FIRE PROTECTION LEGEND

- UPRIGHT QR SPRINKLER HEAD
- PENDANT QR SPRINKLER HEAD
- UPRIGHT SPRINKLER HEAD IN SECTION
- PIPING ELLED DOWN WITH OS&Y VALVE IN PLAN
- OS&Y VALVE IN PLAN WITH HOSE END CONNECTION
- —FOAM— FOAM PIPING
- —TEST— TEST HEADER PIPING
- —CONC— CONCENTRATE PIPING(S.S. PIPING)
- —F— FIRE SPRINKLER PIPING
- —D— DRAIN PIPING
- —R— RELIEF PIPING
- —D/R— DRAIN/RELIEF PIPING
- —S— SURGE ARRESTER PIPING
- FSTRT FOAM START STATION
- FSTOP FOAM STOP STATION (DEAD-MAN TYPE)
- POINT OF CONNECTION
- FLEXIBLE PIPE CONNECTION
- —W— BASE DISTRIBUTION WATER PIPING
- —FM— FEED MAIN PIPING
- FS – FLOW SWITCH
- T – TAMPER SWITCHES
- B – BLUE BEACON

FIRE PROTECTION ABBREVIATIONS

AFF	ABOVE FINISHED FLOOR
AHJ	AUTHORITY HAVING JURISDICTION
DIA	DIAMETER
(E)	EXISTING
ETL	ENGINEERING TECHNICAL LETTER
FACP	FIRE ALARM CONTROL PANEL
FSCP	FOAM SUPPRESSION CONTROL PANEL
FDC	FIRE DEPARTMENT CONNECTION
FW	FOAM WATER PIPING
GPM	GALLONS PER MINUTE
HDBK	HANDBOOK
IAW	IN ACCORDANCE WITH
IRH	INFRARED HEATER
MIL	MILITARY
MIN	MINIMUM
MAX	MAXIMUM
(N)	NEW
OA	OUTSIDE AIR
O/H	OVERHEAD
OS&Y	OUTSIDE SCREW AND YOKE
PIV	POST INDICATOR VALVE
PSI	POUNDS PER SQUARE INCH
SF	SQUARE FOOT
SS	STAINLESS STEEL
TB	THRUST BLOCK
W/	WITH

GENERAL FIRE PROTECTION NOTE

THE DESIGN DRAWINGS AND SPECIFICATIONS FOR THE NEW LOW LEVEL HIGH EXPANSION FOAM FIRE SUPPRESSION SYSTEM FOR HANGAR 456 HAVE BEEN DEVELOPED FROM ETL 02-15 EXCEPT AS MODIFIED BY THE CRITERIA CHANGES DOCUMENT PROVIDED BY AFCEC ON JUNE 16, 2015 AS MODIFICATION-01 TO THIS EXISTING DESIGN BUILD CONTRACT.

PETERSON ENGINEERING INC.
(PROF. ENG. #: 3600)
75 SOUTH "F" STREET
PENSACOLA, FLORIDA 32502
(850) 434-0513

GREGORY D. PETERSON — LICENSED PROFESSIONAL — ENGINEER — 13801 — STATE OF MISSISSIPPI

FINAL SUBMITTAL
FOR CONSTRUCTION

14TH CIVIL ENGINEER SQ
BEST SERVING THE BEST

Symbol	No.	Description	Date	Approved

REVISIONS

Designed By: JOHNSON
Drawn By: VCHULEK
Checked By: JOHNSON
Reviewed By: PETERSON
Date: 06 SEP 2017
File No. .
CADD File Name: .
Solicitation Number: EEPZ 10-1001

COLUMBUS AIR FORCE BASE

HEFFERNAN HOLLAND MORGAN
ARCHITECTURE
312 S. ALCANIZ ST. • PENSACOLA, FL 32502
850.433.2799 • AAC001942 • HHMA.COM

REPAIR MAINTENANCE
HANGAR 456

FIRE PROTECTION LEGEND AND ABBREVIATIONS

Sheet
FP-001

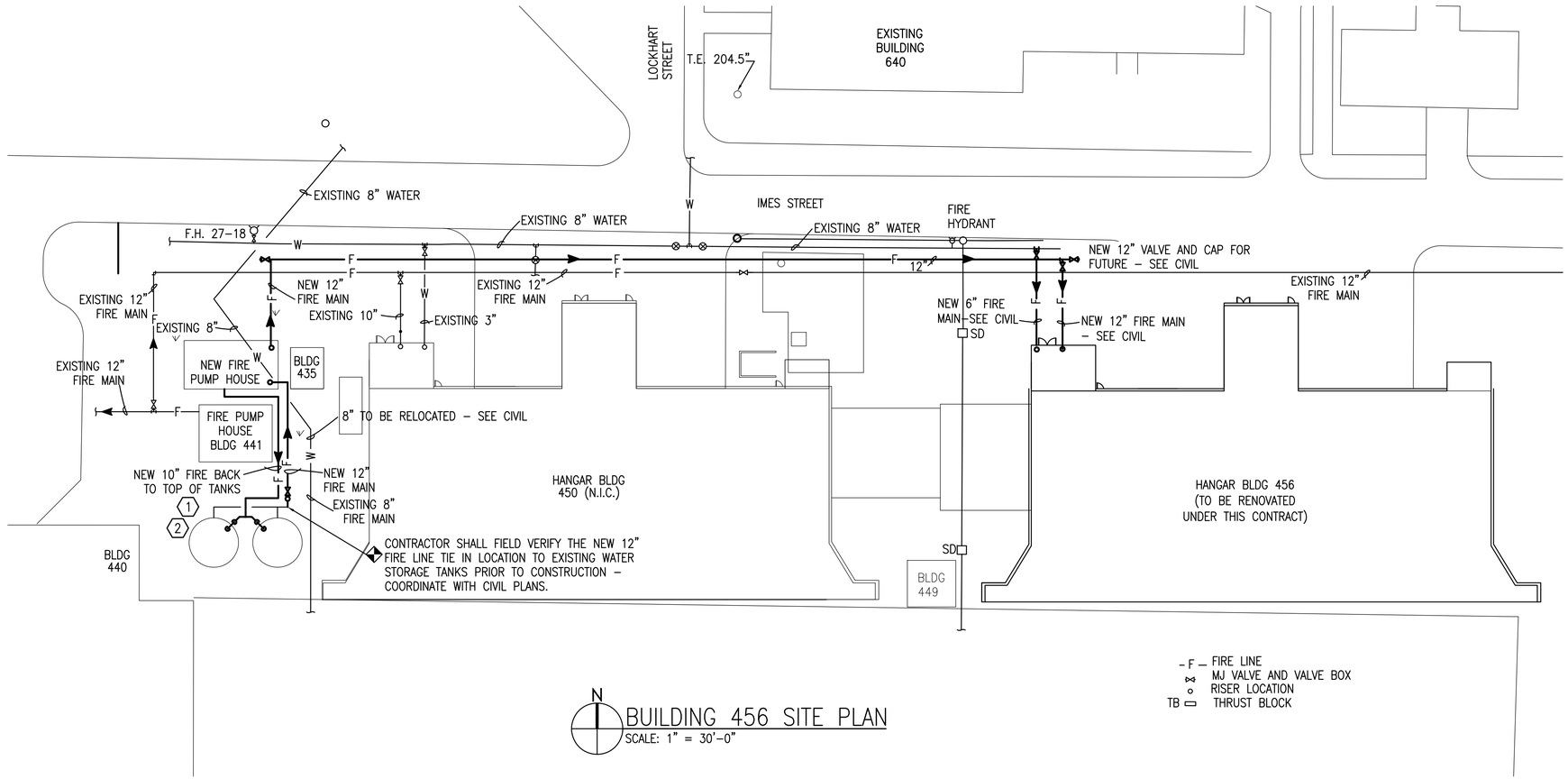

BUILDING 456 SITE PLAN
SCALE: 1" = 30'-0"

BUILDING 456 SITE PLAN NOTES

GENERAL: ALL SITE WORK AND UNDERGROUND UTILITY PLACEMENT IS SHOWN ON AND COORDINATED WITH THE CIVIL DRAWINGS.

1. FIRE SPRINKLER CONTRACTOR SHALL COORDINATE AND INSTALL RETURN PIPING FROM PUMP HOUSE BACK TO STORAGE TANKS. NO VALVES SHALL BE INSTALLED IN EXTERIOR PIPING. DRAIN SHALL BE PROVIDED IN PIPING IN PUMP HOUSE.

2. CONTRACTOR SHALL FIELD VERIFY THE CONDITION OF THE EXISTING WATER STORAGE TANK WALLS AND CONFIRM THAT WALLS ARE STRUCTURALLY SOUND ENOUGH TO ACCEPT THE NEW RETURN WATER PIPING. PROVIDE SHOP DRAWINGS OF THE PROPOSED ATTACHMENTS TO EXISTING WATER STORAGE TANKS FOR APPROVAL PRIOR TO CONSTRUCTION.

PETERSON ENGINEERING INC.
(PROF. ENG. #: 3600)
75 SOUTH "F" STREET
PENSACOLA, FLORIDA 32502
(850) 434-0513

GREGORY D. PETERSON LICENSED PROFESSIONAL ENGINEER 13801 STATE OF MISSISSIPPI

FINAL SUBMITTAL FOR CONSTRUCTION

14TH CIVIL ENGINEER SQ
BEST SERVING THE BEST

Symbol	No.	Description	Date	Approved

REVISIONS

Designed By: JOHNSON
Drawn By: VCHULEK
Checked By: JOHNSON
Reviewed By: PETERSON
Date: 06 SEP 2017
File No. .
CADD File Name: .
Solicitation Number: EEPZ 10-1001

COLUMBUS AIR FORCE BASE

HEFFERNAN HOLLAND MORGAN
ARCHITECTURE
312 S. ALCANIZ ST. • PENSACOLA, FL 32502
850.433.2799 • AAC001942 • HHMA.COM

REPAIR MAINTENANCE HANGAR 456

FIRE PROTECTION SITE PLAN

Sheet
FP-101

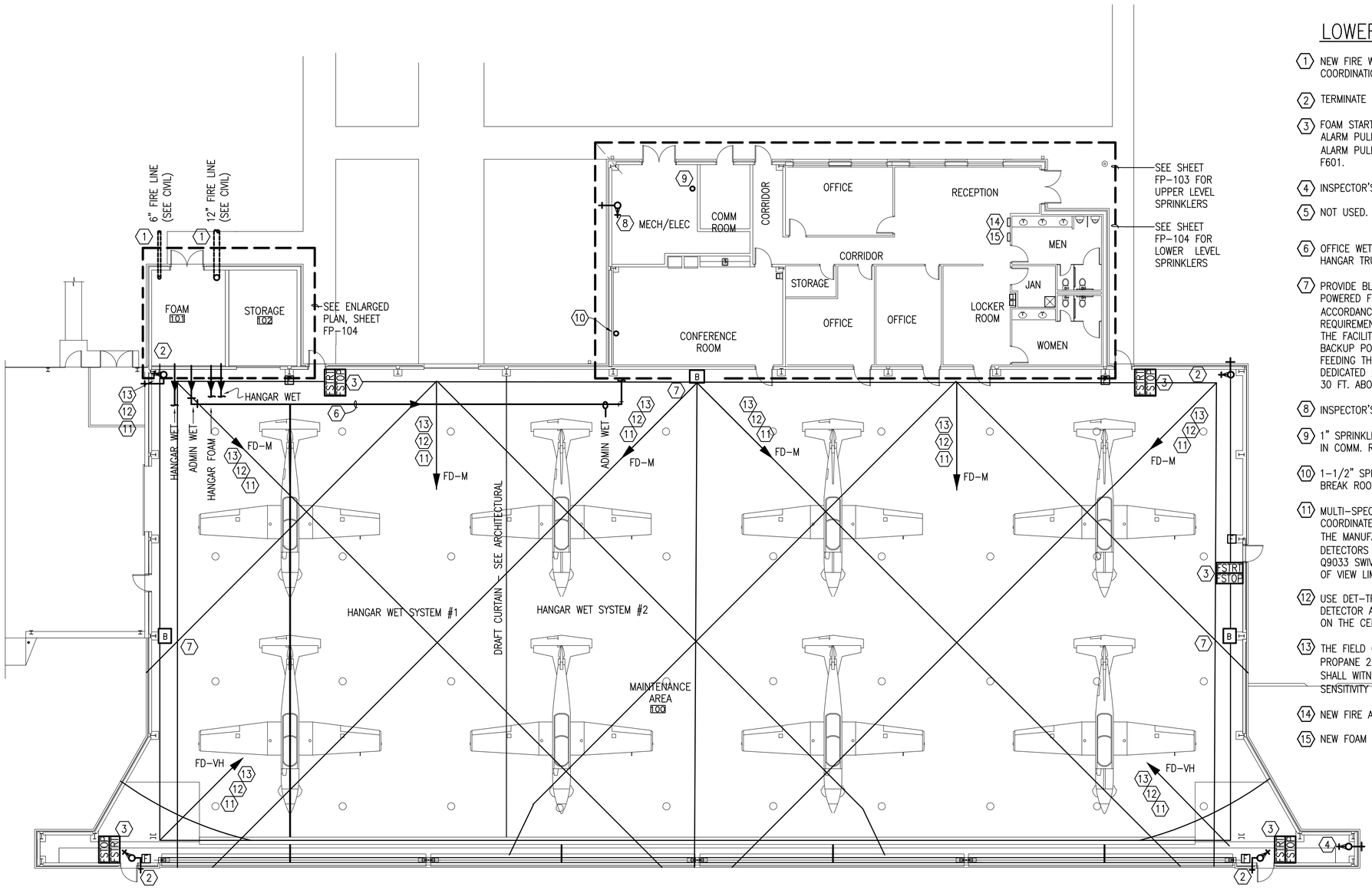

N
PLAN NORTH

N
TRUE NORTH

1
F2 | F2

LOWER LEVEL FLOOR PLAN – NEW WORK

8' 4' 0' 8' 16'

SCALE: 3/32" = 1'-0"

LOWER LEVEL PLAN NOTES:

1. NEW FIRE WATER SUPPLY LINE – SEE CIVIL DRAWINGS FOR COORDINATION.
2. TERMINATE DRAIN PIPING WITH 1" VALVE AND PIPE TO OUTSIDE.
3. FOAM START/STOP STATIONS LOCATED AT SAME EXITS AS FIRE ALARM PULL STATIONS BUT ON OPPOSITE SIDE OF DOOR AS FIRE ALARM PULL STATIONS (5 PLACES) SEE MOUNTING DETAIL, SHEET F601.
4. INSPECTOR'S TEST FOR OVERHEAD WET SYSTEM.
5. NOT USED.
6. OFFICE WET SPRINKLER FEED MAIN FROM FOAM 101, ROUTED IN HANGAR TRUSSES TO LEAN-TO.
7. PROVIDE BLUE BEACONS NOT LESS THAN 400 CANDELA (CD) POWERED FROM A DEDICATED EMERGENCY PANEL PROVIDED IN ACCORDANCE WITH UFC 3-520-01 (SEE ELECTRICAL). THIS REQUIREMENT DOES NOT JUSTIFY AN EMERGENCY GENERATOR FOR THE FACILITY. THE FSCP WILL CONTROL BEACON INITIATION. A BACKUP POWER SUPPLY OR SUPERVISION OF THE POWER SUPPLY FEEDING THE BEACONS IS NOT REQUIRED WHEN FED FROM THE DEDICATED EMERGENCY PANEL. BEACONS SHALL BE MOUNTED 20 – 30 FT. ABOVE THE FLOOR OF THE HANGAR BAY.
8. INSPECTOR'S TEST/DRAIN FOR OVERHEAD ADMIN SPRINKLER SYSTEM.
9. 1" SPRINKLER PIPING DOWN TO SERVE SIDEWALL WITH WIRE GUARD IN COMM. ROOM.
10. 1-1/2" SPRINKLER PIPING DOWN TO SERVE PENDANT HEADS FOR BREAK ROOM AND OFFICE.
11. MULTI-SPECTRUM FLAME DETECTOR (FD) LAYOUT SHALL BE COORDINATED WITH THE SPECIFICATIONS AND RECOMMENDATIONS OF THE MANUFACTURER'S TECHNICAL REPRESENTATIVE. MOUNT FLAME DETECTORS ON THE COLUMNS INDICATED @~10'-0" A.F.F. USING Q9033 SWIVEL MOUNT AND COLLAR ATTACHMENT. INSTALL 10° FIELD OF VIEW LIMITERS ON DETECTORS ALONG COLUMN LINE 1.
12. USE DET-TRONICS Q1201C LASER AIMER AND HOLDER FOR DETECTOR AIMING. VERIFY THE LASER IS ZEROED WITH THE HOLDER ON THE CENTRAL AXIS PRIOR TO AIMING.
13. THE FIELD OF VIEWS (FOV) SHOWN ARE FOR AN X3301 TO A PROPANE 2'x2' JP-5 PAN FIRE. AFCEC OR THIER REPRESENTATIVE SHALL WITNESS TEST. 'FD-VH' DESIGNATION INDICATES VERY HIGH SENSITIVITY AND 'FD-M' INDICATES MEDIUM SENSITIVITY.
14. NEW FIRE ALARM CONTROL PANEL (SEE ELECTRICAL)
15. NEW FOAM SUPPRESSION CONTROL PANEL

PETERSON ENGINEERING INC.
(PROF. ENG. #: 3600)
75 SOUTH "F" STREET
PENSACOLA, FLORIDA 32502
(850) 434-0513

GREGORY D. PETERSON LICENSED PROFESSIONAL ENGINEER 13801 STATE OF MISSISSIPPI

FINAL SUBMITTAL FOR CONSTRUCTION

14TH CIVIL ENGINEER SQ
BEST SERVING THE BEST

Symbol No.	Description	Date	Approved

REVISIONS

Designed By: JOHNSON
Drawn By: VCHULEK
Checked By: JOHNSON
Reviewed By: PETERSON
Date: 06 SEP 2017
File No. .
CADD File Name: .
Solicitation Number: EEPZ 10-1001

COLUMBUS AIR FORCE BASE

HERBERMAN HOLLAND MORGAN
ARCHITECTURE
312 S. ALCANIZ ST. • PENSACOLA, FL 32502
850.433.2799 • AA0001942 • HHMA.COM

REPAIR MAINTENANCE HANGAR 456

LOWER LEVEL FLOOR PLAN

Sheet
FP-102

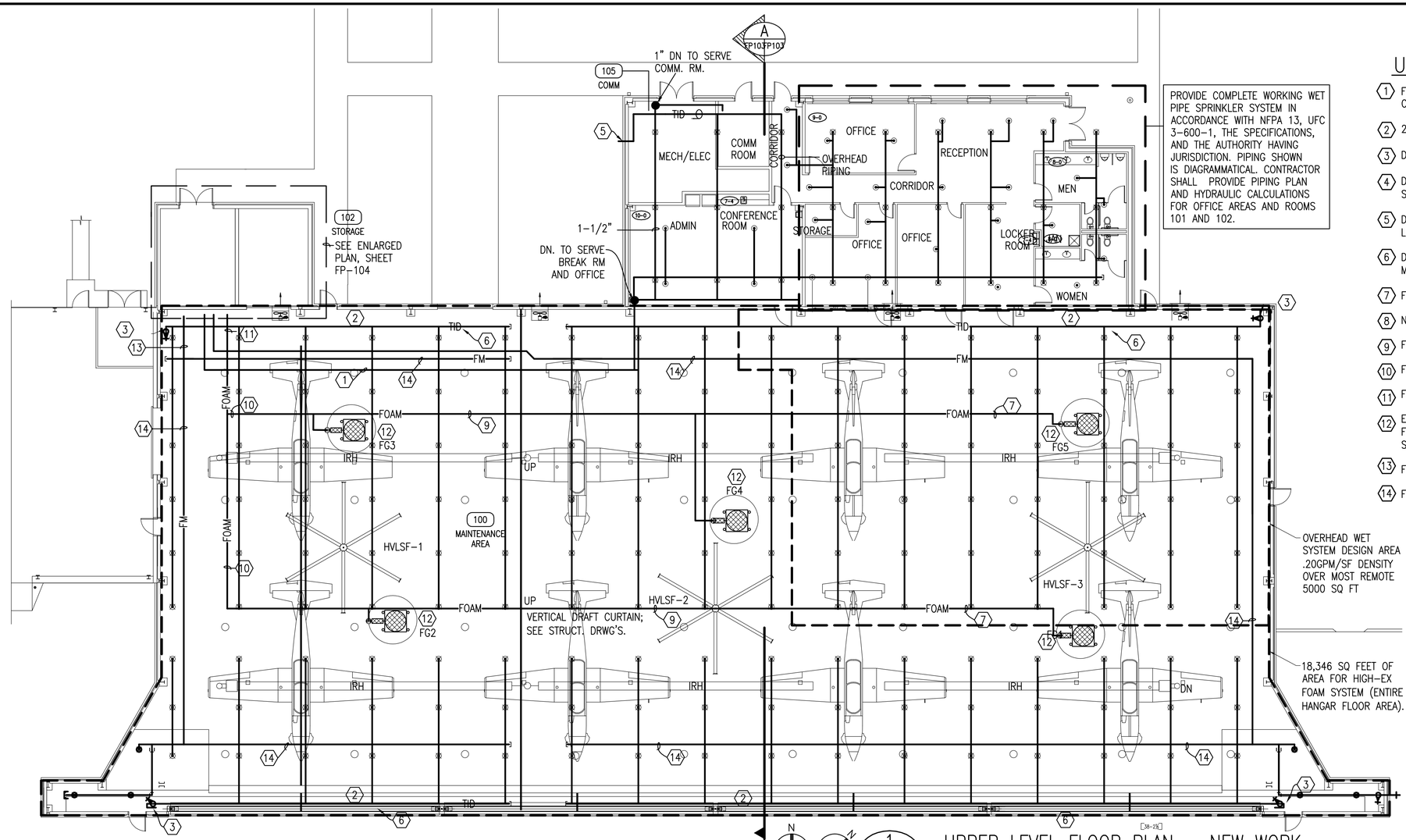

UPPER LEVEL PLAN NOTES:

1. FEED PIPING ROUTED IN TRUSS OVERHEAD TO SERVE OVERHEAD AND FIRST FLOOR OF LEAN-TO.
2. 2" TIE-IN DRAIN PIPING.
3. DOWN TO DRAIN VALVE WITH HOSE END 5'-6" A.F.F.
4. DOWN TO INSPECTOR'S TEST FOR OVERHEAD HANGAR SYSTEM.
5. DOWN TO INSPECTOR'S TEST FOR OVERHEAD LEAN-TO SYSTEM.
6. DOWN TO TEE CONNECTION FROM FEED MAIN(TYPICAL).
7. FOAM PIPING.
8. NOT USED.
9. FOAM PIPING
10. FOAM PIPING
11. FOAM PIPING
12. EACH FOAM GENERATOR PIPE CONNECTION TO HAVE FLEX PIPE CONNECTOR AND UNION (OR FLANGE) & STRAINER; SEE DETAIL, THIS SHEET.
13. FEED MAIN SERVING HANGAR OVERHEAD
14. FEED MAIN SERVING HANGAR OVERHEAD

1 FP103 | FP103 UPPER LEVEL FLOOR PLAN – NEW WORK

PLAN NORTH / TRUE NORTH

8' 4' 0' 8' 16'

SCALE: 3/32" = 1'-0"

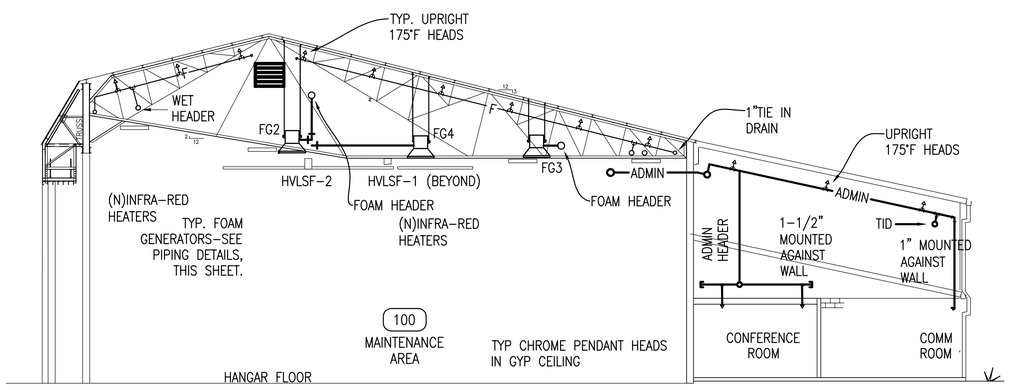

A SP103 | FP103 SECTION

8' 4' 0' 8' 16'

SCALE: 3/32" = 1'-0"

THE SPRINKLER CONTRACTOR SHALL BE EXPECTED TO SUPPORT AS MUCH OF THE OVERHEAD SPRINKLER PIPING AND EQUIPMENT AS POSSIBLE FROM THE ROOF TRUSSES RATHER THAN THE ROOF PURLINS.

THE HANGERS FOR THIS PIPING AND EQUIPMENT SHALL BE SHOWN ON THE SHOP DRAWINGS AND WILL BE REVIEWED FOR COMPATABILITY.

THE SPRINKLER CONTRACTOR SHALL BE EXPECTED TO CONDUCT FIELD VERIFICATION OF THE BUILDING DIMENSIONS AND PROPOSED PIPE ROUTING TO INSURE FINAL SHOP DRAWINGS WILL FIT IN THE SPACE AS REQUIRED. PIPE SIZES AND GENERAL PIPE ROUTING SHOWN SHALL BE ADHERED TO WITH MINOR DEVIATION THAT MAY BE REQUIRED DUE TO FIELD CONDITIONS.

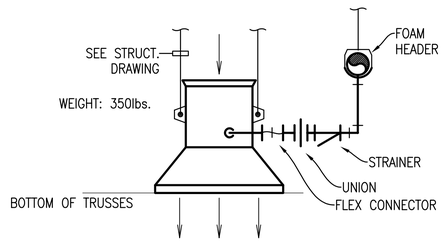

FOAM GENERATOR MOUNTING DETAIL

NO SCALE (TYP., 8 PLACES)

PETERSON ENGINEERING INC.
(PROF. ENG. #: 3600)
75 SOUTH "F" STREET
PENSACOLA, FLORIDA 32502
(850) 434-0513

GREGORY D. PETERSON LICENSED PROFESSIONAL ENGINEER 38011 STATE OF MISSISSIPPI

FINAL SUBMITTAL FOR CONSTRUCTION

14TH CIVIL ENGINEER SQ — BEST SERVING THE BEST

Symbol No.	Description	Date	Approved

REVISIONS

Designed By: JOHNSON
Drawn By: VCHULEK
Checked By: JOHNSON
Reviewed By: PETERSON
Date: 06 SEP 2017
File No. .
CADD File Name: .
Solicitation Number: EEPZ 10-1001

COLUMBUS AIR FORCE BASE

HEFFERNAN HOLLAND MORGAN
ARCHITECTURE
312 S. ALCANIZ ST. • PENSACOLA, FL 32502
850.433.2799 • AAC001942 • HHMA.COM

REPAIR MAINTENANCE HANGAR 456

UPPER LEVEL FLOOR PLAN AND SECTION

Sheet
FP-103

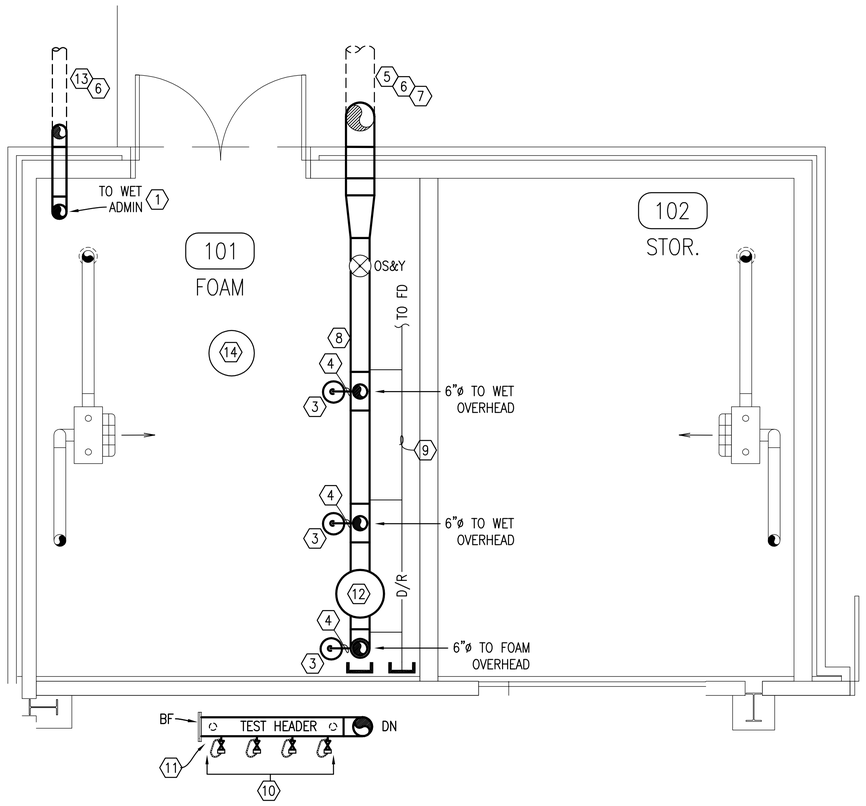

N PLAN NORTH / TRUE NORTH — 1 FP-104 | FP-104

LOWER LEVEL RISER ROOMS FLOOR PLAN–NEW WORK

SCALE: 3/8" = 1'–0"

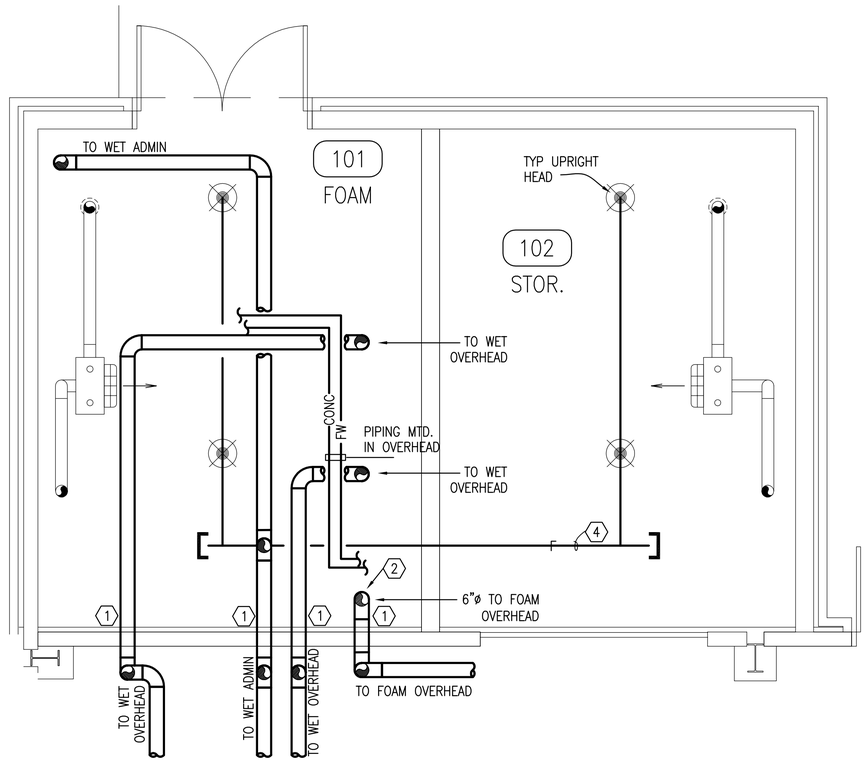

N PLAN NORTH / TRUE NORTH — 2 FP-104 | FP-104

UPPER LEVEL RISER ROOMS FLOOR PLAN–NEW WORK

SCALE: 3/8" = 1'–0"

LOWER LEVEL NOTES:

1. WET RISER SEE FP107.
2. NOT USED
3. (3) 10 GAL. SURGE ARRESTERS PER ETL 02–15 SUPPORTED FROM BAR JOIST.
4. 3" PIPING TO SURGE ARRESTERS.
5. 12" BELOW GRADE WATER SUPPLY FROM FIRE PUMPS – COORDINATE WITH THE CIVIL PLANS.
6. SLEEVES, TIE RODS AND CONCRETE THRUST BLOCKS ON PIPE ENTRY.
7. LONG RADIUS 12" ELL.
8. TYPICAL FLOOR SUPPORTED MAIN.
9. DRAIN/RELIEF PIPING ROUTED TO FLOOR DRAIN.
10. (4)2–½" TEST VALVES WITH CAP AND CHAIN.
11. 8" TEST HEADER MOUNTED ON FLOOR SUPPORT, 3'–0" ABOVE FLOOR.
12. BASKET STRAINER
13. 6" FIRE LINE FROM BASE DOMESTIC WATER – COORDINATE WITH THE CIVIL PLANS.
14. VERTICAL FOAM CONCENTRATE STORAGE TANK.

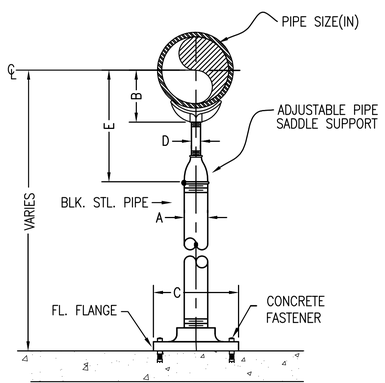

FLOOR PIPE SUPPORT DETAIL

NOT TO SCALE

DIMENSIONS					
PIPE SIZE(IN)	A(IN)	B(IN)	C(IN)	D(IN)	E(IN)
2–1/2	2–1/2	3–7/16	9	1–1/2	8–13
3	2–1/2	3–11/16	9	1–1/2	8¼–13¼
4	3	4–3/16	9	2–1/2	9¼–14
6	3	5–7/16	9	2–1/2	10¼–15½
8	3	6–15/16	9	2–1/2	11¾–16½
10	3	8–7/16	9	2–1/2	13¾–18¾

UPPER LEVEL NOTES:

1. SLEEVE AND FIRE STOP ALL HANGAR WALL PENETRATIONS.
2. FOAM RISER
3. NOT USED.
4. LIGHT HAZARD SPRINKLER PIPING SERVING 175'F UPRIGHT SPRINKLER HEADS AND SERVING ROOMS 101 AND 102.

SYSTEM TESTING

A. SEE SPECIFICATIONS FOR TESTING REQUIREMENTS OF THE FOAM SYSTEM.

MATERIAL SPECIFICATIONS

THE FOLLOWING MATERIALS SHALL BE USED FOR THIS CONTRACT:

1. ABOVE–GROUND SPRINKLER PIPING TO BE SCH 40 BLK STEEL, NO EXCEPTIONS.
2. CONCENTRATE PIPING TO BE STAINLESS STEEL.
3. BELOW GRADE PIPING TO BE CLASS 900 PVC WITH DUCTILE FITTINGS AND PROVIDED WITH TRACER WIRE (COORDINATE WITH CIVIL PLANS).

PETERSON ENGINEERING INC.
(PROF. ENG. #: 3600)
75 SOUTH "F" STREET
PENSACOLA, FLORIDA 32502
(850) 434–0513

GREGORY D. PETERSON — REGISTERED PROFESSIONAL ENGINEER — 13801 — STATE OF MISSISSIPPI

FINAL SUBMITTAL FOR CONSTRUCTION

14TH CIVIL ENGINEER SQ — BEST SERVING THE BEST

Symbol No.	Description	Date	Approved
	REVISIONS		

Designed By: JOHNSON
Drawn By: VCHULEK
Checked By: JOHNSON
Reviewed By: PETERSON
Date: 06 SEP 2017
File No. .
CADD File Name: .
Solicitation Number: EEPZ 10–1001

COLUMBUS AIR FORCE BASE

HERBERMAN HOLLAND MORGAN
ARCHITECTURE
312 S. ALCANIZ ST. • PENSACOLA, FL 32502
850.433.2799 • AA-C001942 • HHMA.COM

REPAIR MAINTENANCE HANGAR 456

RISER ROOM FLOOR PLAN AND DETAILS

Sheet
FP-104

PIPING NOTES:

1. 12" PRESSURIZED WATER SUPPLY; ALL FITTINGS OUT-OF-GROUND TO BE WELDED AND/OR FLANGED DUCTILE IRON FITTINGS.
2. MAIN OS&Y WITH TAMPER SWITCH.
3. WELDED STEEL HEADER.
4. ALL EXTERIOR ABOVE GRADE PIPING SHALL BE HEAT TRACED WITH A LISTED HEAT TRACING AND SUPERVISED IN ACCORDANCE WITH NFPA 13.
5. PRESSURE RELIEF VALVE; RELIEF SETTING OF 150#.(TYP.)
6. 10 GAL. SURGE ARRESTERS PER ETL; 3" STEEL PIPING AS SHOWN.
7. HANGAR OVERHEAD WET RISERS.
8. BASKET STRAINER; LOW PRESSURE DROP SCREEN; TOP ACCESS.
9. NOT USED
10. RELEASE FROM FOAM SYSTEM CONTROL PANEL TO ACTIVATE FOAM FLOW CONTROL VALVES.
11. FOAM RISER TO OVERHEAD FOAM GENERATORS.
12. FOAM SYSTEM TEST PIPING; ALL INSIDE VALVES WITH TAMPER SWITCHES.
13. NOT USED.
14. NOT USED.
15. VERTICAL, DOUBLE-WALLED, HIGH DENSITY CROSS-LINKED POLYETHYLENE STORAGE TANK COMPATIBLE WITH REQUIRED CONCENTRATE WITH TRIM; SEE SPECS.
16. NOT USED.
17. TYPICAL FLOOR PIPE STAND.
18. COMBINED 2" DRAIN/RELIEF HEADER TO ROOM FLOOR DRAIN.
19. TAMPER SWITCHES TO BUILDING FIRE ALARM CONTROL PANEL.
20. FLOW SWITCHES.
21. PROVIDE WET PIPE ALARM CHECK VALVE WITH COMPLETE TRIM INCLUDING DRAIN & RETARD CHAMBER FOR CONNECTION TO WATER MOTOR ALARM.
22. SLEEVE AND FIRE STOP HANGAR WALL PENETRATIONS.
23. FLOW CONTROL VALVE AND PRESSURE REGULATING LINE. (SEE SPECS FOR VALVE & TRIM)
24. INDUCTOR (SIZED BY MANUFACTURER OF FOAM EQUIPMENT). INSTALL INDUCTOR IN THE HORIZONTAL PIPING OVER THE TOP OF THE CONCENTRATE TANK. PROVIDE THE MINIMUM STRAIGHT PIPE ON BOTH SIDES OF THE INDUCTOR IN ACCORDANCE WITH THE MANUFACTURER. INSTALL THESE SECTIONS OF PIPING FREE OF ELBOWS, TEES, AND REDUCERS. PROVIDE LIQUID FILLED GAUGES, LOCATED NO CLOSER THAN 2 FT. BEFORE AND AFTER THE INDUCTOR.
25. SOLUTION TEST VALVE.
26. SYSTEM ISOLATION VALVE.
27. WATER SUPPLY CONTROL VALVE.
28. FOAM CONCENTRATE SHUT OFF VALVE – 1/4 TURN BALL.
29. DOUBLE WALL ATMOSPHERIC STORAGE TANK. NOTE: PRE-PRIMING OF FOAM SOLUTION PIPING IS NOT ACCEPTABLE. ALL FOAM SOLUTION PIPING SHALL BE SLOPED TO SELF-DRAIN BACK TO THE RISER. SEE SPECIFICATIONS.
30. LIQUID FILLED GAUGE WITH SHUT-OFF (TYP. 2).
31. FROM FLOW CONTROL VALVE.
32. TO FOAM SYSTEM.
33. INDUCTOR
34. CHECK VALVE
35. T-FITTING MOUNTED DIRECTLY ABOVE BALL VALVE.
36. SUPERVISED BALL VALVE.
37. ¾" COPPER LINE FORM FIRE WATER SUPPLY WITH BALL VALVE.
38. PROVIDE INSTRUCTIONAL SIGNAGE.
39. BALL VALVE WITH CAP AND TEST CONNECTION.
40. PRESSURE/VACUUM VENT.
41. REVERSE FLOAT LEVEL GAUGE.
42. SUCTION LINE.
43. CURRENT CONCENTRATE LEVEL.
44. SECTION OF DOUBLE WALL POLYETHYLENE CONCENTRATE TANK.
45. 6"CONCRETE PAD.

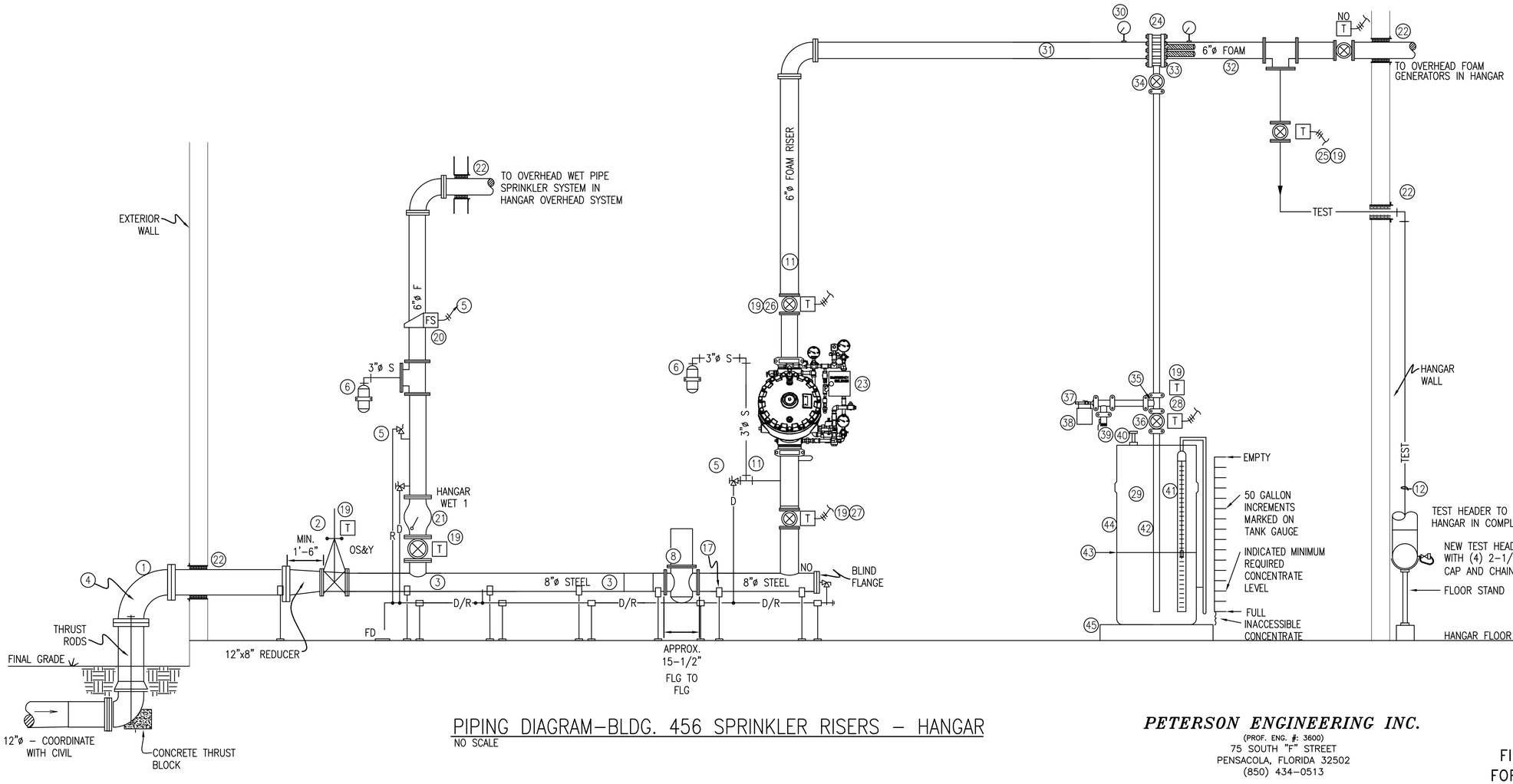

PIPING DIAGRAM-BLDG. 456 SPRINKLER RISERS - HANGAR
NO SCALE

PETERSON ENGINEERING INC.
(PROF. ENG. #: 3600)
75 SOUTH "F" STREET
PENSACOLA, FLORIDA 32502
(850) 434-0513

GREGORY D. PETERSON LICENSED PROFESSIONAL ENGINEER 13801 STATE OF MISSISSIPPI

FINAL SUBMITTAL FOR CONSTRUCTION

14TH CIVIL ENGINEER SQ
BEST SERVING THE BEST

Symbol	No.	Description	Date	Approved
		REVISIONS		

Designed By: JOHNSON
Drawn By: VCHULEK
Checked By: JOHNSON
Reviewed By: PETERSON
Date: 06 SEP 2017
File No. .
CADD File Name: .
Solicitation Number: EEPZ 10-1001

COLUMBUS AIR FORCE BASE

HEFFERNAN HOLLAND MORGAN
ARCHITECTURE
312 S. ALCANIZ ST • PENSACOLA, FL 32502
850.433.2799 • AA-C001942 • HHMA.COM

REPAIR MAINTENANCE HANGAR 456

BUILDING 456 SPRINKLER PIPING DIAGRAMS

Sheet
FP-105

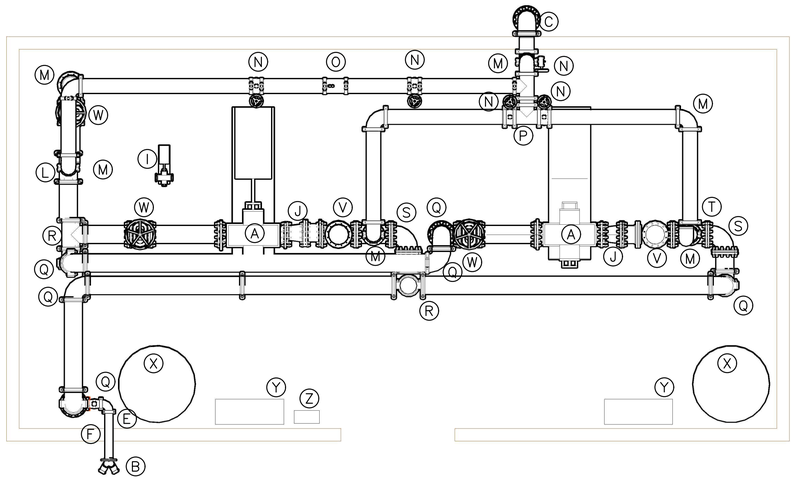

PUMP HOUSE PIPING – PLAN

SCALE: ¼"=1'-0"

N
TRUE NORTH

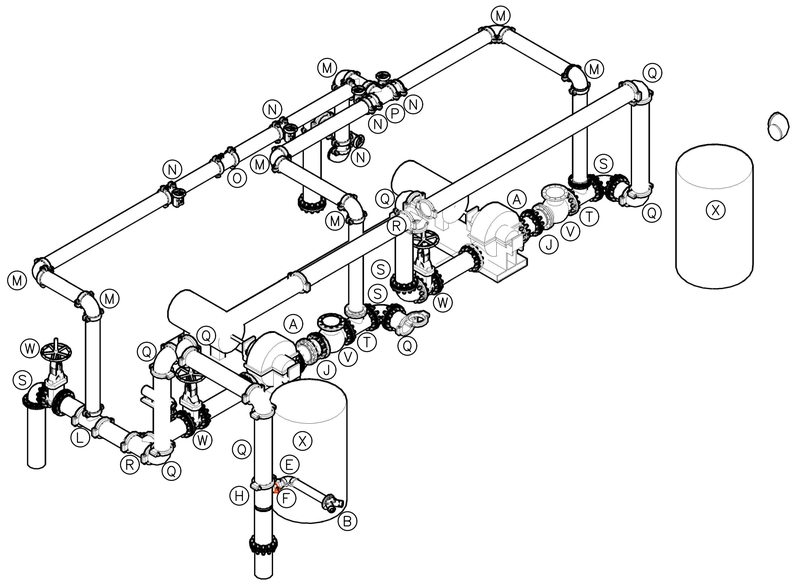

PUMP HOUSE PIPING – ISOMETRIC

SCALE: ¼"=1'-0"

PUMP HOUSE PIPING LEGEND

Legend		
ID		Description
A		10 X 8 HORIZONTAL SPLIT CASE 2000 GPM @ 145 PSI FIRE PUMP
B		FDC RB 4 X 2.5 Y NST
C		FLOW METER DISCHARGE PIPED BACK TO STORAGE TANKS
D		TEST MANIFOLD
E		4" GROOVED COUPLING
F		4" GROOVED 90
G		4" CHECK VALVE
H		10" GROOVED COUPLING
I		JOCKEY PUMP
J		10" X 8" FLANGED REDUCER CON
K		8" GROOVED COUPLING
L		10" X 8" GROOVED TEE
M		8" GROOVED 90
N		8" BF VALVE W/TAMPER
O		8" FLW MTR 1500-3000
P		8" GROOVED TEE
Q		10" GROOVED 90
R		10" GROOVED TEE
S		10" FLANGED ELL
T		10 X 10 X 8 FLANGED TEE
U		NOT USED
V		10" CHECK VALVE F/F
W		10" FLANGED OS&Y VALVE
X		TWO 100 GAL (MIN.) SURGE TANKS – ONE EACH PUMP – MANUFACTURER SHALL ENGINEER SURGE ARRESTER INSTALLATION PER ETL 02-15. CONTRACTOR SHALL SUBMIT DESIGN FOR APPROVAL.
Y		FIRE PUMP CONTROLLER
Z		JOCKEY PUMP CONTROLLER

GENERAL NOTES:

1. THE FIRE SPRINKLER CONTRACTOR SHALL BE REQUIRED TO SUBMIT SHOP DRAWINGS AND PROVIDE HYDRAULIC CALCULATIONS TO SUPPORT SHOP DRAWINGS. THESE DRAWINGS AND CALCULATIONS SHALL BE REVIEWED BY THE AFCEC FIRE SUPPRESSION ENGINEER FOR APPROVAL PRIOR TO CONSTRUCTION.
2. JOCKEY PUMP AND RELATED PIPING TO BE IN ACCORDANCE WITH NFPA#20 AND LOCATION IS TO BE DETERMINED BY THE CONTRACTOR.
3. THE SPRINKLER CONTRACTOR SHALL BE EXPECTED TO SUPPORT AS MUCH OF THE OVERHEAD SPRINKLER PIPING AND EQUIPMENT AS POSSIBLE FROM THE ROOF TRUSSES RATHER THAN THE ROOF PURLINS.
4. THE HANGERS FOR THIS PIPING AND EQUIPMENT SHALL BE SHOWN ON THE SHOP DRAWINGS AND WILL BE REVIEWED FOR COMPATABILITY.

PETERSON ENGINEERING INC.
(PROF. ENG. #: 3600)
75 SOUTH "F" STREET
PENSACOLA, FLORIDA 32502
(850) 434-0513

GREGORY D. PETERSON
LICENSED PROFESSIONAL ENGINEER
13801
STATE OF MISSISSIPPI

FINAL SUBMITTAL
FOR CONSTRUCTION

14TH CIVIL ENGINEER SQ
BEST SERVING THE BEST

Symbol No.	Description	Date	Approved

REVISIONS

Designed By: JOHNSON
Drawn By: VCHULEK
Checked By: JOHNSON
Reviewed By: PETERSON
Date: 06 SEP 2017
File No. .
CADD File Name: .
Solicitation Number: EEPZ 10-1001

COLUMBUS AIR FORCE BASE

HERRERNAN HOLLAND MORGAN
ARCHITECTURE
319 S. ALCANIZ ST. • PENSACOLA, FL 32502
850.433.2799 • AA0001942 • HHMA.COM

REPAIR MAINTENANCE
HANGAR 456

PUMP HOUSE PIPING PLANS

Sheet
FP-106

D:\PROJECTV2014\14166 Design Build Hangar 456 (Columbus, MS)\DWGs\Fire\14166FP106.dwg, 9/13/2017 10:05:20 AM, DWG To PDF.pc3

LEGEND

AHJ	–	AUTHORITY HAVING JURISDICTION
W/	–	WITH
IAW	–	IN ACCORDANCE WITH
MIL	–	MILITARY
HDBK	–	HANDBOOK
AFF	–	ABOVE FINISHED FLOOR
FDC	–	FIRE DEPARTMENT SIAMESE CONNECTION
MIN	–	MINIMUM
MAX	–	MAXIMUM
DIA	–	DIAMETER
OS&Y	–	OUTSIDE SCREW AND YOKE
PIV	–	POST INDICATOR VALVE
PSI	–	POUNDS PER SQUARE INCH
GPM	–	GALLONS PER MINUTE
SQ. FT.	–	SQUARE FOOT
TS		TAMPER SWITCH
FS		FLOW SWITCH

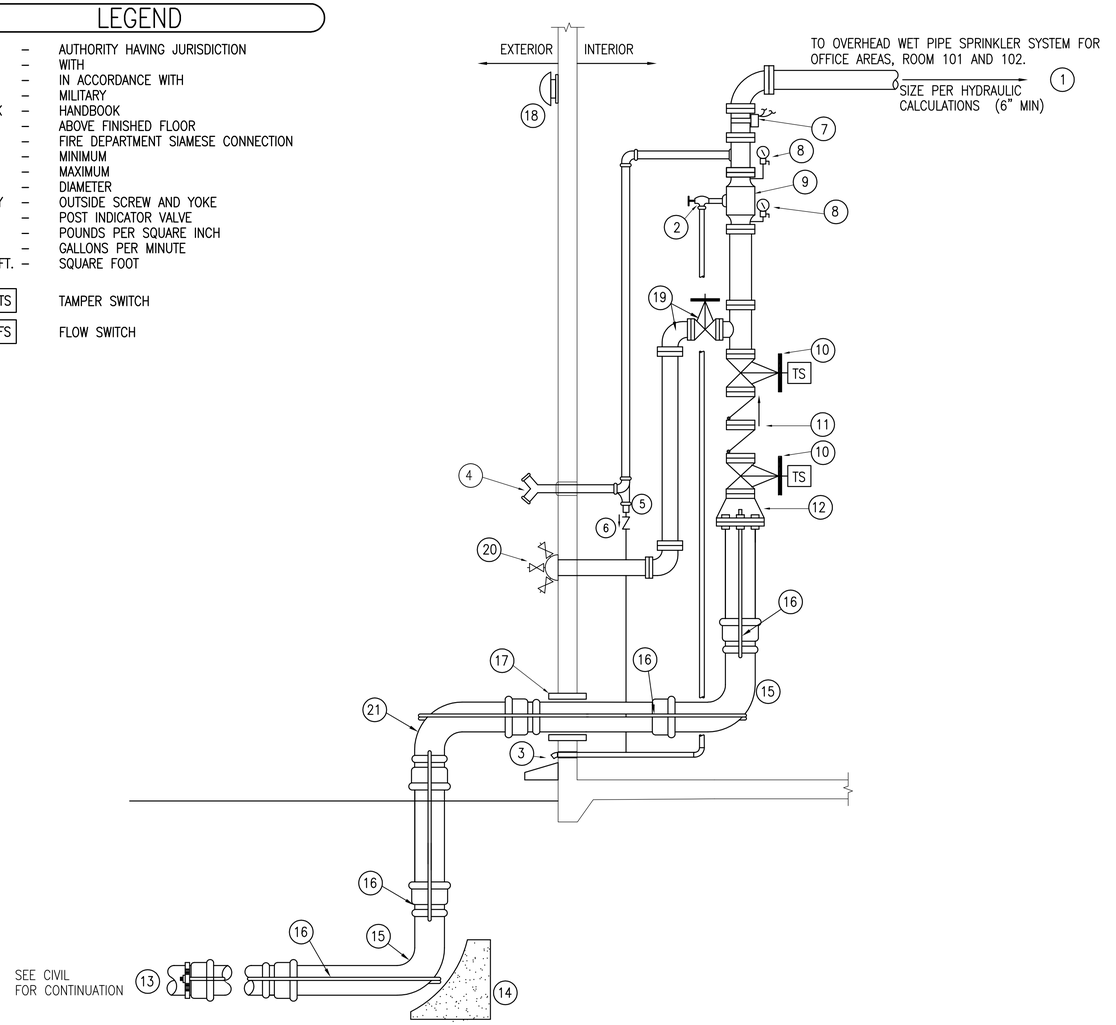

AUTOMATIC WET SYSTEM FIRE RISER SCHEMATIC

N.T.S.

NOTE:

RISER SHALL BE DRAWN TO SCALE ON SHOP DRAWINGS TO REFLECT COMPONENTS SUPPLIED.

WET PIPE EQUIPMENT

1. INSPECTOR'S TEST STATION WITH VALVE, LOCATE AT HYDRAULICALLY MOST REMOTE LOCATION AS PER CALCULATIONS.
2. PROVIDE RISER CHECK VALVE ASSEMBLY WITH MAIN DRAIN VALVE AND PIPING.
3. SPILL DRAIN TO CONCRETE SPLASH BLOCK
4. 4" TO 4"x2-1/2"x2-1/2" CHROME PLATED SIAMESE CONNECTION WITH CAP AND CHAIN. PROVIDE COLLAR LABELED "FDC", SEE PLAN FOR LOCATION.
5. BALL DRIP (PLUMB TO DISCHARGE OUTSIDE OF BUILDING)
6. CHECK VALVE
7. FLOW SWITCH SHALL BE LOCATED A MINIMUM OF 6" UPSTREAM OF ELBOW, IN ACCORDANCE WITH MANUFACTURER'S PRINTED INSTRUCTIONS. (TIE-IN TO BLDG. ALARM)
8. PRESSURE GAGE W/COCK
9. WET PIPE ALARM IN VALVE. MOUNT SO BOTTOM FLANGE IS NO HIGHER THAN 5' AFF
10. OS&Y GATE VALVE W/ TAMPER SWITCH
11. DOUBLE CHECK BACKFLOW PREVENTOR
12. REDUCER AS REQUIRED
13. 6"(MIN) MAIN. PIPING SHALL BE DUCTILE IRON TO 5' FROM BLDG.
14. THRUST BLOCK
15. DUCTILE IRON PIPE, 10" MIN.
16. TIE RODS
17. SLEEVE AND SEAL WITH WATERPROOF FIRE RESISTANT CAULKING
18. WATER MOTOR GONG
19. PROVIDE VALVE AND PIPING FOR FORWARD FLOW BFP TEST. PIPING VALVES AND FITTINGS SHALL MATCH BFP SIZE.
20. BACKFLOW PREVENTER TEST HEADER. PIPE BFP TEST PIPING TO TEST HEADER ON EXTERIOR WALL. PROVIDE COLLAR LABELED "TEST HEADER". PROVIDE CAPS AND CHAINS ON TEST PORTS.
21. ALL EXTERIOR ABOVE GRADE PIPING SHALL BE HEAT TRACED WITH A LISTED HEAT TRACING AND SUPERVISED IN ACCORDANCE WITH NFPA 13.

PETERSON ENGINEERING INC.
(PROF. ENG. #: 3600)
75 SOUTH "F" STREET
PENSACOLA, FLORIDA 32502
(850) 434-0513

GREGORY D. PETERSON LICENSED PROFESSIONAL ENGINEER 13801 STATE OF MISSISSIPPI

FINAL SUBMITTAL
FOR CONSTRUCTION

14TH CIVIL ENGINEER SQ
BEST SERVING THE BEST

Symbol No.	Description	Date	Approved
	REVISIONS		

Designed By: JOHNSON
Drawn By: VCHULEK
Checked By: JOHNSON
Reviewed By: PETERSON
Date: 06 SEP 2017
File No. .
CADD File Name: .
Solicitation Number: EEPZ 10-1001

COLUMBUS AIR FORCE BASE

HEFFERNAN HOLLAND MORGAN
ARCHITECTURE
319 S.ALCANIZ ST.● PENSACOLA, FL 32502
850.433.2799 ● AA-C001942 ● HHMA.COM

REPAIR MAINTENANCE HANGAR 456

BUILDING 456
SPRINKLER PIPING DIAGRAMS

Sheet
FP-107

NEW FIRE PUMP BLDG PUMP SCHEDULE

MARK	SERVICE	TYPE	SIZE	PERFORMANCE DATA				ELECTRICAL DATA				REMARKS
				CAPACITY GPM	HEAD PSI	MAXIMUM SPEED – RPM	MINIMUM EFFICIENCY (%)	MAXIMUM MOTOR – H.P.	VOLTS	PHASE	HERTZ	
FP–1	FIRE WATER	HSC	10x8	2000	155	1800	–	250	460	3	60	–
FP–2	FIRE WATER	HSC	10x8	2000	155	1800	–	250	460	3	60	–
FJP–1	JOCKEY PUMP	–	–	20	165	3600	–	5	460	3	60	–

NOTES:
FP–1 AND FP–2 SHALL BE HOROZONTAL SPLIT CASE WITH ELECTRIC DRIVER.
CONTROLLER SHALL BE SOFT START.
SUCTION AND DISCHARGE SIZES ARE THE MINIMUM ACCEPTABLE.
SUCTION PRESSURE 10# WITH FULL STORAGE.
FJP–1 SHALL HAVE TEFC MOTOR.

PROVIDE STAINLESS STEEL DRAIN PANS ON ALL BASE MOUNTED PUMPS. PIPE DRAINS TO FLOOR DRAIN.

PUMPS TO BE PROVIDED WITH MECHANICAL SEAL UNLESS NOTED OTHERWISE.

HSC – HORIZONTAL SPLIT CASE
ESF – END SUCTION, FRAME MOUNTED CENTRIFUGAL PUMP
IL – IN–LINE

FOAM GENERATOR SCHEDULE

MARK	TYPE	PERFORMANCE				PROPORTIONING SYSTEM	REMARKS
		APPROX. EXP. RATIO	APPROX. INLET PRESS.*	CFM(EA)	TYPE FOAM ALLOWED		
FG–1 FG–2 FG–3 FG–4 FG–5	WATER POWERED VERT. DISCHARGE	911:1	50	14491	(Hi–EX®) 2%	BFZ FOAM INDUCTER SYSTEM	ANSUL GENERATOR JET–X–15A

* ALL SCHEDULED SIZES DEPEND ON FINAL HYDRAULIC CALCULATIONS AS PERFORMED BY SPRINKLER CONTRACTOR.

CONCENTRATE TANK SCHEDULE*

TYPE	MATERIAL	CAPACITY	REMARKS
VERTICAL DOUBLE WALLED PRESSURE TANK	HIGH DENSITY CROSS–LINKED POLYETHYLENE	200 GAL.	SEE DETAILS FOR MISC. PIPE FITTINGS REQUIRED;

*NOTE: PER ETL, ONLY HI–EX® CONCENTRATE CAN BE USED

HANGAR SPRINKLER DESIGN CRITERIA

CLASSIFICATION	MAX. PROTECTION AREA PER HEAD	MAX. HEAD SPACING	DESIGN DENSITY GPM/SQ. FT.	DESIGN AREA SQ. FT.	OUTSIDE HOSE ALLOWANCE	REMARKS
SPECIAL HAZARD AIRCRAFT HANGAR a. WET OVERHEAD	130 SQ. FT.	15'	0.2	5000	NOT REQ'D SINCE THIS IS A TANK FEED SYSTEM	ENGR. TECH. LTR. ETL 02–15 DTD. 3 DEC. 2002
b. LOW LEVEL HIGH EXPANSION FOAM	SEE NOTE BELOW	N/A	3.28' IN 4 MIN.	COVERAGE TO INCLUDE ENTIRE HANGAR AREA		DESIGN PER ETL 02–15 EXCEPT AS MODIFIED BY NEW AFCEC REQUIREMENTS.

NOTE: PER ETL 02–15, LOW LEVEL HIGH EXPANSION FOAM SYSTEMS MUST COVER 90 PERCENT OF THE AIRCRAFT SILHOUETTE AS PROJECTED ON THE FLOOR IN ONE MINUTE OF LESS. THE AREA UNDER THE ENGINES EXTENDING BEYOND THE WING EDGE AND UNDER THE REAR ELEVATORS DOES NOT HAVE TO BE CONSIDERED IN THE AIRCRAFT'S SILHOUETTE AREA.

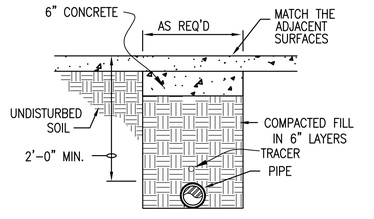

TRENCH DETAIL IN ROADWAY
NOT TO SCALE

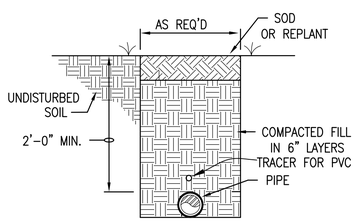

TRENCH DETAIL IN SOIL
NOT TO SCALE

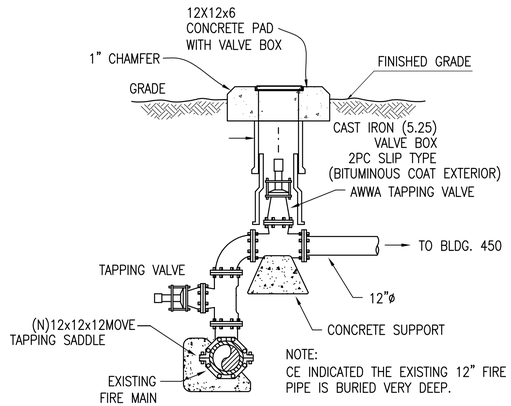

WET TAP VALVE DETAIL
NOT TO SCALE

FLOW TEST DATA

PRESSURE HYDRANT		FLOW HYDRANT
STATIC	RESIDUAL	GPM
63	60	1266

FLOW TEST CONDUCTED BY FIRELINE FIRE PROTECTION AND WITNESSED BY PETERSON ENGINEERING, INC. ON JUNE 16, 2015 AT 12:00PM.

FIRE PROTECTION DESIGN CRITERIA

THE FIRE SUPPRESSION CONTRACTOR SHALL SUBMIT HYDRAULIC CALCULATIONS IN ACCORDANCE WITH THE SPECIFICATIONS FOR APPROVAL PRIOR TO BEGINNING CONSTRUCTION. PUMP MOTOR SIZING SHALL BE CONFIRMED BASED ON APPROVAL OF HYDRAULIC CALCULATIONS PERFORMED BY COMPUTER SOFTWARE.

DESIGN WET PIPE SYSTEM USING THE AREA/DENSITY METHOD OF NFPA 13, EXCEPT THE DESIGN DENSITY, DESIGN AREA, HOSE STREAM ALLOWANCE AND DURATION OF SUPPLY REQUIREMENTS FOR NON–STORAGE OCCUPANCIES MUST BE IN ACCORDANCE WITH FM GLOBAL LOSS PREVENTION DATA SHEET 3–26, FIRE PROTECTION WATER DEMAND FOR NON–STORAGE SPRINKLERED PROPERTIES TABLES 1 THROUGH 4, INCLUDING THE REVISED TABLE 2 IN FM ENGINEERING BULLETIN 04–12.

NAME OF FACILITY: HANGAR 456
LOCATION: COLUMBUS AIR FORCE BASE, MS
TYPE OF CONSTRUCTION: NON–COMBUSTIBLE
OWNER: AIR FORCE
AUTHORITY HAVING JURISDICTION: AIR FORCE
RESTROOM AND OFFICE HAZARD: HC–1
STORAGE, MECHANICAL, COMM, SERVER, HAZARD: HC–2

HYDRAULIC DESIGN CRITERIA (ADMIN WET)

NFPA–13 AND UFC–3–600–01 – HC–1 WET SYSTEM
REMOTE AREA: 1500 SQ.FT.
MAXIMUM AREA PER SPRINKLER: 225 SQ.FT.
MINIMUM WATER FLOW DENSITY: 0.10 GPM/SQ.FT.

NFPA–13 AND UFC–3–600–01 – HC–2 WET SYSTEM
REMOTE AREA: 2500 SQ.FT.
MAXIMUM AREA PER SPRINKLER: 130 SQ.FT.
MINIMUM WATER FLOW DENSITY: 0.15 GPM/SQ.FT.

HOSE STREAM ALLOWANCE
INSIDE HOSE: 0 GPM
OUTSIDE HOSE: 500 GPM

GENERAL FIRE PROTECTION NOTE

THE DESIGN DRAWINGS AND SPECIFICATIONS FOR THE NEW LOW LEVEL HIGH EXPANSION FOAM FIRE SUPPRESSION SYSTEM FOR HANGAR 456 HAVE BEEN DEVELOPED FROM ETL 02–15 EXCEPT AS MODIFIED BY THE CRITERIA CHANGES DOCUMENT PROVIDED BY AFCEC ON JUNE 16, 2015 AS MODIFICATION–01 TO THIS EXISTING DESIGN BUILD CONTRACT.

PETERSON ENGINEERING INC.
(PROF. ENG. #: 3600)
75 SOUTH "F" STREET
PENSACOLA, FLORIDA 32502
(850) 434–0513

GREGORY D. PETERSON — REGISTERED PROFESSIONAL ENGINEER — 13801 — STATE OF MISSISSIPPI

FINAL SUBMITTAL FOR CONSTRUCTION

14TH CIVIL ENGINEER SQ — BEST SERVING THE BEST

REVISIONS

Symbol	No.	Description	Date	Approved

Designed By: JOHNSON
Drawn By: VCHULEK
Checked By: JOHNSON
Reviewed By: PETERSON
Date: 06 SEP 2017
File No. .
CADD File Name: .
Solicitation Number: EEPZ 10–1001

COLUMBUS AIR FORCE BASE
HEFFERNAN HOLLAND MORGAN
ARCHITECTURE
312 S. ALCANIZ ST. • PENSACOLA, FL 32502
850.433.2799 • AAC001942 • HHMA.COM

REPAIR MAINTENANCE HANGAR 456

FIRE PROTECTION SCHEDULES, DETAILS AND LEGEND

Sheet
FP–601

SEQUENCE OF OPERATION.

THE FOAM SUPPRESSION SYSTEM SHALL BE RELEASED BY ONE OR MORE OF THE FOLLOWING:

1. ACTIVATION OF A MANUAL FOAM START STATION.

2. DETECTION BY TWO CROSS ZONED OPTICAL FLAME DETECTORS IN THE HANGAR BAY.

FOAM RELEASE SHALL BE INTERRUPTED BY FOAM STOP STATIONS OF THE 'DEADMAN' TYPE. SEE SPECIFICATIONS. THE STOP STATIONS MUST BE USED IN CONJUNCTION WITH VALVES AND EQUIPMENT THAT WILL PROHIBIT OR STOP THE DISCHARGE OF FOAM/WATER FROM THE FOAM SUPPRESSION SYSTEM.

ONCE DEPRESSED, AND SO LONG AS THE BUTTON IS HELD DOWN, THE STOP STATION WILL PREVENT/STOP DISCHARGE FROM THE FOAM SYSTEM REGARDLESS OF WHETHER OR NOT THE FOAM SYSTEM WAS ACTIVATED AUTOMATICALLY OR MANUALLY AND WHETHER OR NOT THE ACTIVATION OCCURS PRIOR TO OR AFTER THE STOP STATION IS PRESSED AND HELD. UNLESS THE FOAM SYSTEM CONTROL PANEL (FSCP) HAS BEEN RESET AND ALL ACTIVATION ALARMS (MANUAL AND AUTOMATIC) HAVE BEEN CLEARED; WHEN THE FOAM STOP STATION BUTTON IS RELEASED, THE FSCP WILL RESTORE THE FOAM DISCHARGE. WHEN THE FOAM STOP STATION BUTTON IS DEPRESSED UNDER FULL FLOW, THE TIME TO FULLY CLOSE THE FLOW CONTROL VALVE WILL NOT EXCEED 15 SECONDS. THE TIME FOR THE FLOW CONTROL VALVE TO FULLY OPEN UPON RELEASE OF THE FOAM STOP STATION BUTTON WILL NOT EXCEED 5 SECONDS.

Air Force RSFACU Functional Matrix

	ANNUNCIATION AT LOCAL PANEL			NOTIFICATION					AUXILARY FUNCTIONS			
ALARM CONDITIONS	AUDIO-VISUAL ALARM INDCATION	AUDIO-VISUAL TROUBLE INDICATION	AUDIO-VISUAL SUPERVISORY INDICATION	GENERAL FIRE ALARM SIGNAL TO FACU AND RECEIVING STATION	FOAM/WATER RELEASE SIGNAL TO FACU AND RECEIVING STATION	COMMON FOAM/WATER TROUBLE SIGNAL TO FACU AND RECEIVING STATION	COMMON FOAM/WATER SUPERVISORY SIGNAL TO FACU AND RECEIVING STATION	ENABLBE BLUE BEACONS IN HANGAR BAY	OPEN FLOW CONTROL VALVE FOR FOAM/WATER SYSTEM	CLOSE FLOW CONTROL VALVE FOR FOAM/WATER SYSTEM	RE-OPEN FLOW CONTROL VALVE FOR FOAM/WATER SYSTEM IF STILL IN ALARM	RELEASE PRE-ACTION SPRINKLER SYSTEM (IF PROVIDED)
MANUAL FOAM RELEASING STATION	X				X			X	X			
ONE OPTICAL FLAME DETECTOR WITHIN THE PROTECTED ZONE	X			X				X				
TWO SIMULTANEOUS OPTICAL FLAME DETECTORS WITHIN THE PROTECTED ZONE	X				X			X	X			
PRESSURE SWITCH ON FOAM/WATER RISER *	X				X			X				
DEPRESS FOAM STOP STATION BUTTON			X				X			X		
RELEASE FOAM STOP STATION BUTTON											X	
HEAT DETECTION IN THE HANGAR BAY (IF PROVIDED)	X			X								X
TROUBLE CONDITIONS												
COMMON TROUBLE						X						
SUPERVISORY CONDITIONS												
COMMON SUPERVISORY							X					

* DO NOT RELEASE THE FLOW CONTROL VALVE FROM THE PRESSURE SWITCH.

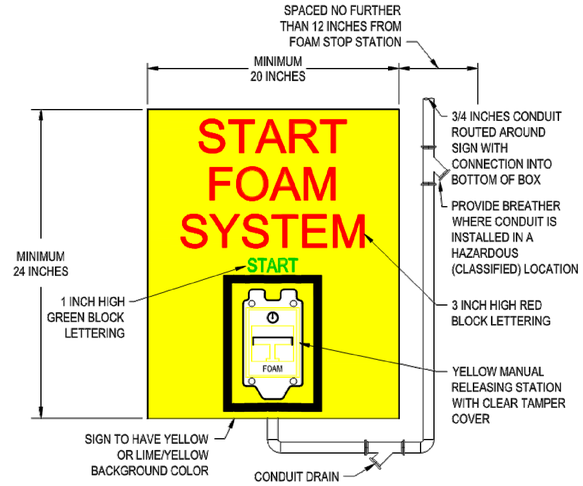

FOAM MANUAL START / STOP PULL STATION SIGNAGE DETAIL

NO SCALE

NOTE: TYPICAL, SEE PLAN FOR LOCATIONS; SEE SPECIFICATIONS FOR FURTHER DETAILS.

PETERSON ENGINEERING INC.
(PROF. ENG. #: 3600)
75 SOUTH "F" STREET
PENSACOLA, FLORIDA 32502
(850) 434-0513

GREGORY D. PETERSON — LICENSED PROFESSIONAL ENGINEER — 13801 — STATE OF MISSISSIPPI

FINAL SUBMITTAL
FOR CONSTRUCTION

14TH CIVIL ENGINEER SQ — BEST SERVING THE BEST

Symbol	No.	Description	Date	Approved
		REVISIONS		

Designed By: JOHNSON
Drawn By: VCHULEK
Checked By: JOHNSON
Reviewed By: PETERSON
Date: 06 SEP 2017
File No. .
CADD File Name: .
Solicitation Number: EEPZ 10-1001

COLUMBUS AIR FORCE BASE

HEFFERNAN HOLLAND MORGAN
ARCHITECTURE
312 S. ALCANIZ ST. • PENSACOLA, FL 32502
850.433.2799 • AAC001942 • HHMA.COM

REPAIR MAINTENANCE HANGAR 456

FIRE PROTECTION CONTROL DIAGRAMS

Sheet
FP-701
Sheet of

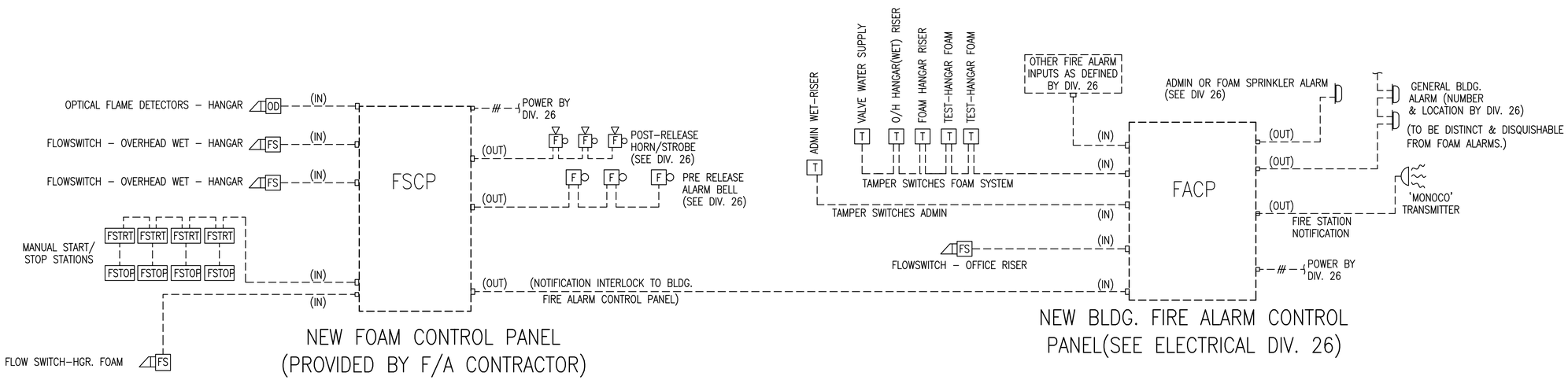

SPRINKLER CONTROL DIAGRAM

NO SCALE

BUILDING FIRE ALARM CONTROL PANEL NOTES:

1. THE BFACP SHALL RECEIVE INPUTS FROM:
   - 1.1. WET PIPE FLOW SWITCHES(BOTH HGR OVER'HD & ADMIN WET SYSTEM).
   - 1.2. THE FOAM CONTROL PANEL.
   - 1.3. THE VARIOUS TAMPER SWITCHES.
   - 1.4. OTHER INPUTS AS IDENTIFIED BY DIV. 26;
2. THE BFACP SHALL PROVIDE BOTH A LOCAL ALARM AND REMOTE NOTIFICATION(SEE DIV. 26).

NOTE:

THE BUILDING ALARM SYSTEMS, I.E. THE FOAM PRE AND POST RELEASE PLUS THE BUILDING GENERAL FIRE ALARM SHALL BE DISTINGUISHABLY DIFFERENT FROM EACH OTHER.

PETERSON ENGINEERING INC.
(PROF. ENG. #: 3600)
75 SOUTH "F" STREET
PENSACOLA, FLORIDA 32502
(850) 434–0513

GREGORY D. PETERSON
LICENSED PROFESSIONAL
ENGINEER
138014
STATE OF MISSISSIPPI

FINAL SUBMITTAL
FOR CONSTRUCTION

14TH CIVIL ENGINEER SQ
BEST SERVING THE BEST

Symbol No.	Description	Date	Approved
	REVISIONS		

Designed By: JOHNSON
Drawn By: VCHULEK
Checked By: JOHNSON
Reviewed By: PETERSON
Date: 06 SEP 2017
File No. .
CADD File Name: .
Solicitation Number: EEPZ 10–1001

COLUMBUS AIR FORCE BASE

HEFFERNAN HOLLAND MORGAN
ARCHITECTURE
312 S.ALCANIZ ST.● PENSACOLA, FL 32502
850.433.8799 ● AAC001942 ● HHMA.COM

REPAIR MAINTENANCE
HANGAR 456

FIRE PROTECTION
CONTROL DIAGRAMS

Sheet
FP-702
Sheet of

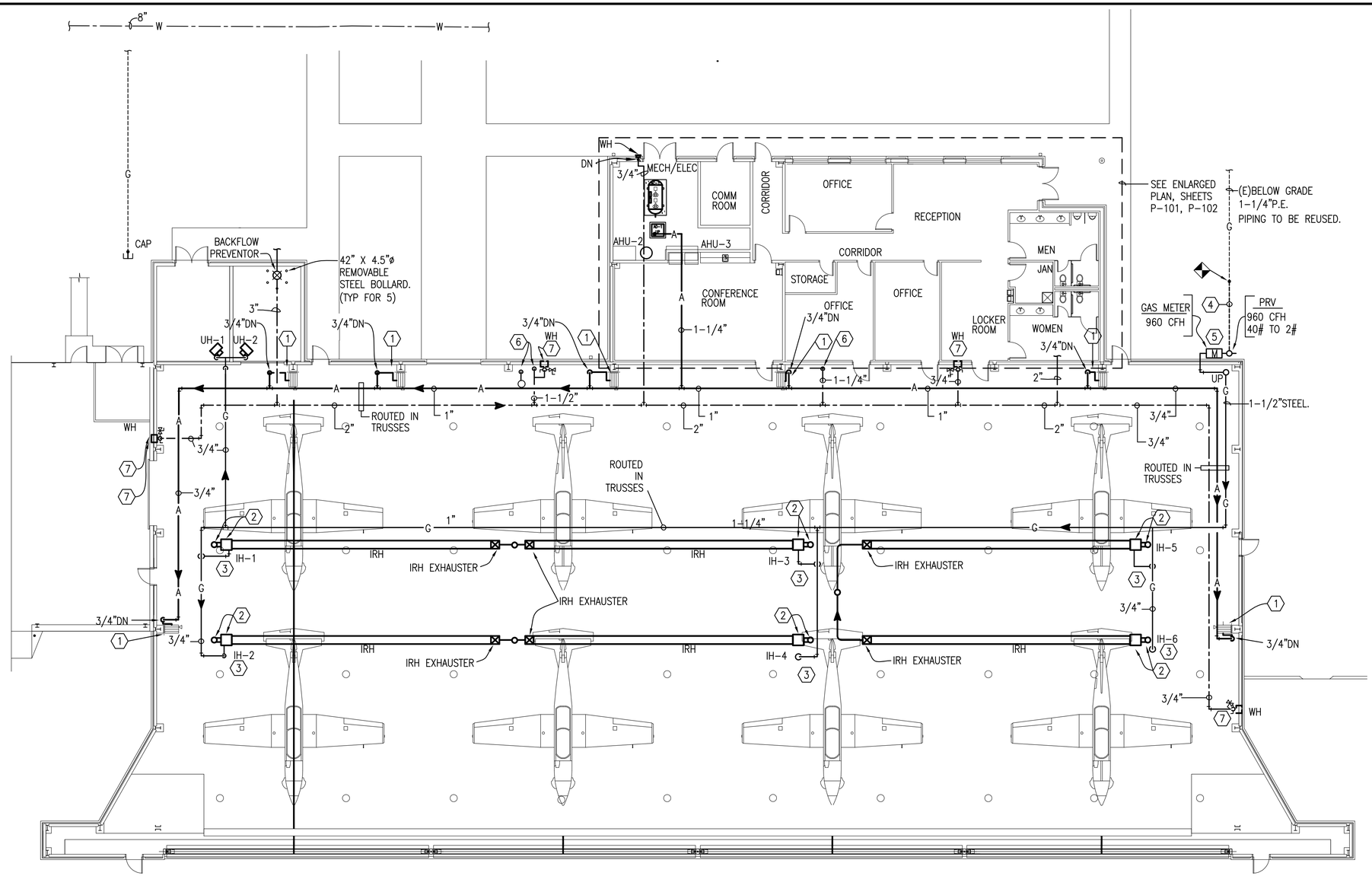

PLUMBING NOTES:

1. WALL MOUNTED HOSE REEL WITH 50LF OF 1/2" HOSE AND STATIC QUICK CONNECT; SEE DETAIL, SHT. P-100.
2. INFRA-RED CONTROLLER BOX WITH 1/2" GAS CONNECTION.
3. SEE TYPICAL GAS PIPING CONNECTION DETAIL TO INFRA-RED HEATERS; SHEET P-501; TYP. 6 PLACES.
4. EXTEND THE EXISTING 1-1/4" BELOW GRADE PE PIPING TO THE NEW METER LOCATION.
5. SEE METER INSTALLATION DETAIL, SHT. P-501.
6. FLOOR MOUNTED EMERGENCY EYEWASH/SHOWER(TWO PLACES); SEE DETAIL, SHEET P-502.
7. EXTERIOR FREEZE PROOF WALL HYDRANTS W/ INTERIOR BALL VALVE WITH HOSE END AND ACCESSIBLE SHUTOFF VALVE IN THE RISER; SEE DETAIL SHEET P-502.

EXTERIOR SITE PIPING:

1. REFER TO THE CIVIL PLANS FOR ALL PIPING INSTALLED ON THE BUILDING EXTERIOR.

N
PLAN NORTH
TRUE NORTH

NEW WORK FLOOR PLAN

SCALE: 3/32" = 1'-0"

10' 0 10' 20'

3/32"= 1'-0"

NOTE:

1. 2 PSI GAS PIPING SHALL BE USED IN THE INTERIOR OF HANGAR 456. EACH POINT OF USE TO BE REDUCED TO 1/2 PSI. ALL ABOVE GRADE GAS PIPING TO BE SCH. 40 STEEL, CLEANED AND PAINTED YELLOW AND LABELED EVERY 10 FOOT ON CENTER. ALL GAS PIPING AND WORK SHALL BE IN COMPLIANCE WITH NFPA 54 AND THE INTERNATIONAL FUEL GAS CODE.

PETERSON ENGINEERING INC.
(PROF. ENG. #: 3600)
75 SOUTH "F" STREET
PENSACOLA, FLORIDA 32502
(850) 434-0513

GREGORY D. PETERSON REGISTERED PROFESSIONAL ENGINEER 138011 STATE OF MISSISSIPPI

FINAL SUBMITTAL FOR CONSTRUCTION

14TH CIVIL ENGINEER SQ
BEST SERVING THE BEST

Symbol No.	Description	Date	Approved
	REVISIONS		

Designed By: CHAVERS
Drawn By: JOINER
Checked By: CHAVERS
Reviewed By: PETERSON
Date: 06 SEP 2017
File No. .
CADD File Name: .
Solicitation Number: EEPZ 10-1001

COLUMBUS AIR FORCE BASE

HEFFERNAN HOLLAND MORGAN
ARCHITECTURE
312 S.ALCANIZ ST.• PENSACOLA, FL 32502
850.433.2799 • AAC001940 • HHMA.COM

REPAIR MAINTENANCE HANGAR 456

NEW WORK FLOOR PLAN

Sheet
P-100

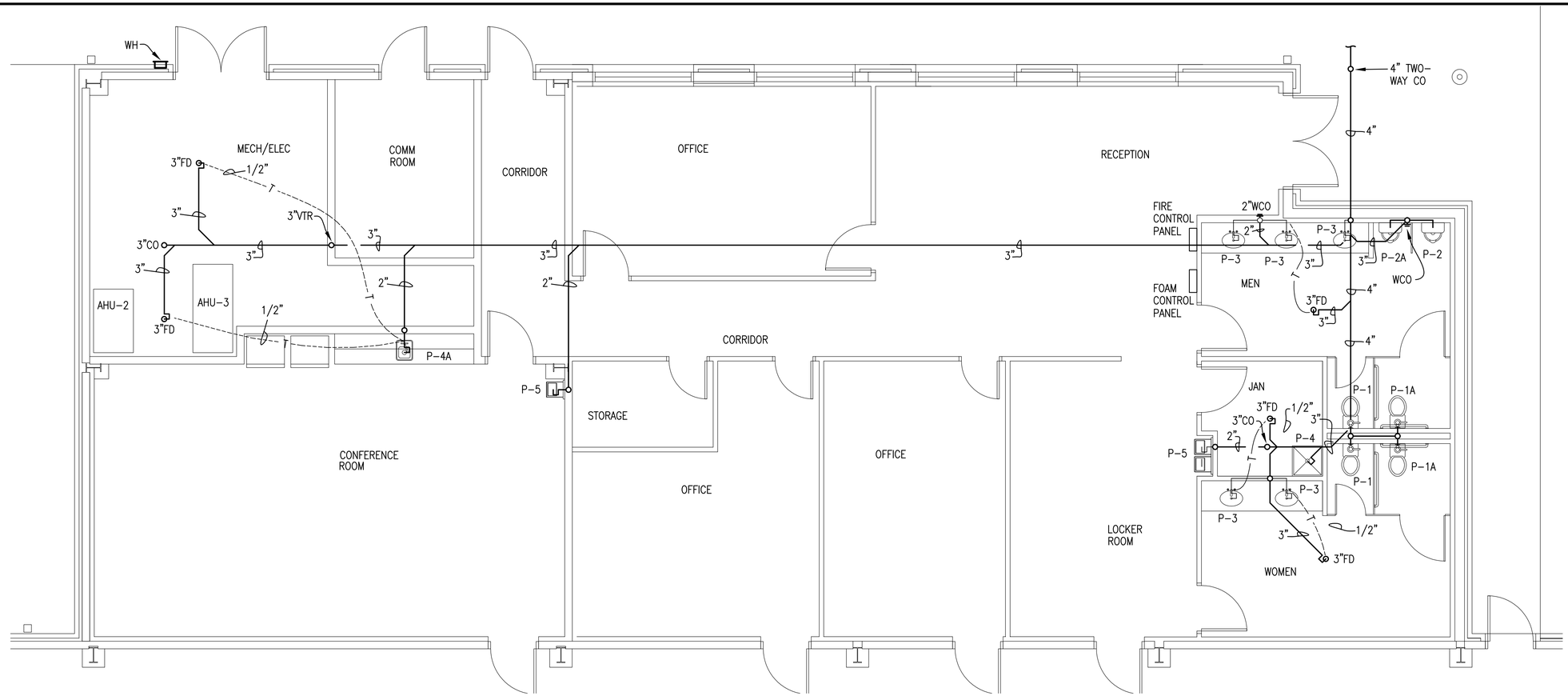

PLUMBING PLAN – WASTE
SCALE: 1/4" = 1'-0"

PLAN NORTH
TRUE NORTH

5' 0 5'
SCALE: 1/4"= 1'-0"

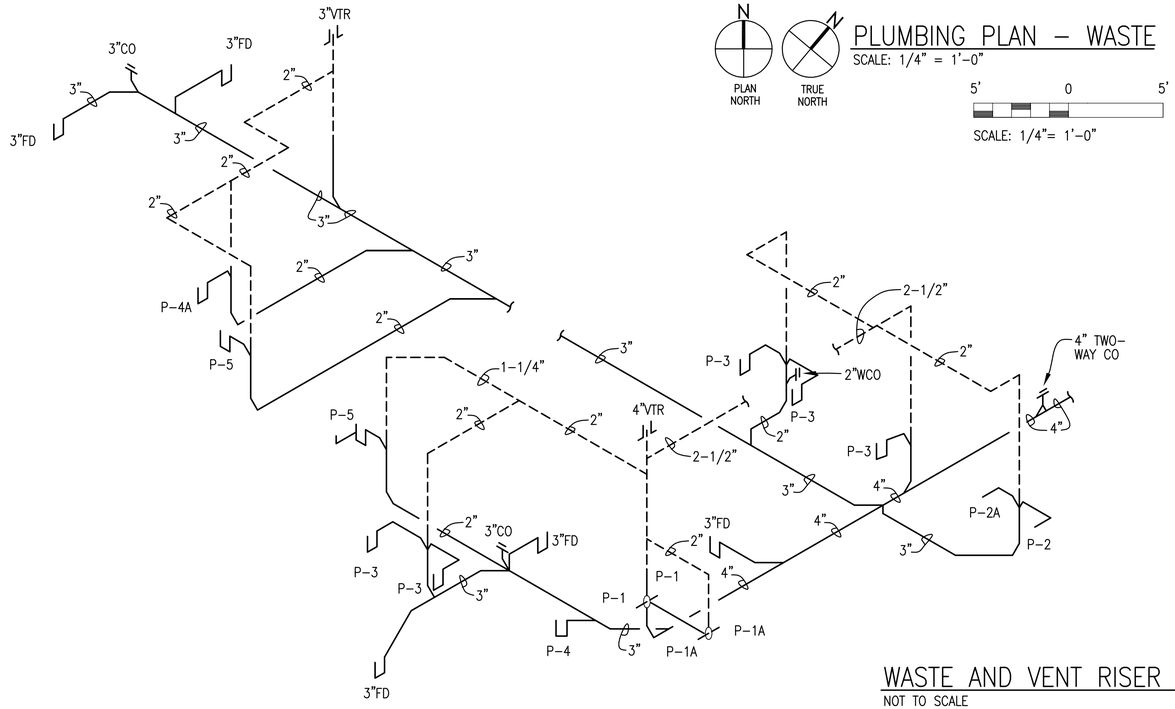

WASTE AND VENT RISER DIAGRAM
NOT TO SCALE

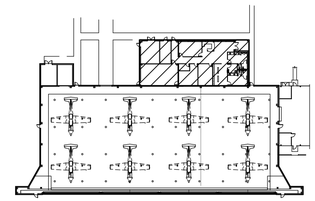

KEY PLAN
NTS

PLAN NORTH
TRUE NORTH

PETERSON ENGINEERING INC.
(PROF. ENG. #: 3600)
75 SOUTH "F" STREET
PENSACOLA, FLORIDA 32502
(850) 434-0513

GREGORY D. PETERSON
LICENSED PROFESSIONAL ENGINEER
138011
STATE OF MISSISSIPPI

FINAL SUBMITTAL
FOR CONSTRUCTION

14TH CIVIL ENGINEER SQ
BEST SERVING THE BEST

Symbol	No.	Description	Date	Approved
		REVISIONS		

Designed By: CHAVERS
Drawn By: JOINER
Checked By: CHAVERS
Reviewed By: PETERSON
Date: 06 SEP 2017
File No. .
CADD File Name: .
Solicitation Number: EEPZ 10-1001

COLUMBUS
AIR FORCE BASE
HEFFERNAN HOLLAND MORGAN
ARCHITECTURE
312 S. ALCANIZ ST. • PENSACOLA, FL 32502
850.433.2799 • AAC001942 • HHMA.COM

REPAIR MAINTENANCE
HANGAR 456

PLUMBING PLAN – WASTE

Sheet
P-101

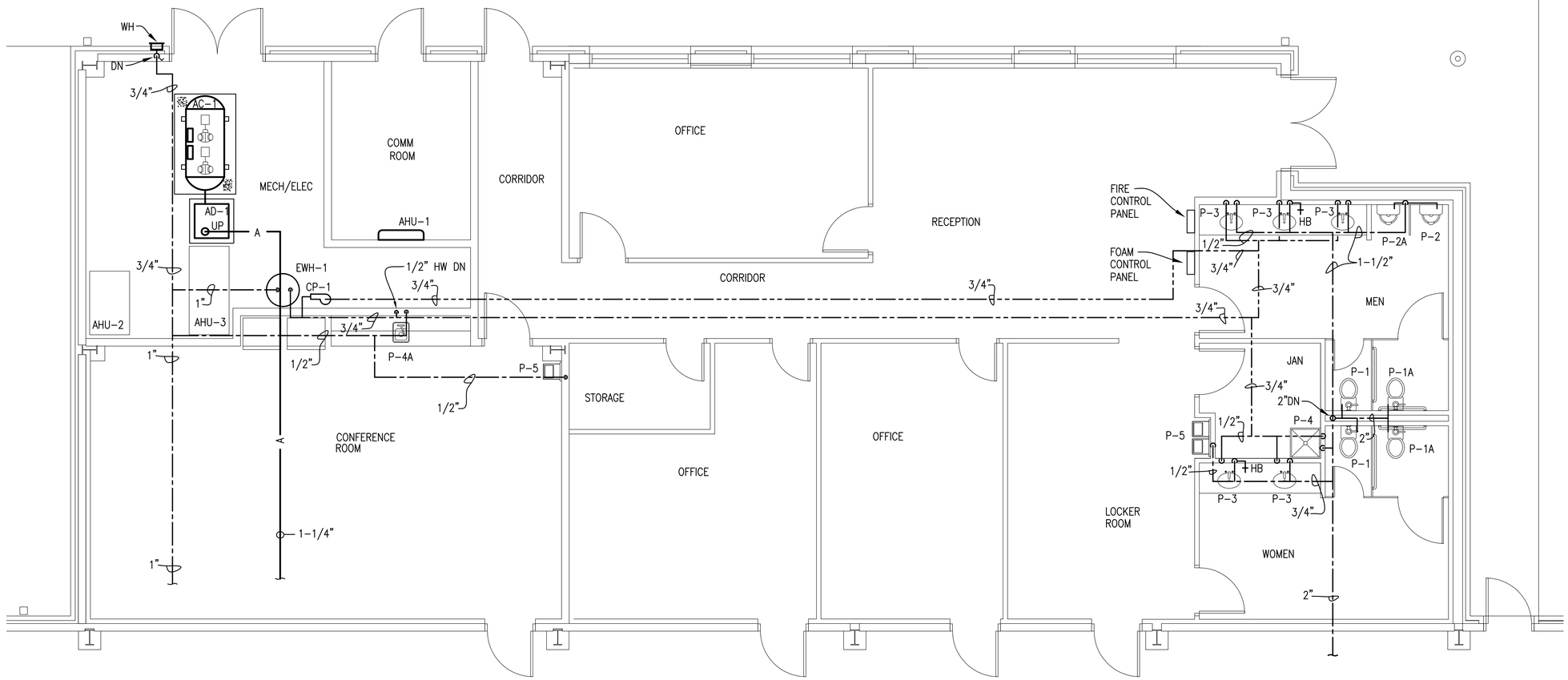

N

PLAN NORTH

TRUE NORTH

PLUMBING PLAN – WATER

SCALE: 1/4" = 1'–0"

5' 0 5'

SCALE: 1/4"= 1'–0"

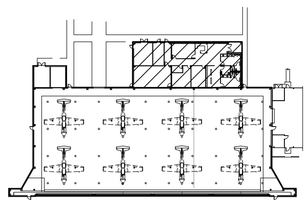

N

PLAN NORTH

TRUE NORTH

KEY PLAN

NTS

PETERSON ENGINEERING INC.
(PROF. ENG. #3660)
75 SOUTH "F" STREET
PENSACOLA, FLORIDA 32502
(850) 434–0513

PETERSON ENGINEERING INC.
(PROF. ENG. #3660)
75 SOUTH "F" STREET
PENSACOLA, FLORIDA 32502
(850) 434–0513

GREGORY D. PETERSON REGISTERED PROFESSIONAL ENGINEER 13801 STATE OF MISSISSIPPI

FINAL SUBMITTAL FOR CONSTRUCTION

14TH CIVIL ENGINEER SQ
BEST SERVING THE BEST

Symbol	No.	Description	Date	Approved
		REVISIONS		

Designed By: CHAVERS
Date: 06 SEP 2017
Drawn By: JOINER
File No. .
Checked By: CHAVERS
CADD File Name: .
Reviewed By: PETERSON
Solicitation Number: EEPZ 10–1001

COLUMBUS AIR FORCE BASE

HEFFERNAN HOLLAND MORGAN
ARCHITECTURE
312 S. ALCANIZ ST. • PENSACOLA, FL 32502
850.433.2799 • AA0001942 • HHMA.COM

REPAIR MAINTENANCE HANGAR 456

PLUMBING PLAN – WATER

Sheet

P-102

PLUMBING LEGEND

SAN	SANITARY
	SANITARY PIPING
	COLD POTABLE WATER PIPING
	POTABLE WATER PIPING
	POTABLE WATER PIPING
	POINT OF CONNECTION – NEW TO EXIST.
—G—	GAS PIPING
—A—	COMPRESSED AIR PIPING
FD	FLOOR DRAIN
DN	DOWN
WH	FREEZEPROOF WALL HYDRANT
HD	HUB DRAIN
(N)	NEW
(E)	EXISTING
HB/VB	HOSE BIBB WITH VACUUM BREAKER
CW	COLD WATER
BG	BELOW GRADE
EWH	ELECTRIC WATER HEATER
M	GAS METER
WCO	WALL CLEANOUT
IH	INFRA–RED HEATER
AHU	AIR HANDLING UNIT

—T—	TRAP PRIMER PIPING
—W—	WATER PIPING
	NEW GAS PRESSURE REDUCING VALVE
PRV,	PRESSURE REDUCING VALVE
	BALL VALVE
	PIPE UNION
	WALL CLEANOUT
	PRESSURE GUAGE WITH SHUTOFF
	PRESSURE RELIEF VALVE
PE	PLASTIC GAS PIPING
IRH	INFRA–RED HEATER
AC	AIR COMPRESSOR
AD	AIR DRYER
CP	CIRCULATING PUMP
UH	UNIT HEATER

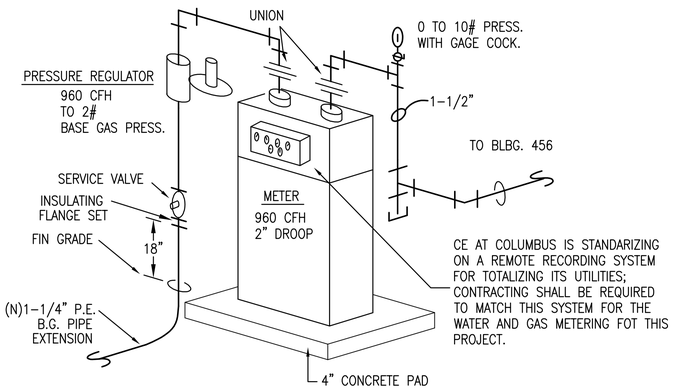

GAS METER CONNECTION DETAIL

NOT TO SCALE

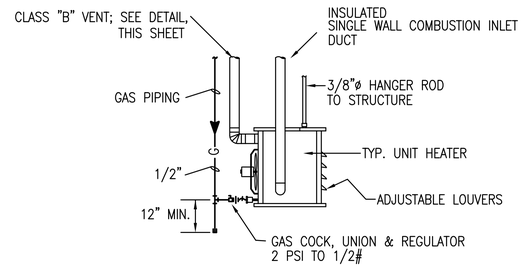

GAS FIRED UNIT HEATER DETAIL

NOT TO SCALE (SIMILAR FOR UH–1, 2 AND 3)

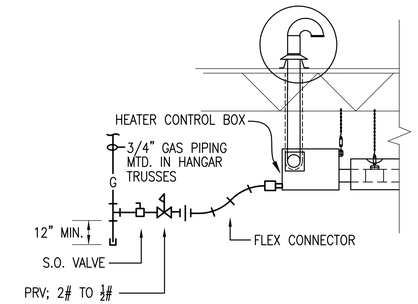

RADIANT HEATER GAS PIPING DETAIL

NOT TO SCALE

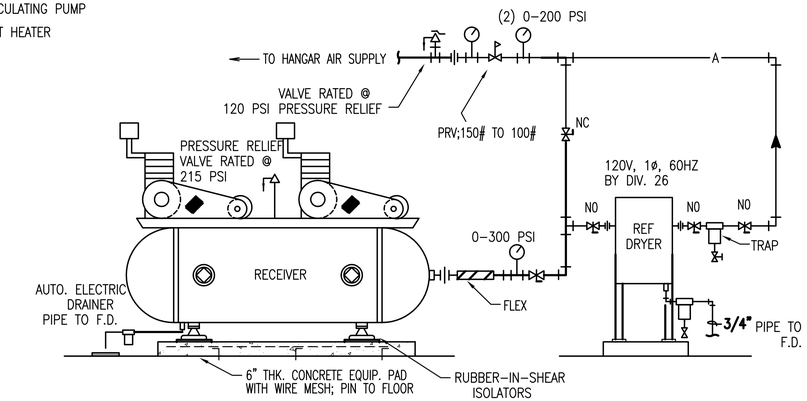

DUPLEX COMPRESSOR ASSEMBLY DETAIL

N.T.S.

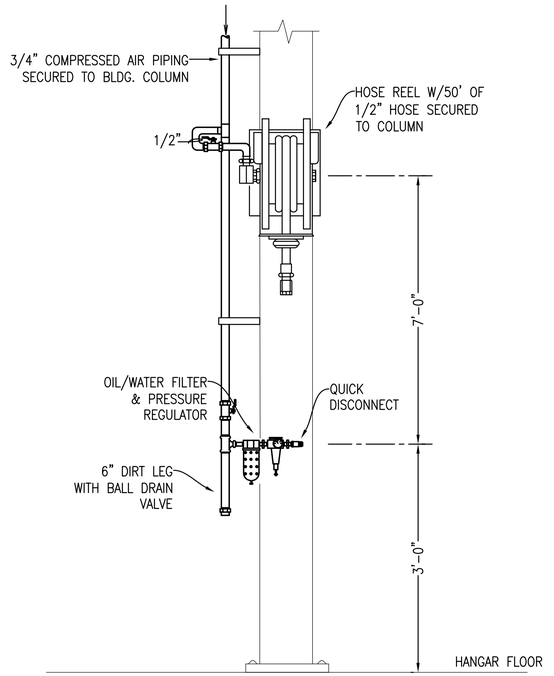

AIR DROP & HOSE REEL DETAIL

NOT TO SCALE (TYP., 6 PLACES)

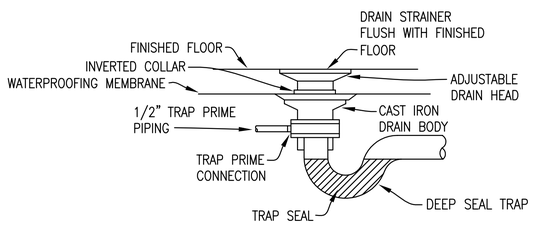

FLOOR DRAIN DETAILS

NOT TO SCALE

PETERSON ENGINEERING INC.

(PROF. ENG. #: 3600)
75 SOUTH "F" STREET
PENSACOLA, FLORIDA 32502
(850) 434–0513

GREGORY D. PETERSON LICENSED PROFESSIONAL ENGINEER 13801 STATE OF MISSISSIPPI

FINAL SUBMITTAL FOR CONSTRUCTION

14TH CIVIL ENGINEER SQ — BEST SERVING THE REST

Symbol No.	Description	Date	Approved
	REVISIONS		

Designed By: CHAVERS
Drawn By: JOINER
Checked By: CHAVERS
Reviewed By: PETERSON
Date: 06 SEP 2017
File No. .
CADD File Name: .
Solicitation Number: FEPZ 10–1001

COLUMBUS AIR FORCE BASE

HEFFERNAN HOLLAND MORGAN
ARCHITECTURE
319 S.ALCANIZ ST.● PENSACOLA, FL 32502
850.433.2799 ● AAC001940 ● HHMA.COM

REPAIR MAINTENANCE HANGAR 456

PLUMBING DETAILS

Sheet
P-501

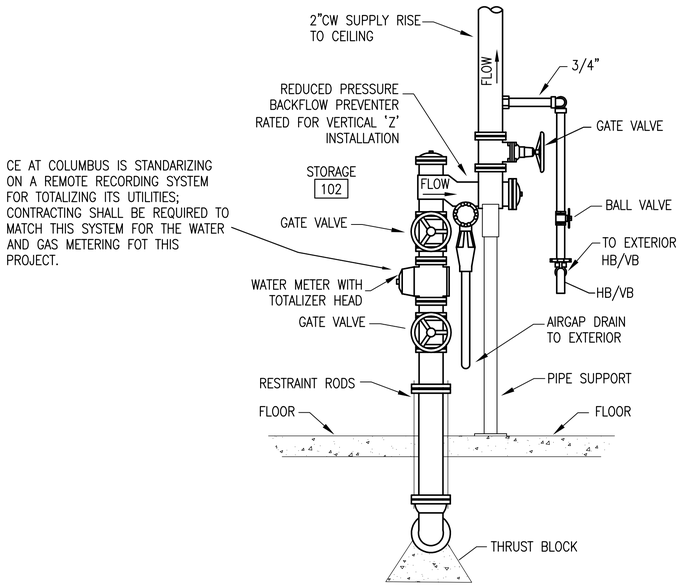

WATER SERVICE ENTRANCE DETAIL

NOT TO SCALE

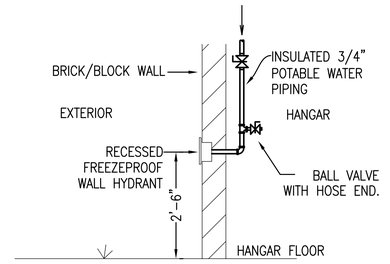

EXTERIOR WALL HYDRANT DETAIL

NOT TO SCALE

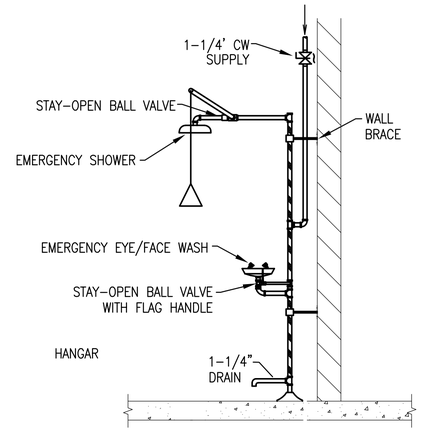

EMERGENCY EYE WASH/SHOWER DETAIL

NOT TO SCALE

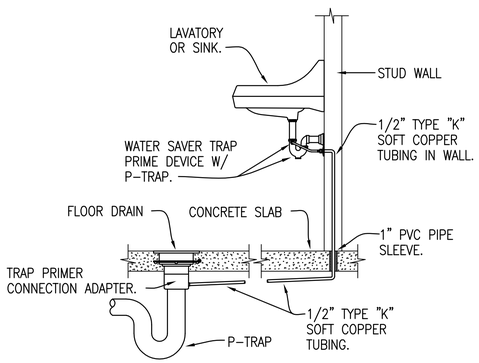

TRAP PRIMER INSTALLATION DETAIL

NOT TO SCALE

PETERSON ENGINEERING INC.
(PROF. ENG. #: 3600)
75 SOUTH "F" STREET
PENSACOLA, FLORIDA 32502
(850) 434-0513

GREGORY D. PETERSON — LICENSED PROFESSIONAL ENGINEER — 13801 — STATE OF MISSISSIPPI

FINAL SUBMITTAL
FOR CONSTRUCTION

14TH CIVIL ENGINEER SQ — BEST SERVING THE BEST

Symbol	No.	Description	Date	Approved
		REVISIONS		

Designed By: CHAVERS
Drawn By: JOINER
Checked By: CHAVERS
Reviewed By: PETERSON
Date: 06 SEP 2017
File No. .
CADD File Name: .
Solicitation Number: FEPZ 10-1001

COLUMBUS AIR FORCE BASE

HEFFERNAN HOLLAND MORGAN
ARCHITECTURE
312 S. ALCANIZ ST. • PENSACOLA, FL 32502
850.433.8799 • AAC001942 • HHMA.COM

REPAIR MAINTENANCE HANGAR 456

PLUMBING DETAILS

Sheet
P-502

AIR COMPRESSOR SCHEDULE

MARK	NO. OF COMP.	TOTAL FOR UNIT	FREE AIR DISC. PRESS	ELECTRICAL VOLTS	Hz	Ph	AMP (EA COMP)	SHUT OFF PRESSURE	(2)HP @	TYPE	RECEIVER
AC–1	2 @ 10hp EA	69.6	175 PSIG	460	60	3	12.8	125 psig	10	HORIZ VERTICAL TWO STAGE DUPLEX	(1)(2)(3) 120 GAL. ASME RATED TANK

NOTE: (1) PROVIDE COMPRESSOR WITH START–UP KIT (2) PROVIDE W/MOTOR STARTERS W/ALTERNATOR (3) INCLUDES AUTO DRAINER & ISOLATION PADS

REFRIGERATED AIR DRYER SCHEDULE(FLOOR MTD. TYPE)

MARK	SCFM @ 38°F DEWPOINT	MAX WORKING PRESS PSI	COMP. HP	ELECTRICAL VOLTS	Hz	Ph	REMARKS
AD–1	69.6	175	3/4	115	60	1	MIN. 1" INLET/OUTLET CONNECTION; TO INCLUDE AUTO DRAINER, ISOLATION PADS & FLEX HOSE

FIXTURE CONNECTION SCHEDULE

MARK	DESCRIPTION	WASTE	CW	HW	REMARKS
P–1	WATER CLOSET	4"	1"	––	WALL HUNG VITREOUS CHINA FLUSH VALVE TYPE AT 1.28 GPF
P–1A	WATER CLOSET (ADA)	4"	1"	––	WALL HUNG VITREOUS CHINA FLUSH VALVE TYPE AT 1.28 GPF
P–2	URINAL	2"	3/4"	––	WALL HUNG VITREOUS CHINA FLUSH VALVE TYPE AT 0.125 GPF
P–2A	URINAL (ADA)	2"	3/4"	––	WALL HUNG VITREOUS CHINA FLUSH VALVE TYPE AT 0.125 GPF
P–3	LAVATORY (ADA)	1–1/4"	1/2"	1/2"	COUNTER MOUNTED VITREOUS CHINA SINGLE LEVER FAUCET AT 0.5 GPF
P–4	MOP SINK	3"	1/2"	1/2"	24x24x12 DEEP MOLDED STONE WITH WALL MIXING FAUCET, VACUUM BREAKER, HOSE KIT AND MOP HANGER
P–4A	PARTY SINK	2"	1/2"	1/2"	COUNTER MOUNTED 13"x18" STAINLESS STEEL
P–5	ELECTRIC WATER COOLER (ADA)	1–1/4"	1/2"	––	WALL HUNG SPLIT LEVEL BUBBLER TYPE ALL STAINLESS STEEL
P–6	EMERGENCY EYE WASH/SHOWER	––	1–1/2"	––	STAINLESS STEEL WITH FOOT CONTROL, EXPLOSION PROOF LIGHT AND HORN
HB	HOSE BIBB	––	3/4"	––	SERVICE MOUNTED CHROME PLATED BRASS WITH VACUUM BREAKER
WH	WALL HYDRANT	––	3/4"	––	RECESSED FREEZE PROOF BRONZE BOX WITH VACUUM BREAKER
FD	FLOOR DRAIN	3"	1/2"	––	WITH TRAP AND TRAP PRIME

(ADA) DENOTES FIXTURES TO BE MANUFACTURED AND MOUNTED FOR AMERICANS WITH DISABILITIES ACT USE. INSULATE SUPPLIES AND P–TRAP.

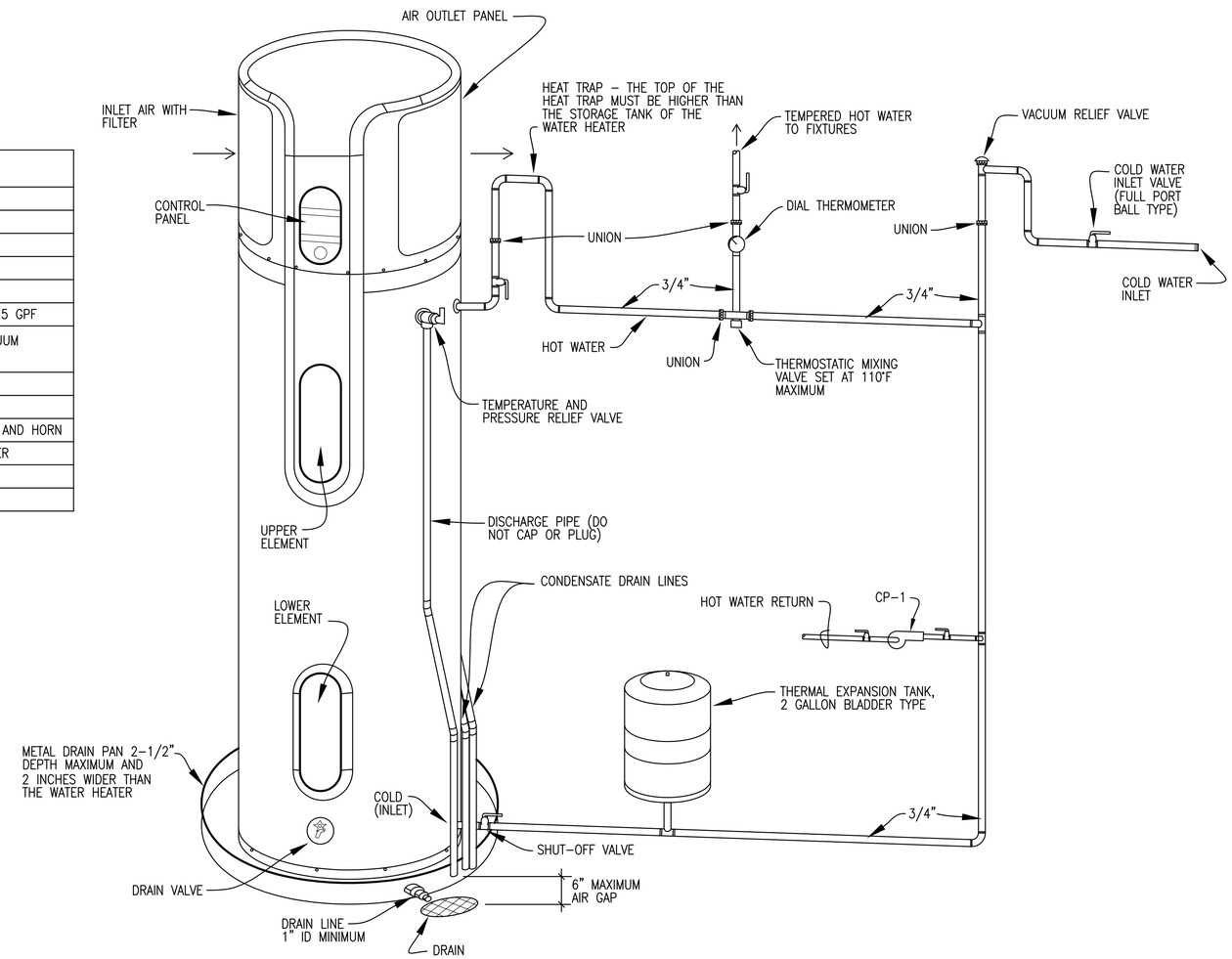

HEAT PUMP WATER HEATER SCHEDULE

MARK	GALLON CAPACITY	ENERGY FACTORY BY MODE			1ST HOUR RATING BY MODE			BACKUP ELECTRIC ELEMENTS *		ELECTRICAL			REFRIGERANT	REMARKS
		EFFICIENCY	HYBRID	ELECTRIC	EFFICIENCY	HYBRID	ELECTRIC	LOWER	UPPER	VOLTS	PHASE	Hz		
HPWH–1	66	3.44	3.17	0.92	62.5	80	78.6	2 KW	4.5 KW	208/240	1	60	R134a	BASIS OF DESIGN: A. O. SMITH MODEL HPTU–66

* WIRE FOR NON–SIMULTANEOUS OPERATION

PETERSON ENGINEERING INC.
(PROF. ENG. #: 3600)
75 SOUTH "F" STREET
PENSACOLA, FLORIDA 32502
(850) 434–0513

GREGORY D. PETERSON — LICENSED PROFESSIONAL ENGINEER — 38014 — STATE OF MISSISSIPPI

FINAL SUBMITTAL FOR CONSTRUCTION

14TH CIVIL ENGINEER SQ — BEST SERVING THE BEST

Symbol No.	Description	Date	Approved
	REVISIONS		

Designed By: CHAVERS
Drawn By: JOINER
Checked By: CHAVERS
Reviewed By: PETERSON
Date: 06 SEP 2017
File No. .
CADD File Name: .
Solicitation Number: EEPZ 10–1001

COLUMBUS AIR FORCE BASE

ARCHITECTURE — HEFFERNAN HOLLAND MORGAN
312 S.ALCANIZ ST.• PENSACOLA, FL 32502
850.433.8799 • AAC001942 • HHMA.COM

REPAIR MAINTENANCE HANGAR 456

PLUMBING SCHEDULES

Sheet
P-601

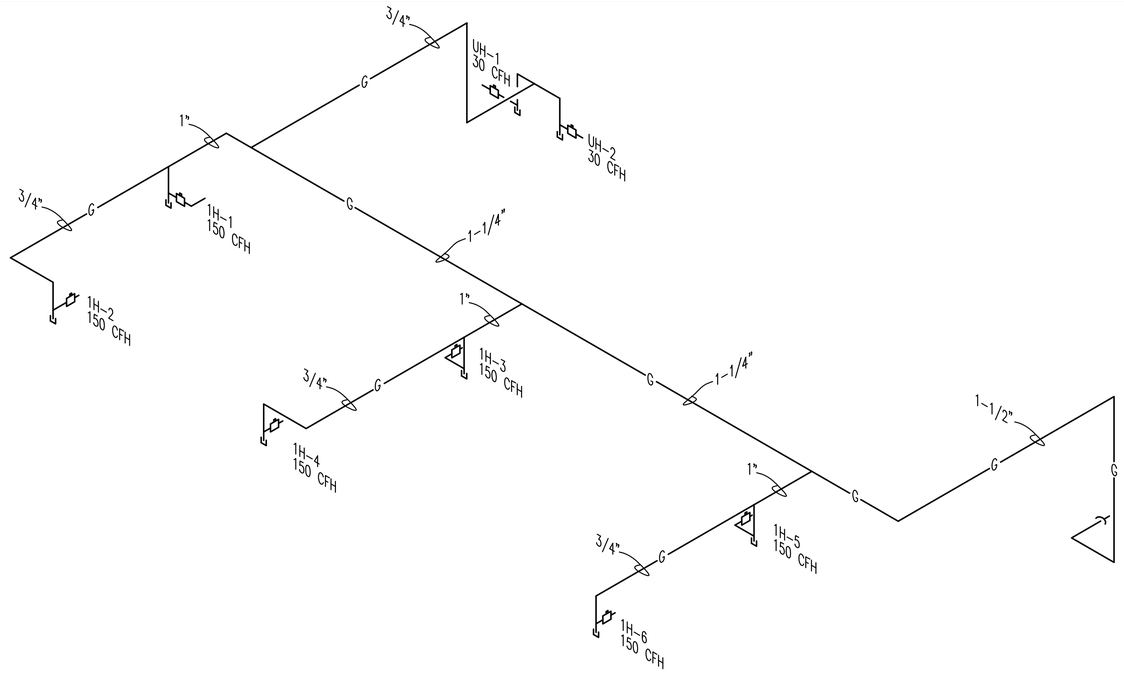

GAS RISER DIAGRAM
NOT TO SCALE

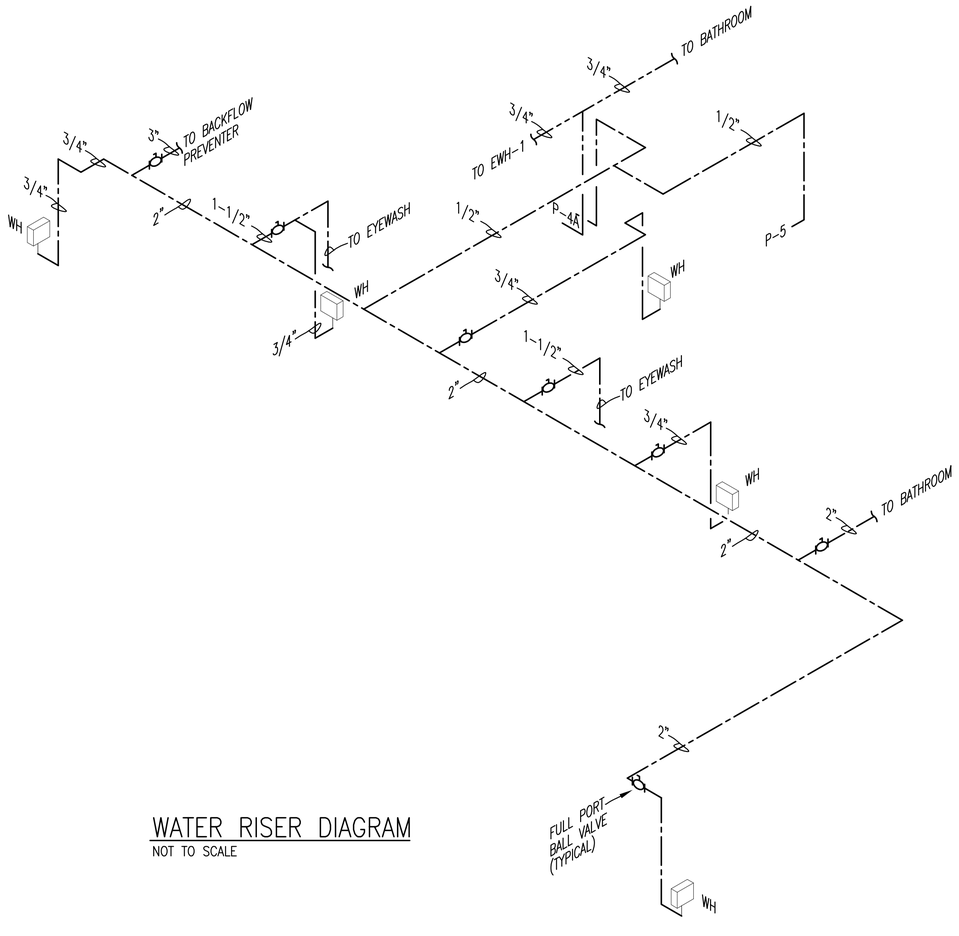

WATER RISER DIAGRAM
NOT TO SCALE

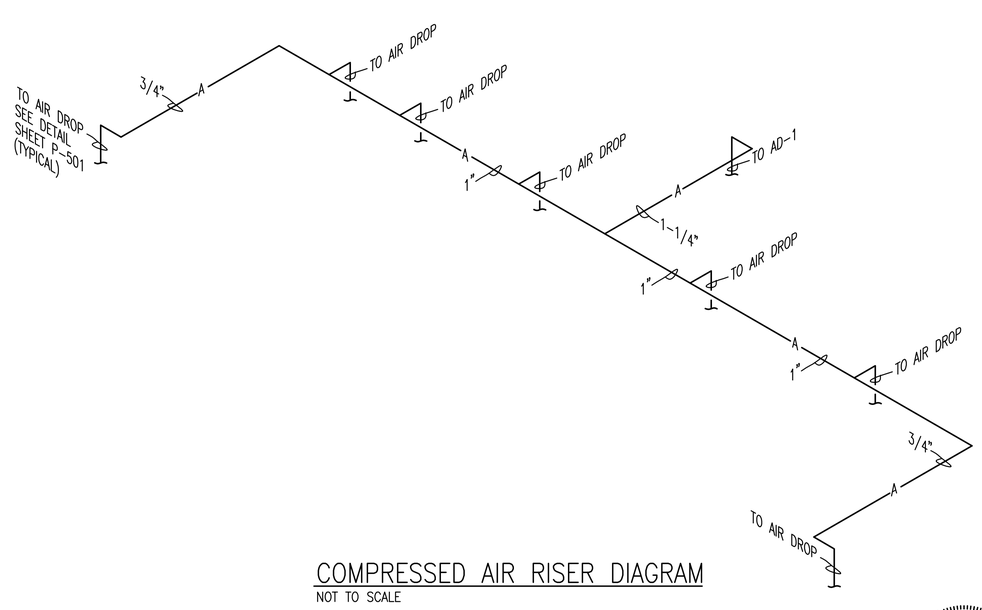

COMPRESSED AIR RISER DIAGRAM
NOT TO SCALE

PETERSON ENGINEERING INC.
(PROF. ENG. #: 3600)
75 SOUTH "F" STREET
PENSACOLA, FLORIDA 32502
(850) 434-0513

GREGORY D. PETERSON
LICENSED PROFESSIONAL ENGINEER
ENGINEER
13801
STATE OF MISSISSIPPI

FINAL SUBMITTAL
FOR CONSTRUCTION

14TH CIVIL ENGINEER SQ
BEST SERVING THE BEST

Symbol	No.	Description	Date	Approved
		REVISIONS		

Designed By: CHAVERS
Drawn By: JOINER
Checked By: CHAVERS
Reviewed By: PETERSON
Date: 06 SEP 2017
File No. .
CADD File Name: .
Solicitation Number: EEPZ 10-1001

COLUMBUS
AIR FORCE BASE

HEFFERNAN HOLLAND MORGAN
ARCHITECTURE
319 S. ALCANIZ ST. • PENSACOLA, FL 32502
850.433.2799 • AAC0001942 • HHMA.COM

REPAIR MAINTENANCE
HANGAR 456

PLUMBING RISER DIAGRAMS

Sheet
P-602

LEGEND

WxH — RECTANGULAR GALVANIZED STEEL DUCTWORK, SIZES SHOWN ARE INTERNAL CLEAR DIMENSIONS (WIDTH x HEIGHT) FIRST FIGURE IS SIDE SHOWN.

8"ø — ROUND SNAPLOCK GALVANIZED STEEL DUCTWORK, EXTERNALLY INSULATED, SMACNA STATIC PRESSURE CONSTRUCTION CLASS 1/2" w.g., SEAL CLASS C. SIZE SHOWN IS SHEET METAL DIAMETER. SHALL BE USED ONLY AT RUNOUTS TO AIR OUTLETS.

FACTORY FABRICATED/INSULATED FLEXIBLE ROUND DUCT, SIZE SHOWN IS INSIDE DIAMETER.

16"ø — ROUND SPIRAL SEAM GALVANIZED STEEL DUCTWORK, EXTERNALLY INSULATED. SIZE SHOWN IS SHEET METAL DIAMETER. SMACNA STATIC PRESSURE CLASS 4" W.G., SEAL CLASS A.

SQUARE THROAT ELBOW IN RECTANGULAR DUCT WITH DOUBLE WALL TURNING VANES.

LONG RADIUS ELBOW IN RECTANGULAR DUCT.

TRANSITION

RECTANGULAR TO ROUND DUCT TRANSITION.

RECTANGULAR BRANCH DUCT TAKE OFF FROM RECTANGULAR DUCT MAIN WITH 45° COLLAR.

RECTANGULAR DUCTWORK TURNING 90° UP.

RECTANGULAR DUCTWORK TURNING 90° DOWN.

CEILING DIFFUSER WITH 24"x24" FACE. PROVIDE SURFACE MOUNT STYLE FOR GYPSUM BOARD CEILINGS AND LAY-IN TYPE AT T-BAR CEILING GRID. ROUND NECK SIZE AND AIRFLOW AS INDICATED. 4-WAY DIRECTION OF THROW. PROVIDE WITH OPPOSED BLADE VOLUME CONTROL DAMPER. BACK FACE OF DIFFUSER SHALL HAVE INSULATION BLANKET.

ROUND BRANCH DUCT TAKEOFF FROM RECTANGULAR DUCT MAIN. BRANCH DUCT SHALL BE FLEXIBLE ROUND DUCT OR ROUND SNAPLOCK DUCT AS INDICATED. ROUND DUCT TAP IN SHALL BE MADE WITH SCOOP AND STANDOFF WITH MANUAL VOLUME DAMPER. MANUAL VOLUME DAMPER SHALL HAVE LOCKING QUADRANTS.

TS — TEMPERATURE SENSOR

SPT — STATIC PRESSURE TRANSMITTER

FD / DUCT — FIRE DAMPER WITH ACCESS PANEL. IF THE PANEL CANNOT BE 20"x20" IT SHALL BE 2" NARROWER THAN THE DUCT SIZE.

SD — SMOKE DETECTOR

UNION

GAGE FITTING W/BALL VALVE

BALL VALVE FOR SHUTOFF SERVICE

STRAINER WITH BALL VALVE AND BLOWDOWN

PRV — PRESSURE REDUCING VALVE

AUTOMATIC AIR VENT WITH BALL VALVE. ROUTE 1/4" SOFT COPPER TUBING FROM DISCHARGE TO FLOOR DRAIN UNLESS OTHERWISE INDICATED.

AUTOMATIC 3-WAY ELECTRIC CONTROL VALVE

AUTOMATIC 2-WAY ELECTRIC CONTROL VALVE

FLEXIBLE PIPE CONNECTOR

PRESSURE GAGE WITH BALL VALVE

P/T — COMBINATION PRESSURE AND TEMPERATURE TEST PLUG WITH EXTENDED NECK AND CAP

ELBOW TURN UP

ELBOW TURN DOWN

CONNECTION, TOP

CONNECTION, BOTTOM

FRAME MOUNTED PUMP

(AI) ANALOG INPUT INTO CONTROL PANEL

(AO) ANALOG OUTPUT INTO CONTROL PANEL

(DI) DIGITIAL INPUT INTO CONTROL PANEL

(DO) DIGITIAL OUTPUT INTO CONTROL PANEL

MS — MOTOR STARTER

VFD — VARIABLE FREQUENCY DRIVE

DDC — DIRECT DIGITAL CONTROL PANEL

AIR TERMINAL UNIT

(T) # — SPACE THERMOSTAT SERVING UNIT #, MOUNT 48" A.F.F.

E — EMERGENCY SHUT-DOWN SWITCH, MOUNT 48" A.F.F.

MANUAL VOLUME DAMPER, PROVIDE WITH LOCKING QUADRANT

ABBREVIATIONS

AD – AUTOMATIC DAMPER
ACT – ACOUSTICAL CEILING TILE
AHU – AIR HANDLING UNIT
AMB – AMBIENT
CD – CEILING DIFFUSER
CFM – CUBIC FEET PER MINUTE
DB – DRY BULB
DDC – DIRECT DIGITAL CONTROL
EAL – EXHAUST AIR LOUVER
EF – EXHAUST FAN
EAG – EXHAUST AIR GRILLE
EAL – EXHAUST AIR LOUVER
EX – EXISTING
FD – FIRE DAMPER
GPM – GALLONS PER MINUTE
HP – HORSEPOWER
HPCU – HEAT PUMP CONDENSING UNIT
HP – HORSEPOWER
IPLV – INTEGRATED PART LOAD VALUE
MAX – MAXIMUM
MBTU – THOUSAND BRITISH THERMAL UNIT
MIN – MINIMUM
MVD – MANUAL VOLUME DAMPER
OA – OUTSIDE AIR
OAL – OUTSIDE AIR LOUVER
RA – RETURN AIR
RPM – REVOLUTIONS PER MINUTE
SA – SUPPLY AIR
SAR – SUPPLY AIR REGISTER
SPT – STATIC PRESSURE TRANSMITTER
SWR – SIDE WALL REGISTER
T'STAT – THERMOSTAT
TAG – TRANSFER GRILLE
TYP – TYPICAL
VAV – VARIABLE AIR VOLUME
VFD – VARIABLE FREQUENCY DRIVE
WB – WET BULB

GENERAL MECHANICAL NOTES

1. THERMOSTATS INDICATED ADJACENT TO DOORWAYS SHALL BE LOCATED WITHIN 18" OF JAMB. AT LOCATIONS WITH LIGHT SWITCHES, LOCATE T'STAT SUCH THAT LIGHT SWITCH IS BETWEEN T'STAT AND JAMB. T'STATS SHALL BE LOCATED 48" AFF. VERIFY T'STAT LOCATIONS WITH EXISTING FURNITURE LAYOUT PRIOR TO INSTALLING ANY T'STAT.
2. ACCESS PANELS SHALL BE PROVIDED FOR MAINTENANCE OF EQUIPMENT LOCATED ABOVE HARD CEILINGS OR OTHERWISE CONCEALED.
3. MECHANICAL CONTRACTOR SHALL KEEP FIRE MARSHALL'S APPROVED CONSTRUCTION DOCUMENTS ON JOB SITE AT ALL TIMES.
4. ALL EXTERIOR SUPPORT MEMBERS SHALL BE HOT DIPPED GALVANIZED AND ALL FASTENERS SHALL BE STAINLESS STEEL.
5. ALL EXTERIOR PIPING SHALL HAVE ALUMINUM JACKETS WITH SEAMS LOCATED ON BOTTOM.
6. PRESSURE GAUGES AND DRY WELL TYPE TEMPERATURE THERMOMETERS SHALL BE INSTALLED ON ALL SUPPLY AND RETURN DISTRIBUTION LINES AT ALL CHILLERS, PUMPS, AND AIR HANDLERS. EACH GAUGE SHALL HAVE AN ISOLATION VALVE.
7. MECHANICAL HVAC AUTOMATIC AIR BLEEDERS WITH VALVES SHALL BE INSTALLED ON ALL HVAC WATER PIPING DISTRIBUTION LINES. INSTALL THESE BLEEDERS AND VALVES AT THE HIGHEST POINT IN THE DISTRIBUTION SYSTEM. MECHANICAL & PLUMBING ACCESS PANELS SHALL BE OF SUFFICIENT SIZE AND LOCATED SO THAT CONCEALED COMPONENTS MAY BE EASILY SERVICED, MAINTAINED, AND COMPLETELY REMOVED AND/OR REPLACED.
8. ALL VALVES, VAVS, DAMPERS, AND/OR OTHER MECHANICAL DEVICES THAT MAINTENANCE PERSONNEL MAY NEED ACCESS TO SHALL BE MARKED ON THE CEILING GRID WITH A PROFESSIONAL LOOKING, AESTHETICALLY APPROVED, MARKING SYSTEM. A LAMINATED INDEX OF THE MARKINGS SHALL BE PLACED IN THE MECHANICAL ROOM.
9. ALL OUTDOOR AIR INTAKES AND EXHAUST OPENINGS SHALL BE AT LEAST 10'-0" ABOVE THE GROUND IN ACCORDANCE WITH ATFP REQUIREMENTS.

TYPICAL DUCTWORK & INSULATION NOTES

1. ALL ROUND FLEXIBLE DUCT SHALL BE FACTORY PRE-INSULATED WITH 2" THICK FIBERGLASS INSULATION. MAXIMUM LENGTH OF ANY FLEXIBLE DUCT RUN OUT SHALL BE 6'-0". WHERE LENGTH REQUIRED EXCEEDS 6'-0", INSTALL EXTERNALLY INSULATED ROUND SNAPLOCK DUCT FOR BALANCE OF DISTANCE TO SPIN-IN TAP AT MAIN DUCT TRUNK. NOTE: ALL DUCT PENETRATING WALLS WILL BE INSULATED COMPLETELY THROUGH THE PENETRATIONS.
2. SEAL ALL DUCT PENETRATIONS OF WALLS AIRTIGHT, REGARDLESS OF WHETHER WALLS ARE FIRE RATED OR NOT.
3. ALL SUPPLY AIR DUCTWORK UPSTREAM OF AIR TERMINAL UNITS SHALL BE MEDIUM PRESSURE RECTANGULAR, ROUND, OR FLAT OVAL SPIRAL SEAM AS INDICATED. SMACNA STATIC PRESSURE CLASS 4" W.G., SEAL CLASS A, EXTERNALLY INSULATED R-8 RIGID OR FSK FOIL FACED WRAP.
4. ALL UNEXPOSED SUPPLY AIR DUCTWORK DOWNSTREAM OF AIR TERMINAL UNITS (EXCEPT TAKEOFFS TO SUPPLY AIR DIFFUSERS) SHALL BE LOW PRESSURE RECTANGULAR, SMACNA STATIC PRESSURE CLASS 1" W.G., SEAL CLASS C, EXTERNALLY INSULATED WITH MIN R-8 FIBERGLASS DUCT WRAP. ALL EXPOSED DUCTWORK IN OCCUPIED SPACES SHALL BE DOUBLE WALL, ROUND OR FLAT OVAL, SPIRAL SEAM AS INDICATED SMACNA STATIC PRESSURE CLASS 1"WC, SEAL CLASS C, INSULATION IN ACCORDANCE WITH ASHRAE 90.1. ALL EXPOSED DUCTWORK IN MECHANICAL ROOM SHALL BE JACKETED AND PREPARED FOR FINISH PAINTING.
5. ALL RETURN AIR DUCTWORK SHALL BE LOW PRESSURE RECTANGULAR, SMACNA STATIC PRESSURE CLASS 1" W.G., SEAL CLASS B. DUCT SIZES INDICATED ARE INSIDE CLEAR DIMENSIONS, INSULATED IN UNCONIDITIONED SPACES.
6. ALL OUTSIDE AIR INTAKE DUCTWORK SHALL BE LOW PRESSURE RECTANGULAR, SMACNA STATIC PRESSURE CLASS 1" W.G., SEAL CLASS B EXTERNALLY INSULATED MIN. R-8 RIGID OR FSK FOIL FACED WRAP.
7. EXHAUST AIR DUCTWORK SHALL BE LOW PRESSURE RECTANGULAR, SMACNA STATIC PRESSURE CLASS 1/2" W.G., SEAL CLASS B.
8. AVOID ROUTING DUCTWORK AND ATU'S OVER LIGHTS WHEREVER POSSIBLE. MAINTAIN MINIMUM 6" CLEARANCE BETWEEN ATU'S AND DUCT INSULATION TO TOP OF LIGHTS. PROVIDE CLEARANCE AND ACCESS ALL AROUND AND BELOW AIR TERMINAL UNITS AS REQUIRED FOR ROUTINE MAINTENANCE. AIR TERMINAL UNITS, (ATU) SHOULD NOT BE INSTALLED MORE THAN 20" ABOVE CEILING TO ALLOW ACCESS FOR MAINTENANCE. ACCESS PANELS SHALL BE PROVIDED FOR MAINTENANCE TO VAV BOX ATU HOT WATER REHEAT COILS
9. ALL DUCTWORK SHALL BE GALVANIZED STEEL WITH A G90 COATING UNLESS NOTED OTHERWISE. DUCTBOARD OR OTHER SUBSTITUTES SHALL NOT BE ACCEPTABLE.
10. DUCTWORK SHALL BE LEAK TESTED IN ACCORDANCE WITH SMACNA GUIDELINES. DUCT LEAKAGE SHALL MEET THE REQUIREMENTS OF IECC 2009.

PETERSON ENGINEERING INC.
(PROF. ENG. #: 3600)
75 SOUTH "F" STREET
PENSACOLA, FLORIDA 32502
(850) 434-0513

GREGORY D. PETERSON — LICENSED PROFESSIONAL ENGINEER — 13801 — STATE OF MISSISSIPPI

FINAL SUBMITTAL
FOR CONSTRUCTION

14TH CIVIL ENGINEER SQ — BEST SERVING THE BEST

REVISIONS

Symbol	No.	Description	Date	Approved

Designed By: JOHNSON
Drawn By: VCHULEK
Checked By: JOHNSON
Reviewed By: PETERSON
Date: 06 SEP 2017
File No. .
CADD File Name: .
Solicitation Number: EEPZ 10-1001

COLUMBUS AIR FORCE BASE

HEFFERNAN HOLLAND MORGAN
ARCHITECTURE
319 S.ALCANIZ ST.● PENSACOLA, FL 32502
850.433.2799 ● AAC001942 ● HHMA.COM

REPAIR MAINTENANCE
HANGAR 456

MECHANICAL LEGEND, ABBREVIATIONS, AND NOTES

Sheet
M-001

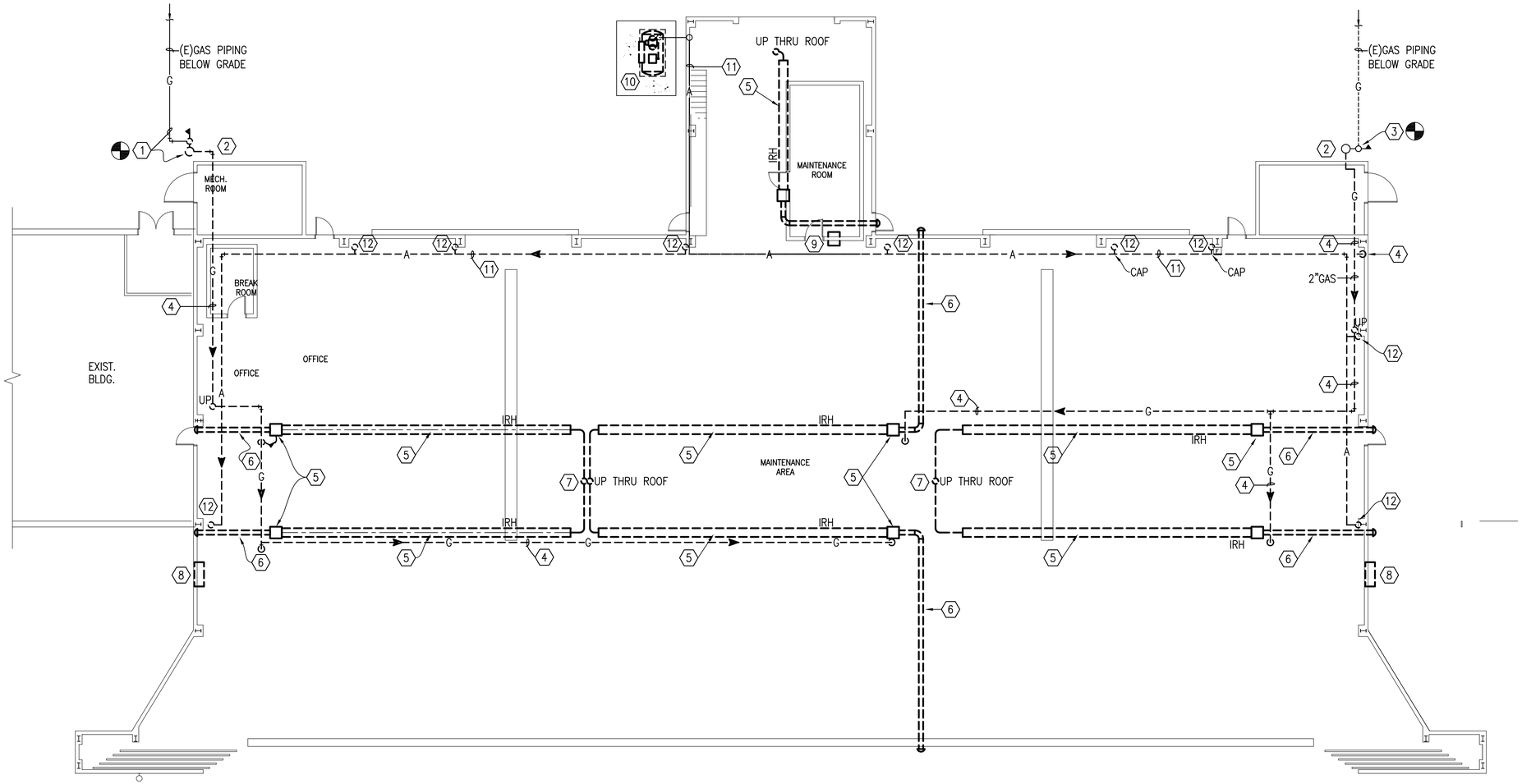

N

LOWER LEVEL DEMOLITION PLAN
SCALE: 3/32" = 1'-0"

GENERAL DEMOLITION NOTE:

UNDER THIS CONTRACT, HANGAR 456 SHALL BE COMPLETELY DEMOLISHED WITH EXCEPTION OF THE STRUCTURAL STEEL FRAMING. ALL MECHANICAL, PLUMBING, AND FIRE PROTECTION SYSTEMS INSIDE AND IMMEDIATELY OUTSIDE THIS HANGAR SHALL BE DEMOLISHED WHETHER OR NOT IT IS SPECIFICALLY IDENTIFIED ON THESE PLANS. THIS DEMOLITION SHALL INCLUDE ANY EQUIPMENT THAT HAS PREVIOUSLY BEEN ABANDONED IN PLACE. ALL UTILITIES SHALL BE CAPPED OUTSIDE THE BUILDING; COORDINATE OUTSIDE WORK WITH CIVIL PLANS.

LOWER LEVEL DEMOLITION PLAN NOTES:

1. SECURE GAS PIPING; REMOVE METER AND PIPING TO UNDERGROUND.
2. REMOVE ABOVE GRADE GAS PIPING.
3. SECURE GAS AT RISER AND REMOVE DOWNSTREAM PIPING.
4. REMOVE OVERHEAD GAS PIPING.
5. REMOVE INFRA-RED HEATERS, COMPLETE.
6. REMOVE COMBUSTION AIR DUCT THRU WALL.
7. REMOVE FLUE DUCT THRU ROOF.
8. REMOVE WALL LOUVER.
9. REMOVE THRU-THE-WALL A/C UNIT.
10. REMOVE AIR COMPRESSOR COMPLETE.
11. REMOVE ALL COMPRESSED AIR PIPING.
12. REMOVE COMPRESSED AIR PIPING DROPS, HOSE REELS, ETC.

3/32"= 1'-0"

10' 0 10' 20'

PETERSON ENGINEERING INC.
(PROF. ENG. #: 3600)
75 SOUTH "F" STREET
PENSACOLA, FLORIDA 32502
(850) 434-0513

GREGORY D. PETERSON REGISTERED PROFESSIONAL ENGINEER 13801 STATE OF MISSISSIPPI

FINAL SUBMITTAL
FOR CONSTRUCTION

14TH CIVIL ENGINEER SQ
BEST SERVING THE REST

Symbol	No.	Description	Date	Approved
		REVISIONS		

Designed By: JOHNSON
Drawn By: VCHULEK
Checked By: JOHNSON
Reviewed By: PETERSON
Date: 06 SEP 2017
File No. .
CADD File Name: .
Solicitation Number: EEPZ 10-1001

COLUMBUS AIR FORCE BASE

HEFFERNAN HOLLAND MORGAN
ARCHITECTURE
312 S. ALCANIZ ST • PENSACOLA, FL 32502
850.433.2799 • AAC001942 • HHMA.COM

REPAIR MAINTENANCE HANGAR 456

DEMOLITION FLOOR PLAN

Sheet
M-101

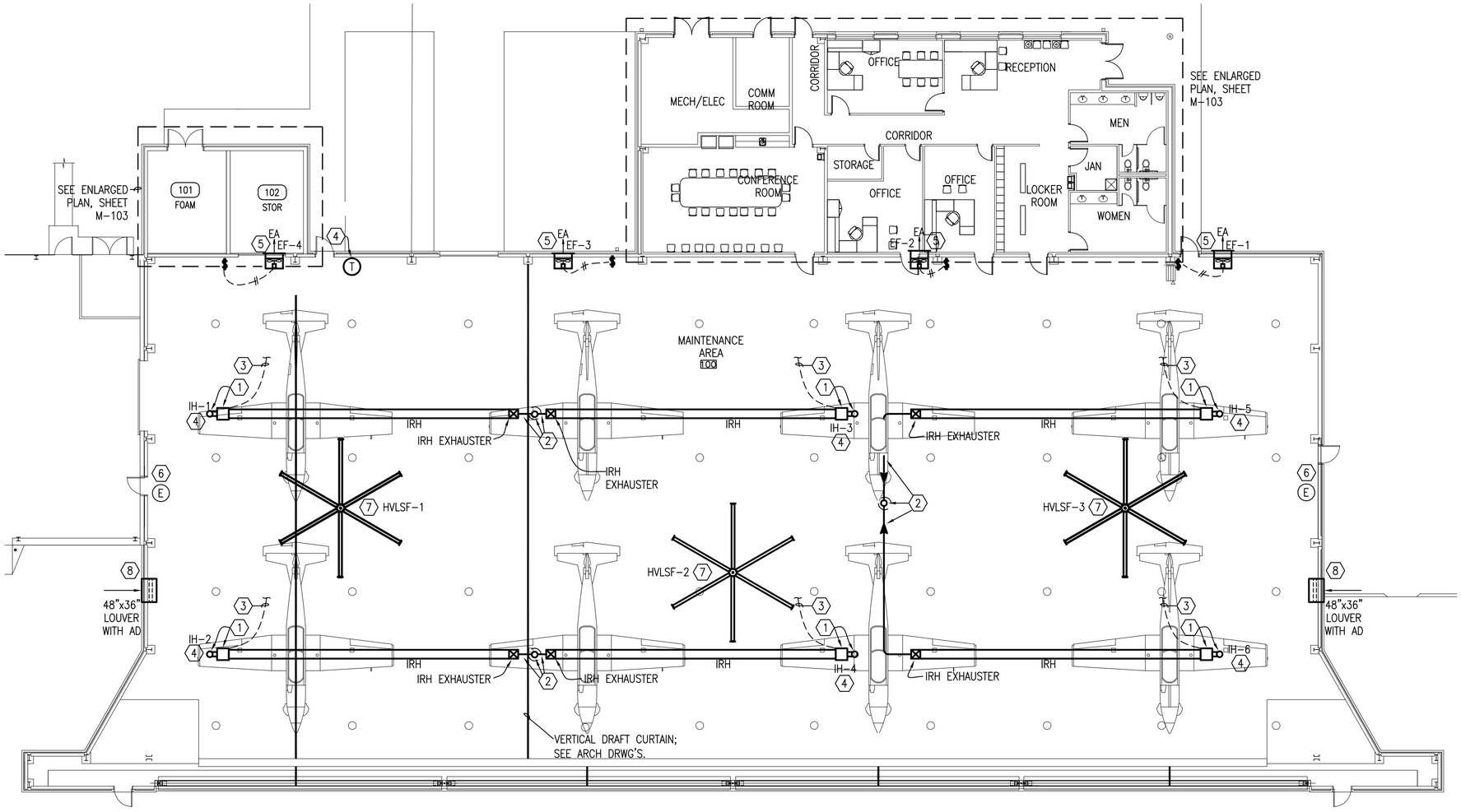

FLOOR PLAN NOTES:

1. INFRA-RED CONTROLLER BOX WITH ½" GAS CONNECTION & 6" SINGLE WALL COMBUSTION AIR DUCT FROM ROOF INTAKE; SEE DETAIL, SHT. M-501. ALL COMBUSTION AIR INLET DUCT TO HAVE 1" DUCTWRAP.
2. (2) 6" TYPE 'B' FLUE OUTLET CONNECTION PANTS LEGGED TO 8" TYPE 'B' VENT RISER THRU ROOF; SEE DETAIL, SHT. M-501.
3. CONTROL OF THE NEW INFRA-RED HEATERS SHALL BE A JOHNSON CONTROLLER RELAYING THE OPERATION OF THE HEATERS FROM THE BASE EMCS WITH A SINGLE WALL THERMOSTAT INPUT.
4. SEE TYPICAL GAS PIPING CONNECTION DETAIL TO INFRA-RED HEATERS; TYPICAL 6 PLACES.
5. FOUR SIDEWALL PROP FANS; TOP OF FAN MOUNTED APPROX. 28'-6" A.F.F.; FANS MOUNTED IN A SHEETMETAL SLEEVE W/AN EXTERIOR SHUTTER; FANS CONTROLLED MANUALLY WITH LABELED SWITCH MOUNTED 5'-6" AFF ON WALL.
6. EMERGENCY AIR DISTRIBUTION SHUT-OFF BUTTONS. VERIFY EXACT LOCATIONS IN THE FIELD. THE SHUT-OFF BUTTONS SHALL BE LOCATED NEAR THE MASS NOTIFICATION SYSTEM PANELS, AND SHALL BE COORDINATED WITH THE END USER AND BASE PERSONNEL. EMERGENCY AIR DISTRIBUTION SHUT-OFF BUTTONS SHALL BE LABELED AND PROTECTED BY A COVER TO PREVENT ACCIDENTAL INITIATION AND SHALL BE IN CONTROLLED ACCESSIBLE LOCATIONS. SHUTDOWN SWITCHES (MIN. QTY=2).
7. HIGH VOLUME LOW SPEED FANS (QTY=3)
8. TWO NEW 48"x36" LOUVERS WITH AUTOMATIC DAMPERS; PLACE HIGH IN GABLE ENDS OF HANGAR. INTERLOCK WITH FOAM SUPPRESSION CONTROL PANEL; SEE FIRE SUPPRESSION DRAWINGS.

N
PLAN NORTH
TRUE NORTH

NEW WORK FLOOR PLAN
SCALE: 3/32" = 1'-0"

3/32"= 1'-0"
10' 0 10' 20'

PETERSON ENGINEERING INC.
(PROF. ENG. #: 3600)
75 SOUTH "F" STREET
PENSACOLA, FLORIDA 32502
(850) 434-0513

GREGORY D. PETERSON LICENSED PROFESSIONAL ENGINEER 13801 STATE OF MISSISSIPPI

FINAL SUBMITTAL FOR CONSTRUCTION

14TH CIVIL ENGINEER SQ
BEST SERVING THE BEST

Symbol	No.	Description	Date	Approved
		REVISIONS		

Designed By: JOHNSON
Drawn By: VCHULEK
Checked By: JOHNSON
Reviewed By: PETERSON
Date: 06 SEP 2017
File No. .
CADD File Name: .
Solicitation Number: EEPZ 10-1001

COLUMBUS AIR FORCE BASE

HEFFERNAN HOLLAND MORGAN
ARCHITECTURE
319 S. ALCANIZ ST. • PENSACOLA, FL 32502
850.433.2799 • AAC001942 • HHMA.COM

REPAIR MAINTENANCE HANGAR 456

NEW WORK FLOOR PLAN

Sheet
M-102

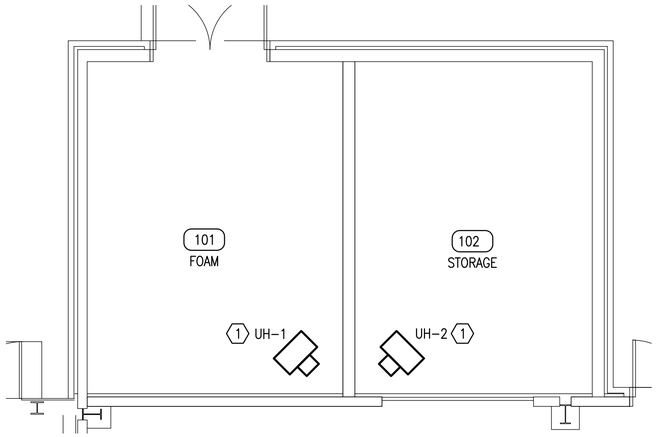

N
PLAN NORTH
TRUE NORTH
2 M102 M103
RM101 & 102 ENLARGED PLAN – NEW WORK
4' 2' 0' 4' 8'
SCALE: 1/4" = 1'-0"

RM 101 & 102 ENLARGED PLAN NOTES

1. COMBINATION AIR FROM ROOF AND 4" FLUE THRU ROOF; UNIT HEATERS, (QTY 2) SUPPORTED FROM BAR JOIST. SEE DETAILS.

ENLARGED PLAN NOTES:

2. 4" BELOW GRADE PVC SLEEVE FOR REFRIGERANT PIPING AND CONTROL WIRING.
3. WALL MOUNTED. DUCTLESS SPLIT SYSTEM AHU–1.
4. AHU–2 ON NON–COMBUSTIBLE RAISED RETURN AIR PLENUM.
5. AHU–3 ON NON–COMBUSTIBLE RAISED RETURN AIR PLENUM.
6. COMBUSTION AIR INLET FROM ROOF TO SERVE UH–1 AND UH–2.
7. INLINE EXHAUST FAN DUCTED OUT SIDEWALL WITH LOW LEAKAGE MOTORIZED DAMPER.
8. WATER HEATER; SEE PLUMBING.
9. EMERGENCY HVAC SHUTDOWN SWITCHES (QTY 2).
10. CONDENSING UNITS MOUNTED ON 6" CONCRETE PADS.

MECHANICAL GENERAL NOTES:

1. PROVIDE THE REFRIGERANT SUCTION PIPING WITH CLOSED CELL INSULATION. THE EXTERIOR PORTION OF THAT PIPING SHALL ALSO HAVE ALUMINUM JACKETING.
2. THE INDOOR UNITS AND THE PLENUM BOXES WHICH SUPPORT THE UNITS SHALL BE INSULATED SINCE THEY ARE LOCATED IN A HUMID MECHANICAL ROOM.
3. PROVIDE THE SERVICES OF A TEST AND BALANCE SUB–CONTRACTOR FOR THIS CONTRACT.

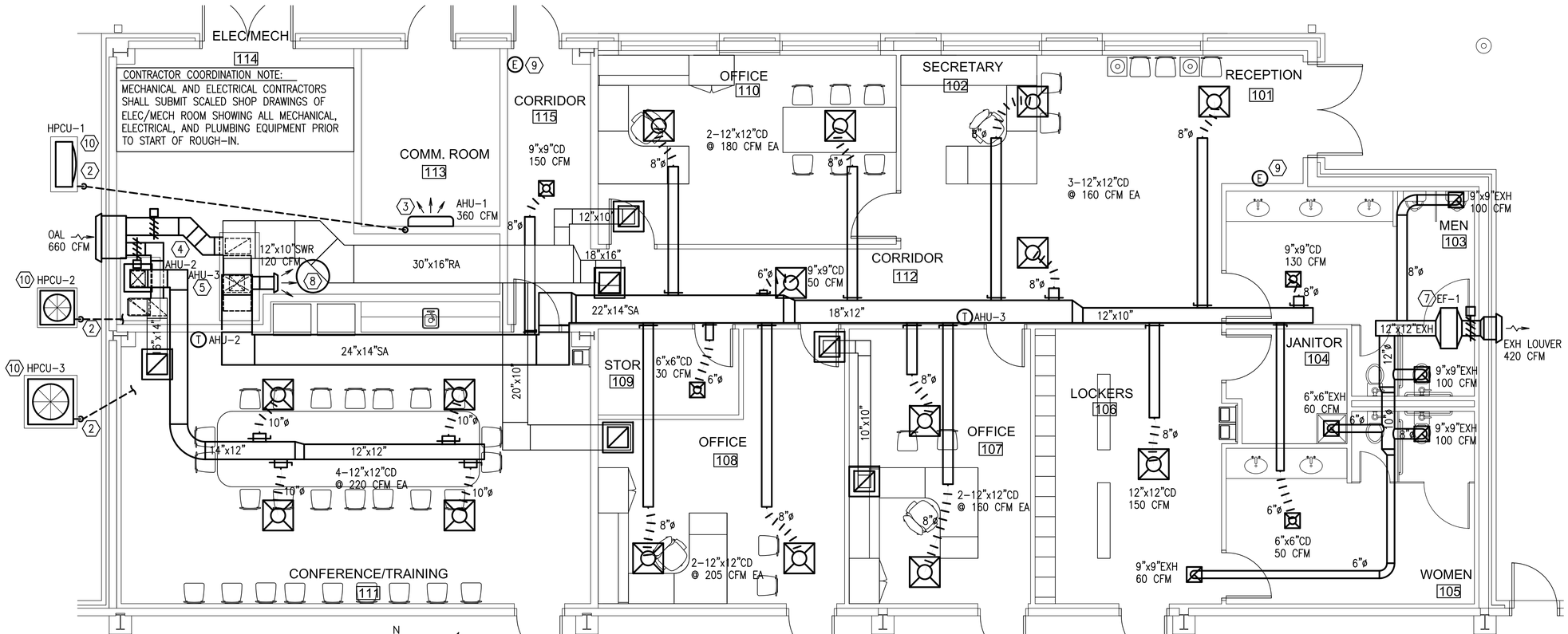

N
PLAN NORTH
TRUE NORTH
1 M102 M103
ENLARGED PLAN – NEW WORK
4' 2' 0' 4' 8'
SCALE: 1/4" = 1'-0"

PETERSON ENGINEERING INC.
(PROF. ENG. #: 3600)
75 SOUTH "F" STREET
PENSACOLA, FLORIDA 32502
(850) 434–0513

GREGORY D. PETERSON — REGISTERED PROFESSIONAL ENGINEER — 38011 — STATE OF MISSISSIPPI

FINAL SUBMITTAL FOR CONSTRUCTION

14TH CIVIL ENGINEER SQ — BEST SERVING THE BEST

Symbol	No.	Description	Date	Approved

REVISIONS

Designed By: JOHNSON
Drawn By: VCHULEK
Checked By: JOHNSON
Reviewed By: PETERSON
Date: 06 SEP 2017
File No. .
CADD File Name: .
Solicitation Number: EEPZ 10–1001

COLUMBUS AIR FORCE BASE

HERFERNAN HOLLAND MORGAN
ARCHITECTURE
312 S.ALCANIZ ST • PENSACOLA, FL 32502
850.433.9799 • AAC0001942 • HHMA.COM

REPAIR MAINTENANCE HANGAR 456

ENLARGED FLOOR PLANS

Sheet
M-103

SHEET NOTES:

GENERAL: FIRE SUPPRESSION PIPING AND OTHER MISCELLANEOUS EQUIPMENT SHOWN AS INFORMATION ONLY. WORK ON THIS DRAWING IS LIMITED TO THE FOLLOWING:

1. FURNISH AND INSTALL DIRECT DRIVE SIDEWALL PROP EXHAUST FAN, COMPLETE WITH MANUFACTURERS WALL HOUSING, BACKDRAFT DAMPER AND WEATHERHOOD; WALL MOUNT THERMOSTAT. FAN ON WHEN INDOOR TEMP IS OVER (ADJUSTABLE).
2. FURNISH AND INSTALL NEW INTAKE LOUVER EQUAL TO RUSKIN EME6625 WITH AUTOMATIC DAMPER. INTERLOCK DAMPER WITH EXHAUST FAN TO OPEN WHEN FAN IS OPERATIONAL.
3. FURNISH AND INSTALL NEW 5.0KW ELECTRIC UNIT HEATER WITH UNIT MOUNTED THERMOSTAT. SET THERMOSTAT AT 50°F (ADJUSTABLE).

PUMP HOUSE HVAC PLAN

SCALE: 1/4"=1'-0"

N
TRUE NORTH

PETERSON ENGINEERING INC.
(PROF. ENG. #: 3600)
75 SOUTH "F" STREET
PENSACOLA, FLORIDA 32502
(850) 434-0513

GREGORY D. PETERSON
LICENSED PROFESSIONAL ENGINEER
38011
STATE OF MISSISSIPPI

FINAL SUBMITTAL
FOR CONSTRUCTION

14TH CIVIL ENGINEER SQ
BEST SERVING THE BEST

Symbol No.	Description	Date	Approved
	REVISIONS		

Designed By: JOHNSON
Drawn By: VCHULEK
Checked By: JOHNSON
Reviewed By: PETERSON
Date: 06 SEP 2017
File No. .
CADD File Name: .
Solicitation Number: EEPZ 10-1001

COLUMBUS
AIR FORCE BASE

HERRERNAN HOLLAND MORGAN
ARCHITECTURE
319 S. ALCANIZ ST. • PENSACOLA, FL 32502
850.433.2799 • AAC001942 • HHMA.COM

REPAIR MAINTENANCE
HANGAR 456

PUMP HOUSE HVAC PLAN

Sheet
M-104

D:\PROJECTV2014\14166 Design Build Hangar 456 (Columbus, MS)\DWG\Mech\14166M104.dwg, 9/13/2017 10:05:25 AM, DWG To PDF.pc3

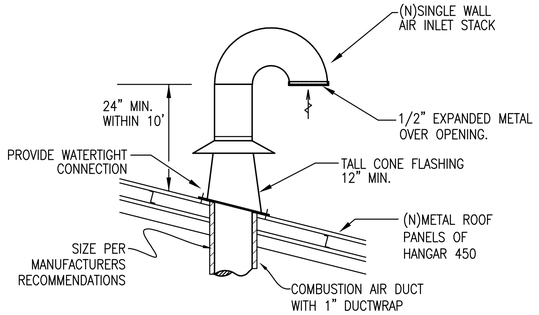

ROOF COMBUSTION AIR INLET

NOT TO SCALE (APPLIES TO IRH & UNIT HEATERS)

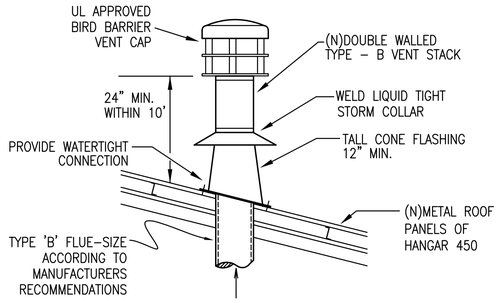

ROOF FLUE DETAIL

NOT TO SCALE (APPLIES TO IRH & UNIT HEATERS)

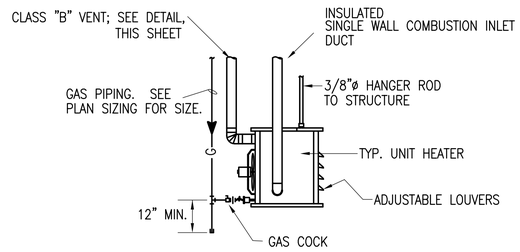

GAS FIRED UNIT HEATER DETAIL

NOT TO SCALE (SIMILAR FOR UH–1, 2 AND 3)

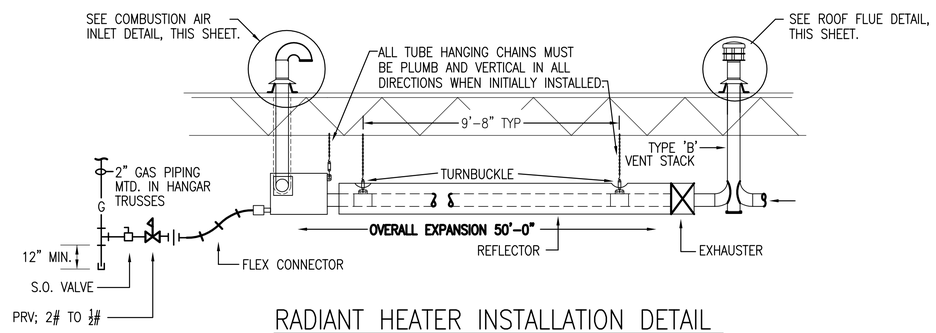

RADIANT HEATER INSTALLATION DETAIL

NOT TO SCALE (TYP., 6 PLACES)

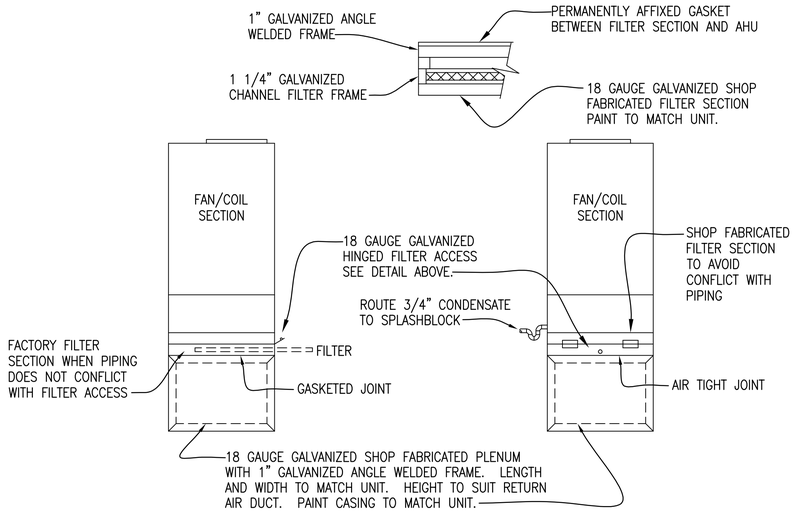

NOTE:
FACTORY FILTER SECTION MUST BE FURNISHED EXCEPT WHEN FILTER ACCESS CAN'T BE ORIENTATED TO AVOID CONFLICT WITH PIPING.

ROUTE CONDENSATE AND REFRIGERANT PIPING TO MAINTAIN FILTER ACCESS.

TYPICAL AHU PLENUM/FILTER DETAIL

NOT TO SCALE

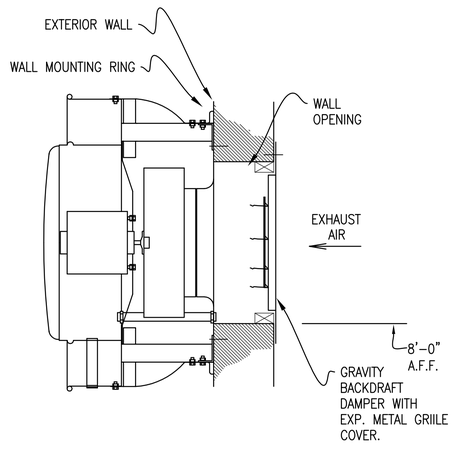

SIDEWALL EXHAUST FAN DETAIL

NOT TO SCALE

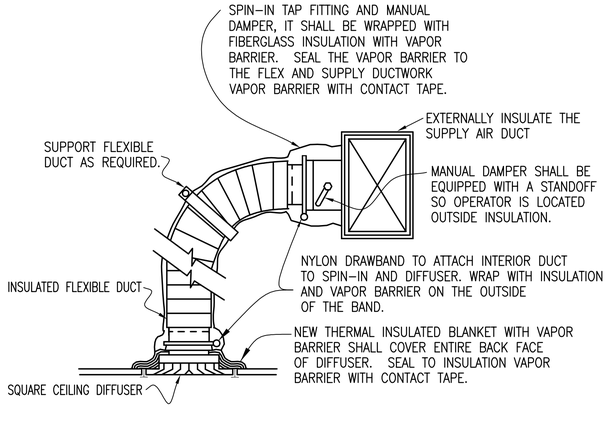

PANEL DIFFUSER DETAIL

NOT TO SCALE

PETERSON ENGINEERING INC.
(PROF. ENG. #: 3600)
75 SOUTH "F" STREET
PENSACOLA, FLORIDA 32502
(850) 434–0513

GREGORY D. PETERSON
LICENSED PROFESSIONAL ENGINEER
138011
STATE OF MISSISSIPPI

FINAL SUBMITTAL
FOR CONSTRUCTION

14TH CIVIL ENGINEER SQ
BEST SERVING THE BEST

Symbol	No.	Description	Date	Approved
		REVISIONS		

Designed By: JOHNSON
Drawn By: VCHULEK
Checked By: JOHNSON
Reviewed By: PETERSON
Date: 06 SEP 2017
File No. .
CADD File Name: .
Solicitation Number: EEPZ 10–1001

COLUMBUS
AIR FORCE BASE

HEFFERNAN HOLLAND MORGAN
ARCHITECTURE
312 S. ALCANIZ ST. • PENSACOLA, FL 32502
850.433.2799 • AAC001942 • HHMA.COM

REPAIR MAINTENANCE
HANGAR 456

MECHANICAL DETAILS

Sheet
M-501

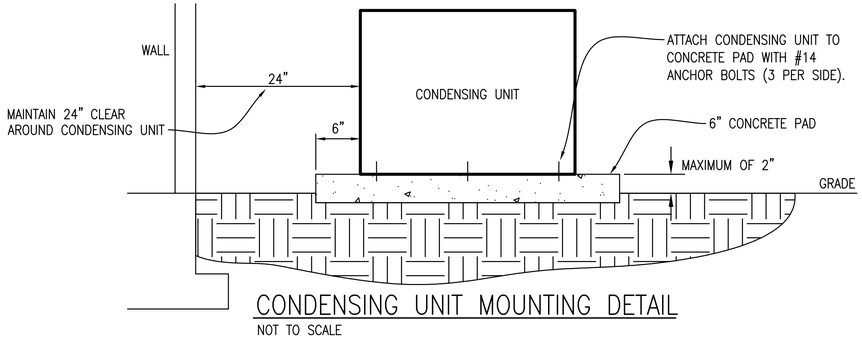

CONDENSING UNIT MOUNTING DETAIL

NOT TO SCALE

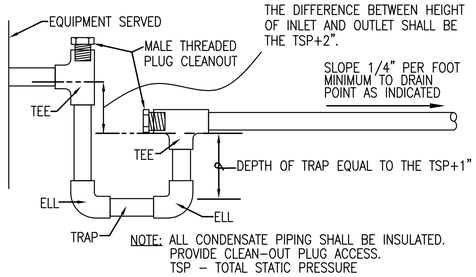

TYPICAL CONDENSATE DRAIN DETAIL DRAW THROUGH UNIT

NOT TO SCALE

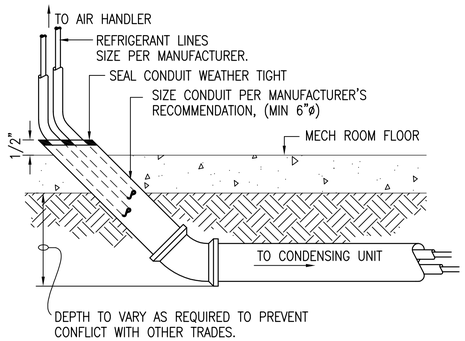

INTERIOR REFRIGERANT LINE AND CONDUIT PENETRATION DETAIL

NOT TO SCALE

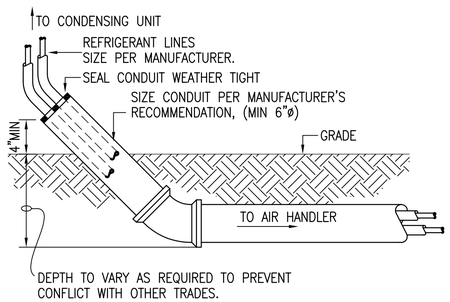

EXTERIOR REFRIGERANT LINE AND CONDUIT PENETRATION DETAIL

NOT TO SCALE

PETERSON ENGINEERING INC.
(PROF. ENG. #: 3600)
75 SOUTH "F" STREET
PENSACOLA, FLORIDA 32502
(850) 434-0513

GREGORY D. PETERSON LICENSED PROFESSIONAL ENGINEER 13801 STATE OF MISSISSIPPI

FINAL SUBMITTAL
FOR CONSTRUCTION

14TH CIVIL ENGINEER SQ
BEST SERVING THE BEST

Symbol	No.	Description	Date	Approved
		REVISIONS		

Designed By: JOHNSON
Drawn By: VCHULEK
Checked By: JOHNSON
Reviewed By: PETERSON
Date: 06 SEP 2017
File No. .
CADD File Name: .
Solicitation Number: FA8903-17-R-EEPZ 10-1001

COLUMBUS AIR FORCE BASE

HERBERMAN HOLLAND MORGAN
ARCHITECTURE
312 S. ALCANIZ ST. • PENSACOLA, FL 32502
850.433.2799 • AA0001942 • HHMA.COM

REPAIR MAINTENANCE HANGAR 456

MECHANICAL DETAILS

Sheet
M-502

GAS FIRED UNIT HEATER SCHEDULE

MARK	MIN CFM	ROOM	BURNER DATA			INLET GAS PRESSURE	FLUE & COMB. AIR	TYPE OF DISCHARGE	TYPE OF DRIVE	MOTOR WATTS	ELECTRICAL			REMARKS
			INPUT MBH	OUTPUT MBH	FUEL						VOLTS AMP	PH	HZ	
UH-1	460	FOAM	30	25	NATURAL GAS	1/2#	4"ø	HORIZ.	DIRECT	155	115 2.4	1	60	UNIT W/BOTH COMB. & DISC. FLUE CONN. (1)
UH-2	460	STORAGE	30	25	NATURAL GAS	1/2#	4"ø	HORIZ.	DIRECT	155	115 2.4	1	60	UNIT W/BOTH COMB. & DISC. FLUE CONN. (1)

(1) HEATER SHALL BE AN AXIAL FAN UNIT HEATER, COMPLETELY FACTORY ASSEMBLED, PIPED, AND WIRED. UNIT SHALL BE AGA CERTIFIED. UNIT SHALL BE PROVIDED WITH 24 VOLT WALL MOUNTED THERMOSTAT. UNIT SHALL COME WITH VALVES, TRANSFORMER, GAS REGULATOR, RELAYS, SAFETIES, AND ELECTRONIC FLAME SUPERVISION FOR COMPLETE CONTROL OPERATION. UNIT SHALL HAVE MULTI-TRY ELECTRONIC SPARK IGNITION WITH 100% LOCKOUT. UNIT SHALL HAVE FULL FAN GUARD.

DUCTLESS SPLIT SYSTEM HEAT PUMP

INDOOR UNIT(AHU-1)							OUTDOOR UNIT(CU-1)							REMARKS
MARK	TYPE	CAPACITY MBH	ELECTRICAL				MARK	TYPE	HEAT REJ	ELECTRICAL				
			VOLT	PHASE	FLA	MCA				VOLT	ø	AMP	MCA	
AHU-1	WALL MTD. HEAT PUMP	12	208	1	.76	1	HPCU-1	AIR COOLED HORIZ. DISC.	12 MBH	208	1	6.6	12	(1)(2) SERVES COMM. ROOM

(1) UNIT PROVIDED WITH INTEGRAL CONTROLS

(2) CONDENSING UNIT MTD. ON 6" CONCRETE PAD

PUMP HOUSE ELECTRIC UNIT HEATER SCHEDULE

MARK	CAPACITY KW RATING	CFM	TYPE OF DISCHARGE	LOUVERS	MAX. AMP RATING	ELECTRICAL DATA			REMARKS
						VOLTS	PHASE	Hz	
EUH-1	5 KW	400	HORIZ	ADJ	6.1	480	3	60	BELOW

NOTES:
HEATER SHALL BE A PROPELLER FAN UNIT, COMPLETELY FACTORY ASSEMBLED, AND WIRED.
HEATER SHALL BE PROVIDED WITH A 24 VOLT WALL MOUNTED THERMOSTAT.
HEATER SHALL COME WITH TRANSFORMER, RELAYS, AND SAFETIES.

HEAT PUMP - AIR HANDLING UNIT SCHEDULE

MARK	AIR DATA			COOLING DESIGN CONDITIONS					HEATING DESIGN CONDITIONS			ELECTRICAL						UNIT FILTER DATA		REMARKS
	TOTAL AIR CFM	OA CFM MAX/MIN	E.S.P. IN H_2O	TOTAL MBTU/HR	SENSIBLE MBTU/HR	COIL ENT. DB °F	COIL ENT. WB °F	MAX FACE VEL. FPM	TOTAL MBTU/HR	AMBIENT F	AUX. ELEC. HEAT TOTAL	VOLTS	PHASE	Hz	BLOWER HP	MIN. EFF (1)	MIN. COP (2)	SIZE / TYPE	MAX. FACE VEL FPM	
AHU-2	880	180/40	0.6	29.9	22.2	79.8	66.4	500	17.4	24°	5 KW	208/230	1	60	1/2	16 SEER	3.4	1" T-AWAY	400	BELOW
AHU-3	2250	480/480	0.8	70.0	53.9	80.0	66.7	500	52.0	24°	15 KW	480	3	60	3.0	11 EER	3.3	1" T-AWAY	400	BELOW

(1) AT ARI CONDITIONS OF 95°F AMB., 80°F D.B. AND 67°F W.B. COIL ENTERING

(2) AT ARI CONDITIONS OF 47°F D.B., 43°F W.B. AMB., 70°F D.B. COIL ENTERING

HEAT PUMP - CONDENSING UNIT SCHEDULE

MARK	DESIGN COOLING		DESIGN HEATING		REF TYPE	NUMBER OF REF. CIRCUITS	COMPRESSORS		FANS		ELECTRICAL					REMARKS
	TOTAL MBTU/HR	AMBIENT °F	TOTAL MBTU/HR	AMBIENT °F			NO.	RLA EACH	NO.	FLA EACH	VOLTS	PHASE	Hz	MCA	MOCP	
HPCU-2	29.9	95.0	17.4	47.0	R410A	1	1	16.7	1	0.94	208/230	1	60	21.8	35	
HPCU-3	70.0	95.0	52.0	47.0	R410A	1	1	25	2	1.5	480	3	60	34.3/34.3	50/50	

FAN SCHEDULE

MARK	LOCATION	TYPE	DRIVE	PERFORMANCE DATA				ELECTRICAL				FAN DIAM.	CONTROL	EQUAL TO	NOTES
				AIR FLOW CFM(EA)	E.S.P. IN. H_2O	MAX. RPM	MAX. SONES	HP	VOLTS	PHASE	Hz				
EF-1 THRU 4	MTD. HIGH ON NORTH WALL OF HANGAR	PROP	BELT	13600	0.4	747	20	2	277	1	60	36"	MANUAL WALL SW	-	1, 2, 3, 4
EF-5	ABOVE CEILING IN RESTROOMS	INLINE	DIRECT	420	0.6	1000	2	.75	115	1	60	-	INTERLOCK W/AHU-3	-	1, 2, 4
HVLSF-1 THRU 3	HANGAR CEILING	CEILING	DIRECT	NA	NA	55	<55dB	2.0	480	3	60	24'-0"	MANUAL WALL SW	BIG ASS FAN POWERFOIL X2.0	1, 2, 4
SWP-1	PUMP HOUSE	SWPE	DIRECT	1400	0.5	1750	20	1/4	115	1	60	16	T-STAT ON WALL	-	5

FAN SCHEDULE LEGEND

ESP - EXTERNAL STATIC PRESSURE
EMS - ENERGY MANAGEMENT SYSTEM
SWPE- SIDEWALL PROP EXHAUST

FAN NOTES

1. ALL EXHAUST FANS SHALL BE INSTALLED WITH FLEXIBLE DUCT CONNECTION, VIBRATION ISOLATORS, AND FLEXIBLE CONDUIT. FAN SHALL NOT BE IN CONTACT WITH ANY OTHER DUCT, PIPING, CONDUIT, OR STRUCTURAL MEMBERS.
2. THE FANS SHALL BE PROVIDED WITH BACKDRAFT DAMPERS.
3. FANS MTD. IN SHEET METAL WALL SLEEVED & FRAMED BY STRUCTURAL ROOF CURBS WITH BACKDRAFT DAMPER.
4. ALL FANS SHALL BE SUBJECT TO THE EMERGENCY AIR DISTRIBUTION SHUT-OFF CONTROLS IN COMPLIANCE WITH ATFP.
5. COMPLETE WITH MANUFACTURERS GALVANIZED WALL HOUSING, BACKDRAFT DAMPER AND WEATHERHOOD; WALL MOUNT THERMOSTAT.

INFRA-RED HEATER SCHEDULE(TYP. OF 6)

MARK	TYPE	BTUH INPUT(MBH)	FUEL		BURNER			REMARKS
			TYPE	INPUT PRESS.	V/Hz/ø/AMP	GAS CONN.	IGNITION	
IRH-1 THRU IRH-6	GAS FIRED TUBULAR RADIANT HEATERS	150	NATURAL GAS	5"wc	115/60/1/2.6	1/2"	DIRECT SPARK BURNER IGNITION	(1)(2) UNIT ACTIVATED FROM BASE EMCS CONTROL

(1) 6" COMB. AIR INLET & FLUE (2) UNIT W/50L.F. REFLECTOR

PETERSON ENGINEERING INC.
(PROF. ENG. #: 3600)
75 SOUTH "F" STREET
PENSACOLA, FLORIDA 32502
(850) 434-0513

GREGORY D. PETERSON — LICENSED PROFESSIONAL ENGINEER — 38011 — STATE OF MISSISSIPPI

FINAL SUBMITTAL
FOR CONSTRUCTION

14TH CIVIL ENGINEER SQ — BEST SERVING THE BEST

REVISIONS

Symbol	No.	Description	Date	Approved

Designed By: JOHNSON
Drawn By: VCHULEK
Checked By: JOHNSON
Reviewed By: PETERSON
Date: 06 SEP 2017
File No. .
CADD File Name: .
Solicitation Number: EEPZ 10-1001

COLUMBUS AIR FORCE BASE

HERFERNAN HOLLAND MORGAN
ARCHITECTURE
319 S.ALCANIZ ST.• PENSACOLA, FL 32502
850.433.2799 • AAC001940 • HHMA.COM

REPAIR MAINTENANCE HANGAR 456

MECHANICAL SCHEDULES

Sheet
M-601

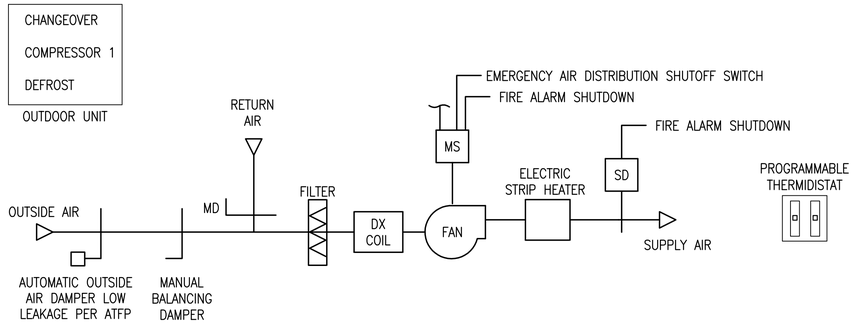

HEAT PUMP UNIT CONTROL – AHU/HPCU-2 (CONFERENCE ROOM)

SEQUENCE OF OPERATION

OCCUPIED MODE:

THE INDOOR UNIT'S FAN SHALL BE STARTED AND RUN BASED ON A SIGNAL FROM THE PROGRAMMABLE THERMIDISTAT ACCORDING TO ITS OCCUPIED/UNOCCUPIED SCHEDULE AS PROGRAMMED INTO THE SYSTEM. OUTSIDE AIR VOLUME DAMPER SHALL BE CONTROLLED BASED ON A MEASUREMENT OF THE CO2 LEVEL IN THE CONFERENCE ROOM. IF CO2 LEVELS ARE ABOVE 1000PPM, THE OUTSIDE AIR DAMPER SHALL OPEN TO DELIVER THE MAXIMUM SCHEDULED OUTSIDE AIR CFM. IF CO2 LEVELS ARE BELOW 500PPM, THE OUTSIDE AIR DAMPER SHALL ADJUST TO DELIVER THE MINIMUM SCHEDULED OUTSIDE AIR CFM. WHEN ROOM TEMPERATURE RISES ABOVE THE COOLING SET POINT THE OUTDOOR UNIT REVERSING VALVE AND DX COOLING SHALL BE CYCLED AS NEEDED TO SATISFY SPACE COOLING REQUIREMENTS. WHEN ROOM TEMPERATURE FALLS BELOW THE HEATING SET POINT THE OUTDOOR UNIT REVERSING VALVE AND ONE STAGE OF COMPRESSOR HEAT SHALL BE CYCLED AS NEEDED TO SATISFY SPACE HEATING REQUIREMENTS. IF OUTSIDE AIR TEMPERATURE IS BELOW 35°F AND COMPRESSOR HEAT IS INSUFFICIENT TO SATISFY SPACE HEATING DEMAND THE ELECTRIC AUXILIARY HEAT SHALL CYCLE ON. WHEN THE OUTDOOR UNIT DEFROST CIRCUIT IS ACTIVATED THE AUXILIARY HEAT SHALL CYCLE AS NEEDED TO PREVENT OVERCOOLING THE SPACE. WHEN ROOM HUMIDITY RISES ABOVE SETPOINT AND THE SPACE TEMPERATURE SETPOINT IS SATISFIED, THE UNIT SHALL ENTER DEHUMIDIFICATION MODE. IT SHALL REMAIN IN DEHUMIDIFICATION MODE UNTIL THE SETPOINT (60% RH – ADJ) IS MET OR THE SPACE TEMP HAS FALLEN TO 3°F BELOW THE COOLING SETPOINT.

UNOCCUPIED MODE: SAME AS OCCUPIED EXCEPT OA DAMPER SHALL BE CLOSED AND THE OUTSIDE AIR CONTROL LOOP DISABLED.

HEAT PUMP UNIT CONTROL – AHU/HPCU-3 (ADMIN AREAS)

SEQUENCE OF OPERATION

OCCUPIED MODE:

THE INDOOR UNIT'S FAN SHALL BE STARTED AND RUN BASED ON A SIGNAL FROM THE PROGRAMMABLE THERMIDISTAT ACCORDING TO ITS OCCUPIED/UNOCCUPIED SCHEDULE AS PROGRAMMED INTO THE SYSTEM. OUTSIDE AIR DAMPER SHALL BE OPEN. WHEN ROOM TEMPERATURE RISES ABOVE THE COOLING SET POINT THE OUTDOOR UNIT REVERSING VALVE AND DX COOLING SHALL BE CYCLED AS NEEDED TO SATISFY SPACE COOLING REQUIREMENTS. WHEN ROOM TEMPERATURE FALLS BELOW THE HEATING SET POINT THE OUTDOOR UNIT REVERSING VALVE AND ONE STAGE OF COMPRESSOR HEAT SHALL BE CYCLED AS NEEDED TO SATISFY SPACE HEATING REQUIREMENTS. IF OUTSIDE AIR TEMPERATURE IS BELOW 35°F AND COMPRESSOR HEAT IS INSUFFICIENT TO SATISFY SPACE HEATING DEMAND THE ELECTRIC AUXILIARY HEAT SHALL CYCLE ON. WHEN THE OUTDOOR UNIT DEFROST CIRCUIT IS ACTIVATED THE AUXILIARY HEAT SHALL CYCLE AS NEEDED TO PREVENT OVERCOOLING THE SPACE. WHEN ROOM HUMIDITY RISES ABOVE SETPOINT AND THE SPACE TEMPERATURE SETPOINT IS SATISFIED, THE UNIT SHALL ENTER DEHUMIDIFICATION MODE. IT SHALL REMAIN IN DEHUMIDIFICATION MODE UNTIL THE SETPOINT (60% RH – ADJ) IS MET OR THE SPACE TEMP HAS FALLEN TO 3°F BELOW THE COOLING SETPOINT.

UNOCCUPIED MODE: SAME AS OCCUPIED EXCEPT OA DAMPER SHALL BE CLOSED.

EMERGENCY AIR DISTRIBUTION SHUTOFF SWITCH

INSTALL A RED LIGHTED PUSH-BUTTON, PULL-TO-RESET BUTTON THAT WILL SHUT DOWN ALL BUILDING AIR MOVEMENT DEVICES AND COMMAND ALL DAMPERS (SUPPLY AND EXHAUST) TO THE OUTSIDE CLOSED. THE BUTTON SHALL BE LOCATED UNDER AN INDIVIDUAL CLEAR ACRYLIC COVER AND LABELED, "HVAC EMERGENCY SHUTDOWN". LOCATE THE BUTTON AS SHOWN ON THE PLANS. EMERGENCY SHUTDOWN WILL BE EQUAL PRIORITY TO FIRE ALARM SHUTDOWN INTERLOCKS.

PETERSON ENGINEERING INC.
(PROF. ENG. #: 3600)
75 SOUTH "F" STREET
PENSACOLA, FLORIDA 32502
(850) 434-0513

GREGORY D. PETERSON – LICENSED PROFESSIONAL ENGINEER – 38014 – STATE OF MISSISSIPPI

FINAL SUBMITTAL
FOR CONSTRUCTION

14TH CIVIL ENGINEER SQ
BEST SERVING THE BEST

Symbol	No.	Description	Date	Approved

REVISIONS

Designed By: JOHNSON
Drawn By: VCHULEK
Checked By: JOHNSON
Reviewed By: PETERSON
Date: 06 SEP 2017
File No. .
CADD File Name: .
Solicitation Number: EEPZ 10-1001

COLUMBUS AIR FORCE BASE

ARCHITECTURE

HEFFERNAN HOLLAND MORGAN
312 S. ALCANIZ ST. • PENSACOLA, FL 32502
850.433.2799 • AAC001940 • HHMA.COM

REPAIR MAINTENANCE
HANGAR 456

MECHANICAL CONTROLS

Sheet
M-701

ELECTRICAL GENERAL NOTES

1. ENTIRE ELECTRICAL INSTALLATION SHALL BE IN ACCORDANCE WITH THE LATEST ACCEPTED EDITION OF THE NATIONAL ELECTRICAL CODE AND ALL LOCAL CODES.
2. ALL ELECTRICAL WORK AND MATERIALS USED IN THIS PROJECT SHALL BE NEW, UNDERWRITERS' LABORITORIES (UL) LISTED AND LABELED, AND SHALL BE FURNISHED AND INSTALLED BY THE CONTRACTOR UNLESS NOTED OTHERWISE.
3. CONDUIT ROUTINGS AND DEVICE/EQUIPMENT LOCATIONS SHOWN ARE DIAGRAMMATIC ONLY, CONTRACTOR SHALL FIELD ROUTE AND LOCATE AS REQUIRED. CONDUIT ROUTINGS SHALL BE PARALLEL OR PERPENDICULAR TO BUILDING LINES.
4. THE CONDUIT SYSTEMS UTILIZED SHALL BE AS FOLLOWS:
   A) BELOW GRADE – PVC SCHEDULE 80.
   B) TRANSITIONS FROM BELOW GRADE (WHICH SHALL INCLUDE A "RSC" FACTORY 90 DEGREE ELBOW) TO ABOVE GRADE AND/OR THRU SLAB – RIGID GALVANIZED STEEL (RGS).
   C) INTERIOR OF BUILDING CONDUITS – ELECTRIC METALLIC TUBING (EMT) UNLESS NOTED OTHERWISE.
   D) EXTERIOR OF BUILDING EXPOSED ABOVE FINISHED GRADE – RIGID GALVANIZED STEEL (RGS) UNLESS NOTED OTHERWISE.
   E) FINAL 36" OF CONDUIT CONNECTED TO MOTORS AND DRY TYPE TRANSFORMERS – LIQUIDTIGHT FLEXIBLE CONDUIT (LFMC).
   F) AREAS SUBJECT TO MOISTURE – RIGID GALVANIZED STEEL (RGS).
5. ALL NEW CONDUITS RUN UNDERGROUND SHALL HAVE A MINIMUM BURIAL DEPTH OF 36" UNLESS NOTED OTHERWISE.
6. NEW CONDUITS LEAVING OR ENTERING BUILDING SHALL BE SEALED PER N.E.C. TO PREVENT ENTRANCE OF MOISTURE.
7. COORDINATE LOCATIONS OF ALL NEW ELECTRICAL EQUIPMENT, DEVICES, OUTLETS, FIXTURES, ETC., WITH ARCHITECTURAL PLANS, ELEVATIONS AND REFLECTED CEILING PLANS PRIOR TO ROUGH-IN WORK.
8. WHERE CONFLICTS OCCUR ON ELECTRICAL DRAWINGS BETWEEN DRAWINGS, SPECIFICATIONS AND CODES, THE MOST STRINGENT REQUIREMENT THAT APPLIES SHALL BE ADHERED TO. (UNLESS OVERRIDDEN BY THE CEPM)
9. ELECTRICAL CONTRACTOR SHALL FIELD VERIFY ALL EXISTING CONDITIONS PRIOR TO BEGINNING ANY WORK AND SHALL IMMEDIATELY NOTIFY THE GOVERNMENT INSPECTOR OF ANY DISCREPANCIES. FAILURE TO DO SO INDICATES THAT THE CONTRACTOR ACCEPTS THE CONDITIONS AS THEY EXIST AND SHALL PERFORM THE WORK AS SHOWN AND SPECIFIED.
10. CONTRACTOR SHALL COORDINATE ALL WORK WITH OTHER TRADES PRIOR TO INSTALLATION. REFER TO MECHANICAL AND PLUMBING DRAWINGS FOR EXACT LOCATION AND SIZE OF EQUIPMENT WHICH ARE PROVIDED BY OTHERS AND CONNECTED BY ELECTRICAL.
11. PROVIDE A 6'-0" MAXIMUM FLEXIBLE CONNECTION FROM EACH RECESSED LIGHTING FIXTURE TO OUTLET BOX ABOVE CEILING.
12. ALL NEW OUTLET BOXES FOR MOUNTING LIGHTING FIXTURES SHALL BE MINIMUM 4" SQUARE OR OCTAGONAL X 1 1/2" DEEP UNLESS NOTED OTHERWISE.
13. ALL OUTLET BOXES FOR NEW POWER RECEPTACLES SHALL BE 4" SQUARE X 1 1/2" DEEP UNLESS NOTED OTHERWISE. COMMUNICATION RECEPTACLES SHALL BE SINGLE GANG.
14. VERIFY ALL DOOR SWINGS WITH ARCHITECTURAL DRAWINGS PRIOR TO ROUGHING IN FOR SWITCHES.
15. NEW WALL OUTLETS SHALL NOT BE INSTALLED BACK TO BACK.

ALL NEW PANELBOARDS AND SAFETY SWITCH DISCONNECTS SHALL BE FURNISHED WITH LAMINATED PLASTIC NAMEPLATES. NAMEPLATES SHALL BE MELAMINE PLASTIC, 0.125" THICK, WHITE WITH BLACK CENTER CORE. SURFACE SHALL BE MATTE FINISHED. CORNERS SHALL BE SQUARE. ACCURATELY ALIGN LETTERING AND ENGRAVE INTO THE CORE. MINIMUM SIZE OF NAMEPLATES SHALL BE 1" X 2 1/2". LETTERING SHALL BE A MINIMUM OF .25" HIGH, NORMAL BLOCK STYLE.

16. NEW SAFETY SWITCH DISCONNECTS SHALL BE MOUNTED AT 48" A.F.F. TO CENTER AND SHALL HAVE 3'-0" MIN. OF WORKING SPACE IN FRONT OF DISCONNECT; COORDINATE WITH MECHANICAL CONTRACTOR AND EQUIPMENT LOCATIONS.
17. FINAL CONDUIT CONNECTIONS TO HEAT PUMPS, AIR HANDLERS, EXHAUST FANS, AND ELECTRIC WATER HEATERS SHALL BE LIQUID TIGHT FLEXIBLE METAL.
18. ALL NEW PANELBOARDS, MAIN BREAKER WHERE STIPULATED, SHALL NOT BE ALLOWED IN BRANCH BREAKER SPACES, MAIN BREAKER WILL ONLY BE PERMITTED ABOVE OR BELOW THE BRANCH BREAKER AREA.
19. BUSBARS ARE TO BE PROVIDED FOR ALL POLES INDICATED ON PANEL SCHEDULE, REGARDLESS OF WHETHER POLES ARE SHOWN WITH CIRCUIT BREAKERS OR "SPACE ONLY".
20. USE OF SERIES RATED CIRCUIT BREAKERS IS NOT ALLOWED.
21. USE OF PLUG-IN CIRCUIT BREAKERS IS NOT ALLOWED.
22. ALL PANELBOARDS SHALL BE FURNISHED WITH DOOR-IN-DOOR CONSTRUCTION.
23. PROVIDE A TYPED PANELBOARD DIRECTORY FOR ALL ELECTRICAL PANELBOARDS IN THIS CONTRACT. MOUNT IN HOLDER BEHIND A TRANSPARENT PROTECTIVE COVERING. PANELBOARD DIRECTORIES SHALL INDICATE SOURCE OF FEEDER TO PANELBOARD (I.E.: PANEL "B" FED FROM PANEL "MP"). HANDWRITTEN PANELBOARD DIRECTORIES IS UNACCEPTABLE.
24. ALL FIRE ALARM CIRCUITS SHALL BE TERMINATED ON TERMINAL STRIPS. WIRE NUTS ARE PROHIBITED.
25. THE CONTRACTOR SHALL NOTIFY THE CONTRACTING OFFICER 30 DAYS BEFORE THE PRELIMINARY AND ACCEPTANCE FIRE ALARM TESTS ARE TO BE CONDUCTED. THE TESTS SHALL BE IN ACCORDANCE WITH THE APPROVED TESTS PROCEDURES IN THE PRESENCE OF THE CONTRACTING OFFICER. THE CONTRACTOR SHALL FURNISH ALL INSTRUMENTS AND PERSONNEL REQUIRED FOR THE TESTS.
26. PROVIDE EACH RECEPTACLE WITH IDENTIFICATION LABEL INDICATING PANELBOARD BRANCH CIRCUIT NUMBER. LETTERS SHALL BE A MINIMUM OF 1/4 INCHES IN HEIGHT.
27. ALL DEVICES INSTALLED IN PLENUM SHALL BE RATED AS SUCH.
28. PROVIDE BLOCKING AT ALL FLAT SCREEN AND MONITOR LOCATIONS TO SUPPORT HANGING EQUIPMENT.

ELECTRONIC SYSTEMS NOTE:

1. AS DEFINED IN PROJECT SOW SECTION 12. "ELECTRONICS," CONTRACTOR WILL PROVIDE STRUCTURED CABLING SYSTEMS DESIGN (NIPR, CATV) THROUGH COORDINATION WITH BASE COMM SQUADRON UNDER THIS CONTRACT.
2. UNDER SEPARATE CONTRACT, BASE COMM SQUADRON WILL PROVIDE COMPLETE INSTALLATION OF STRUCTURED CABLING SYSTEM.
3. CONTRACTOR WILL PROVIDE SUPPORTING INFRASTRUCTURE FOR GOVERNMENT FURNISHED AND INSTALLED STRUCTURED CABLING SYSTEM.

ELECTRICAL GENERAL NOTES

CEILING OUTLETS

"A" — RECESSED/SURFACE FLUORESCENT FIXTURE MARK "A"

'NL' — INDICATES FIXTURE WITH EMERGENCY UNIT BATTERY PACK; 'NL' DENOTES NIGHT LIGHT; THE FIXTURE SHALL BE WIRED FOR CONTINUOUS OPERATION

PENDANT HUNG FLUORESCENT STRIP FIXTURE

INDICATES FIXTURE WITH EMERGENCY UNIT BATTERY PACK

EXIT LIGHT

(J) JUNCTION BOX

EF EXHAUST FAN

WALL OUTLETS

DUPLEX RECEPTACLE – 20 AMP, 125 VOLT, 2 POLE, 3 WIRE GROUNDED TYPE, NEMA 5-20R. MOUNT 18" A.F.F. UNLESS NOTED OTHERWISE

G DUPLEX RECEPTACLE – 20 AMP, 125 VOLT, GFI, 2 POLE, 3 WIRE GROUNDED TYPE, NEMA 5-20R. MOUNT 18" A.F.F. UNLESS NOTED OTHERWISE

WP DUPLEX RECEPTACLE – 20 AMP, 125 VOLT, GFI, 2 POLE, 3 WIRE GROUNDED TYPE, NEMA 5-20R. MOUNT 18" A.F.F. UNLESS NOTED OTHERWISE; PROVIDE WEATHERPROOF BOX FOR RECEPTACLE

DUPLEX RECEPTACLE – 20 AMP, 125 VOLT, 2 POLE, 3 WIRE GROUNDED TYPE, NEMA 5-20R. MOUNT 6" ABOVE COUNTER

G DUPLEX RECEPTACLE – 20 AMP, 125 VOLT, GFI, 2 POLE, 3 WIRE GROUNDED TYPE, NEMA 5-20R. MOUNT 6" ABOVE COUNTER

QUADRAPLEX RECEPTACLE – 20 AMP, 125 VOLT, 2 POLE, 3 WIRE GROUNDED TYPE, NEMA 5-20R. MOUNT 18" A.F.F. UNLESS NOTED OTHERWISE

T-38 MULE RECEPTACLE

(J) JUNCTION BOX WITH BLANK SCREW COVER AND FLEXIBLE CONDUIT CONNECTION

(P) SIDEWALL PHOTOCELL EQUAL TO TORK #2101 (120V)

WALL MOUNTED EXIT LIGHT

WALL MOUNTED HIGH INTENSITY DISCHARGE FIXTURE

INDICATES FIXTURE WITH EMERGENCY BATTERY PACK

WALL MOUNTED BATHROOM FLUORESCENT FIXTURE

WALL SWITCHES (UNLESS OTHERWISE NOTED, MOUNT 48" A.F.F.)

S A.C. TYPE, SINGLE POLE, 20 AMP, 120/277 VOLT

S_{3a} A.C. TYPE, 3-WAY, 20 AMP, 120/277 VOLT, 'a' DENOTES ZONE

S_{4a} A.C. TYPE, 4-WAY, 20 AMP, 120/277 VOLT, 'a' DENOTES ZONE

S_{RD} WALL MOUNTED OPCCUPANCY SENSOR; DUAL TECHNOLOGY TYPE TECHNOLOGY; MOUNT 48" AFF TO C/L

LIGHTING CONTROLS

360° CEILING MOUNTED OCCUPANCY SENSOR WITH ASSOCIATED POWER PACK WITH DUAL TECHNOLOGY (INFRARED AND ULTRASONIC)

BRANCH CIRCUITING

RUN CONCEALED UNDER FLOOR OR IN GRADE

RUN CONCEALED IN CEILING OR WALLS

LA-1 HOMERUN TO PANEL. ANY CIRCUIT WITHOUT FURTHER IDENTIFICATION INDICATES 2 #12, 1 #12 GROUND – 1/2" C; 3 #12, 1 #12 GROUND – 1/2" C; 4 #12, 1 #12 GROUND – 1/2" C; ETC. AS PER NEC. LETTERS AND NUMERALS INDICATE PANEL AND CIRCUIT NUMBER.

LIQUID-TIGHT FLEXIBLE CONDUIT CONNECTION

SURFACE MOUNTED CONDUIT; RUN PARALLEL OR PERPENDICULAR TO BUILDING LINES

MISCELLANEOUS

A.F.F.	ABOVE FINISH FLOOR
WP	WEATHERPROOF
U.N.O.	UNLESS NOTED OTHERWISE
C/L	CENTERLINE
C	CONDUIT
GND	GROUND
MT	MOUNT
GFCI	GROUND FAULT CIRCUIT INTERRUPTER

TELECOMMUNICATIONS, CATV, & AUDIO/VISUAL

TELECOMMUNICATIONS OUTLET; INSTALL DOUBLE GANG BACKBOX WITH SINGLE GANG RING AND 1" CONDUIT STUBBED UP ABOVE ACCESSIBLE CEILING W/CABLING; VERIFY LOCATION WITH 14CES/CENM CONSTRUCTION INSPECTOR PRIOR TO ROUGH-IN; MOUNT 18" A.F.F. REFER TO DETAIL.

R/I TELECOMMUNICATIONS OUTLET ROUGH-IN ONLY; INSTALL DOUBLE GANG BACKBOX WITH SINGLE GANG RING AND 1" CONDUIT STUBBED UP ABOVE ACCESSIBLE CEILING W/PULL STRING; VERIFY LOCATION WITH 14CES/CENM CONSTRUCTION INSPECTOR PRIOR TO ROUGH-IN; MOUNT 18" A.F.F. REFER TO DETAIL.

CATV OUTLET; INSTALL DOUBLE GANG BACKBOX WITH SINGLE GANG RING AND 1" CONDUIT STUBBED UP ABOVE ACCESSIBLE CEILING W/CABLING; VERIFY LOCATION WITH 14CES/CENM CONSTRUCTION INSPECTOR PRIOR TO ROUGH-IN; MOUNT 6'-8" A.F.F. REFER TO DETAIL.

FP DISPLAY AUDIO/VISUAL OUTLET ROUGH-IN ONLY; INSTALL DOUBLE GANG BACKBOX WITH SINGLE GANG RING AND 1-1/4" CONDUIT STUBBED UP ABOVE ACCESSIBLE CEILING W/PULL STRING; VERIFY LOCATION WITH 14CES/CENM CONSTRUCTION INSPECTOR PRIOR TO ROUGH-IN; REFER TO DETAIL.

AV AUDIO/VISUAL OUTLET ROUGH-IN ONLY; INSTALL THREE GANG BACKBOX WITH THREE GANG RING AND (3) 1-1/4" CONDUITS STUBBED UP ABOVE ACCESSIBLE CEILING W/PULL STRING; VERIFY LOCATION WITH 14CES/CENM CONSTRUCTION INSPECTOR PRIOR TO ROUGH-IN; REFER TO DETAIL.

INTRUSION DETECTION SYSTEM

(D) DOOR CONTACT ROUGH-IN ONLY FOR GFGI SECURITY SYSTEM

KP KEYPAD ROUGH-IN ONLY FOR GFGI SECURITY SYSTEM

PANELS AND POWER

120/208 VOLT PANELBOARD

277/480 VOLT PANELBOARD

T DRY TYPE TRANSFORMER

(5) MOTOR FURNISHED BY OTHERS AND CONNECTED BY ELECTRICAL CONTRACTOR; '5' INDICATES HORSE POWER RATING

NON-FUSIBLE DISCONNECT SWITCH; XX/YY/ZZ WHERE X INDICATES AMPERAGE, Y INDICATES # OF POLES, AND Z INDICATES NEMA RATING

FUSIBLE DISCONNECT SWITCH; XX/YY/ZZ WHERE X INDICATES AMPERAGE, Y INDICATES # OF POLES, AND Z INDICATES NEMA RATING; FUSE PER MANUFACTURER'S RECOMMENDATIONS

SM MOTOR RATED TOGGLE SWITCH DISCONNECT, 20 AMP SPEC GRADE, SINGLE POLE, RATED TO ONE HORSEPOWER.

FIRE ALARM/MASS NOTIFICATION SYSTEM

F FIRE ALARM SYSTEM MANUAL PULL STATION; MT 48" AFF TO C/L

H FIRE ALARM/MASS NOTIFICATION SYSTEM SIGNAL SPEAKER/CLEAR STROBE MARKED ALERT; MT 80" AFF TO BOTTOM OF LENS

TH MASS NOTIFICATION TEXT SIGN; MT ABOVE DOOR

F S FIRE ALARM/MASS NOTIFICATION SYSTEM SIGNAL SPEAKER/CLEAR STROBE MARKED ALERT; MT FLUSH IN CEILING

S FIRE ALARM/MASS NOTIFICATION SYSTEM SIGNAL SPEAKER; MT FLUSH IN CEILING

F FIRE ALARM/MASS NOTIFICATION SYSTEM SIGNAL CLEAR STROBE MARKED ALERT; PENDANT MOUNT 25' AFF

BH FOAM SYSTEM 400 CANDELA BLUE BEACON; MT. BETWEEN 20'-30' AFF TO C/L. MOUNT A SIGN NEXT TO EACH BEACON. SEE SHEET E-402 FOR SIGN REQUIREMENTS.

FIRE ALARM SYSTEM AUTOMATIC SMOKE DETECTOR; CEILING MOUNTED

D_S FIRE ALARM SYSTEM AUTOMATIC AIR DUCT SMOKE DETECTOR MOUNTED IN SUPPLY AIR DUCT

R NORMALLY CLOSED RELAY IN H.V.A.C CONTROL CIRCUIT TO OPEN UPON ACTUATION OF BUILDING FIRE ALARM SYSTEM TO SHUT DOWN A/C UNIT. CONTACTS RATED 5 AMPS, 120 VOLTS.

TS FIRE ALARM SYSTEM TAMPER SWITCH

FS FIRE ALARM SYSTEM FLOW SWITCH

LOC LOCAL OPERATING CONSOLE

FIRE ALARM/MASS NOTIFICATION NOTE:

THE DESIGN DRAWINGS AND SPECIFICATIONS FOR THE FIRE ALARM MASS NOTIFICATION FOR HANGAR 456 HAVE BEEN DEVELOPED FROM ETL 02-15 EXCEPT AS MODIFIED BY THE CRITERIA CHANGES DOCUMENT PROVIDED BY AFCEC ON JUNE 16, 2015 AS MODIFICATION-01 TO THIS EXISTING DESIGN BUILD CONTRACT.

DAVID M. BAGWELL LICENSE No. 59251 STATE OF FLORIDA PROFESSIONAL ENGINEER
9/6/17

BAGWELL ENGINEERING, INC
216 E. Government St. FL Authorization No. 30167
Pensacola, FL 32502 FL PE No. 59251
Phone: (850) 462-8040 Job Number: 14-096

14TH CIVIL ENGINEER SQ — BEST SERVING THE BEST

Symbol No.	Description	Date	Approved
	REVISIONS		

Designed By: D. COLEMAN
Drawn By: D. COLEMAN
Checked By: D. BAGWELL
Reviewed By: D. BAGWELL
Date: 06 SEPT 2017
File No. -
CADD File Name: -
Solicitation Number: FA8903-17-R-EEPZ 10-1001

COLUMBUS AIR FORCE BASE
HERFERNAN HOLLAND MORGAN
ARCHITECTURE
319 S. ALCANIZ ST. • PENSACOLA, FL 32502
850.433.9799 • AA.C001948 • HHMA.COM

REPAIR MAINTENANCE HANGAR 456

ELECTRICAL LEGEND, GENERAL NOTES

Sheet E-001

ISSUED FOR CONSTRUCTION

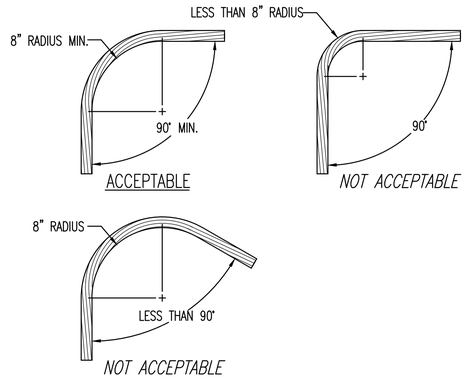

TYP. CABLE BEND REQUIREMENTS

NOT TO SCALE

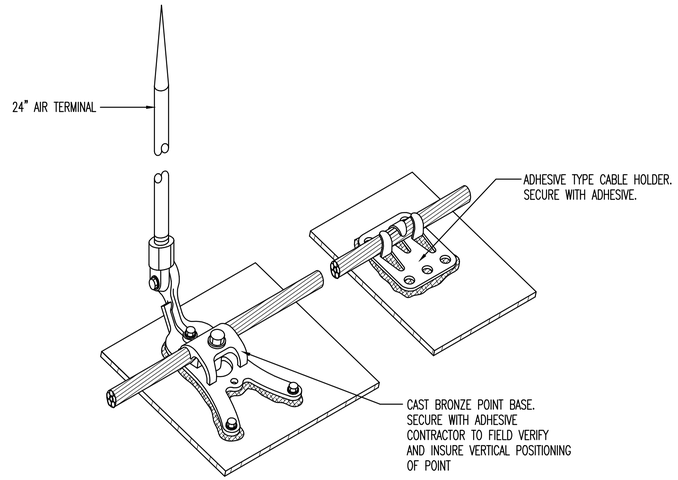

AIR TERMINAL DETAIL

NOT TO SCALE

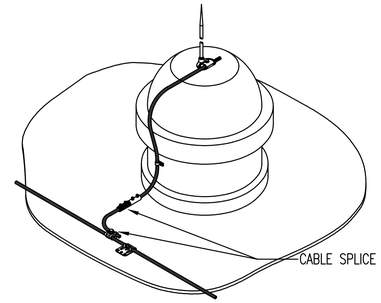

WARNING NOTE

IT IS THE RESPONSIBILITY OF THE LIGHTNING PROTECTION INSTALLER TO COORDINATE WITH THE MECHANICAL EQUIPMENT CONTRACTOR AND FIELD VERIFY APPROVED LOCATIONS PRIOR TO INSTALLATION OF LIGHTNING PROTECTION COMPONENT FASTENERS FOR ANY DRILLING OR PUNCHING OF HOLES WHICH MAY BE REQUIRED FOR INSTALLATION OF FASTENERS, SO AS NOT TO DAMAGE INTERNAL PIPING SYSTEMS, WIRING SYSTEMS OR THE OPERATION/FUNCTION OF THE EQUIPMENT.

SCHEMATIC VIEW
TYP. CABLE ROUTING AT EQUIP.

NOT TO SCALE

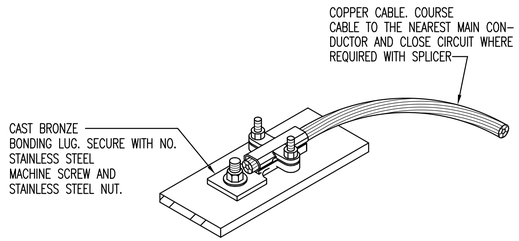

TYP. EQUIP. FRAME BOND

NOT TO SCALE

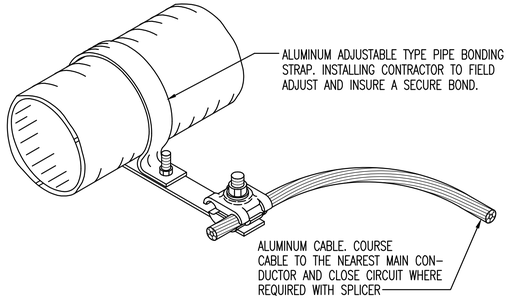

TYP. PIPE BONDING STRAP

NOT TO SCALE

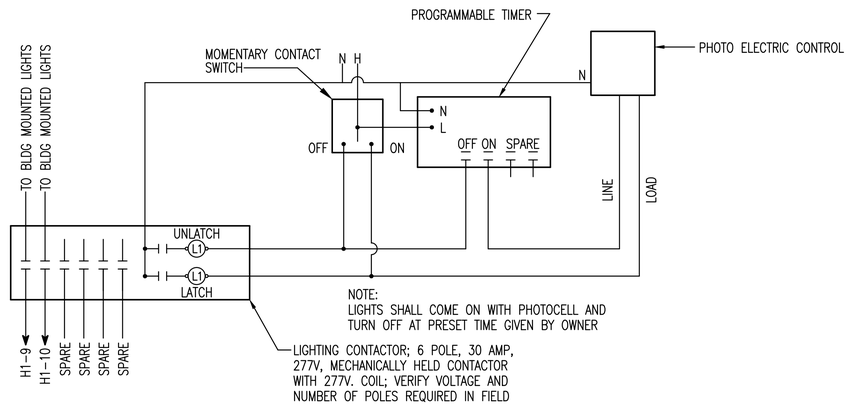

EXTERIOR LIGHTING CONTROL DIAGRAM

NOT TO SCALE

DAVID M. BAGWELL LICENSE No. 59251 STATE OF FLORIDA PROFESSIONAL ENGINEER
2/16/18

BAGWELL ENGINEERING, INC
216 E. Government St. FL Authorization No. 30167
Pensacola, FL 32502 FL PE No. 59251
Phone: (850) 462-8040 Job Number: 14-096

14TH CIVIL ENGINEER SQ
BEST SERVING THE BEST

Symbol No.	Description	Date	Approved

REVISIONS

Designed By: D. COLEMAN
Drawn By: D. COLEMAN
Checked By: D. BAGWELL
Reviewed By: D. BAGWELL

Date: 06 SEPT 2017
File No. .
CADD File Name: .
Solicitation Number: EEPZ 10-1001

COLUMBUS AIR FORCE BASE

HERBERMAN HOLLAND MORGAN
ARCHITECTURE
319 S. ALCANIZ ST • PENSACOLA, FL 32502
850.433.2799 • AA-C001942 • HHMA.COM

REPAIR MAINTENANCE HANGAR 456

ELECTRICAL DETAILS

Sheet
E-002

ISSUED FOR CONSTRUCTION

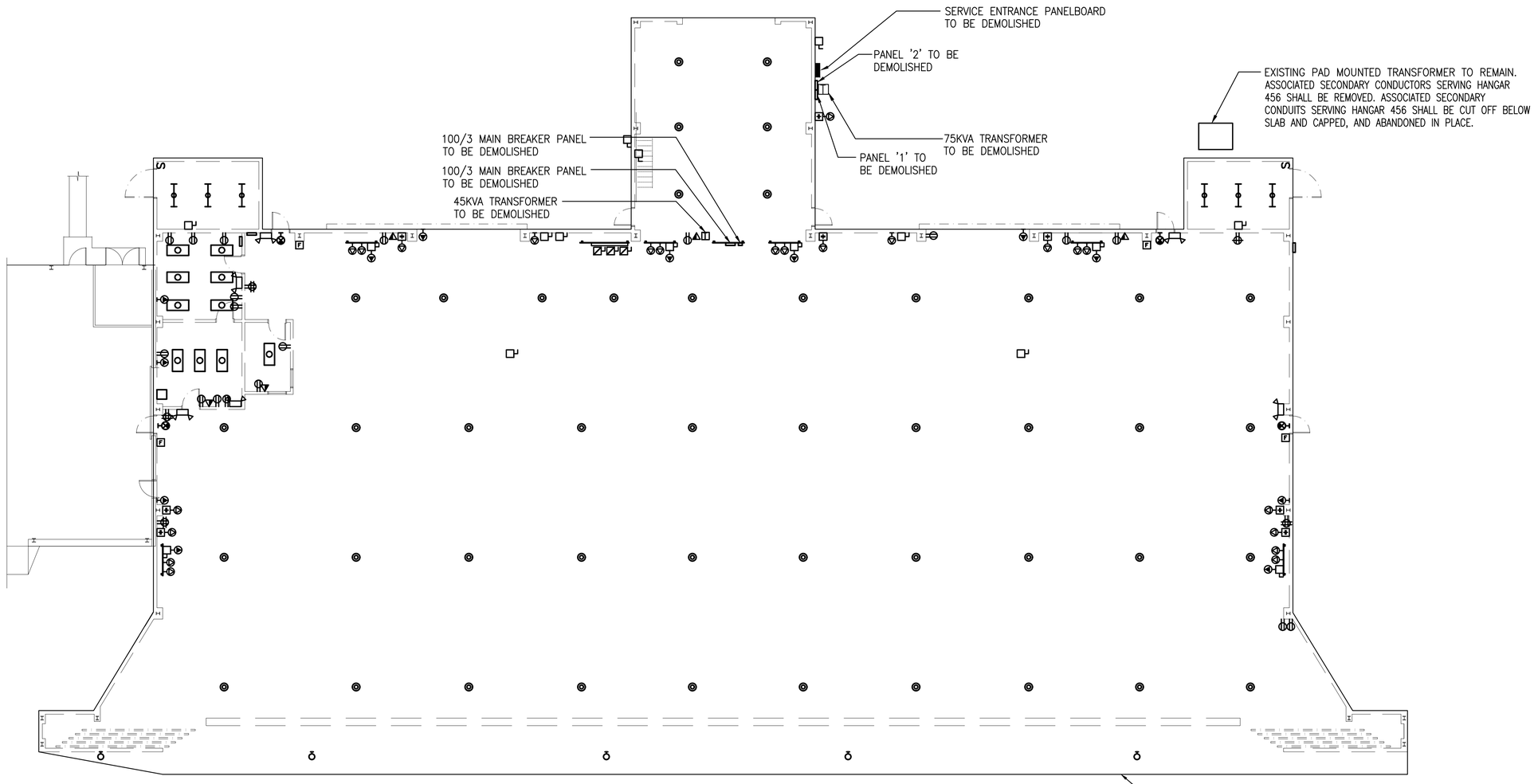

DEMOLITION NOTES

1. ALL EXISTING SYSTEMS AND CONDITIONS SHOWN ON THE PLANS ARE APPROXIMATE. THE EXISTING ELECTRICAL CIRCUITS OF POWER, RECEPTACLES, LIGHTING, ETC. BEING REMOVED MAY NOT BE SHOWN ON THESE DOCUMENTS, BUT ARE TO BE REMOVED AS REQUIRED TO BUILD THIS PROJECT AND TO PERMIT NEW FINISHES, WALLS, ETC. THE CONTRACTOR SHALL FIELD VERIFY ALL CONDITIONS PRIOR TO BEGINNING ANY WORK AND SHALL NOTIFY THE ARCHITECT OF DISCREPANCIES. FAILURE TO DO SO INDICATES THAT THE CONTRACTOR ACCEPTS THE CONDITIONS AS THEY EXIST AND SHALL PERFORM ANY ADDITIONAL WORK NECESSARY TO PERFORM THE WORK AS SHOWN AND SPECIFIED.

2. ALL EXISTING LIGHTING AND DEVICE OUTLETS SHALL BE DEMOLISHED THROUGHOUT THE ENTIRE FACILITY. ALL ASSOCIATED, CONDUIT, CONDUCTORS AND DISCONNECTS SHALL BE COMPLETELY REMOVED BACK TO SERVING PANELBOARD.

3. IF A DEVICE IS BEING REMOVED AND THE CIRCUIT FEEDS OTHER LOADS FROM THE DEVICE, THEN THE WIRING SHALL BE MADE CONTINUOUS TO THE REMAINING LOADS. NO CIRCUIT CONTINUITY SHALL BE LOST.

4 OBTAIN PERMISSION FROM CE CONSTRUCTION INSPECTOR(REPRESENTING CE FIRE DEPARTMENT) BEFORE REMOVING OR MOVING ANTENNA AND CONNECTED ITEMS INCLUDING: TRANSMITTER, CABLING, LIGHTNING PROTECTION. COORDINATE WITH CE CONSTRUCTION INSPECTOR PHYSICAL AND CHRONOLOGICAL REMOVAL AND REINSTALLATION OF THESE ITEMS.

N
PLAN NORTH
TRUE NORTH

ELECTRICAL DECONSTRUCTION PLAN

SCALE: 3/32" = 1'-0"

DAVID M. BAGWELL LICENSE No. 59251 STATE OF FLORIDA PROFESSIONAL ENGINEER 9/6/17

BAGWELL ENGINEERING, INC
216 E. Government St. FL Authorization No. 30167
Pensacola, FL 32502 FL PE No. 59251
Phone: (850) 462-8040 Job Number: 14-096

14TH CIVIL ENGINEER SQ
BEST SERVING THE BEST

Symbol No.	Description	Date	Approved
	REVISIONS		

Designed By: D. COLEMAN
Drawn By: D. COLEMAN
Checked By: D. BAGWELL
Reviewed By: D. BAGWELL
Date: 06 SEPT 2017
File No. .
CADD File Name: .
Solicitation Number: EEPZ 10-1001

HETTENAN HOLLAND MORGAN
ARCHITECTURE
310 S. ALCANIZ ST. • PENSACOLA, FL 32502
850.433.2799 • AAC001942 • HHMA.COM

COLUMBUS AIR FORCE BASE

REPAIR MAINTENANCE HANGAR 456

ELECTRICAL DECONSTRUCTION PLAN

ISSUED FOR CONSTRUCTION

Sheet
E-100

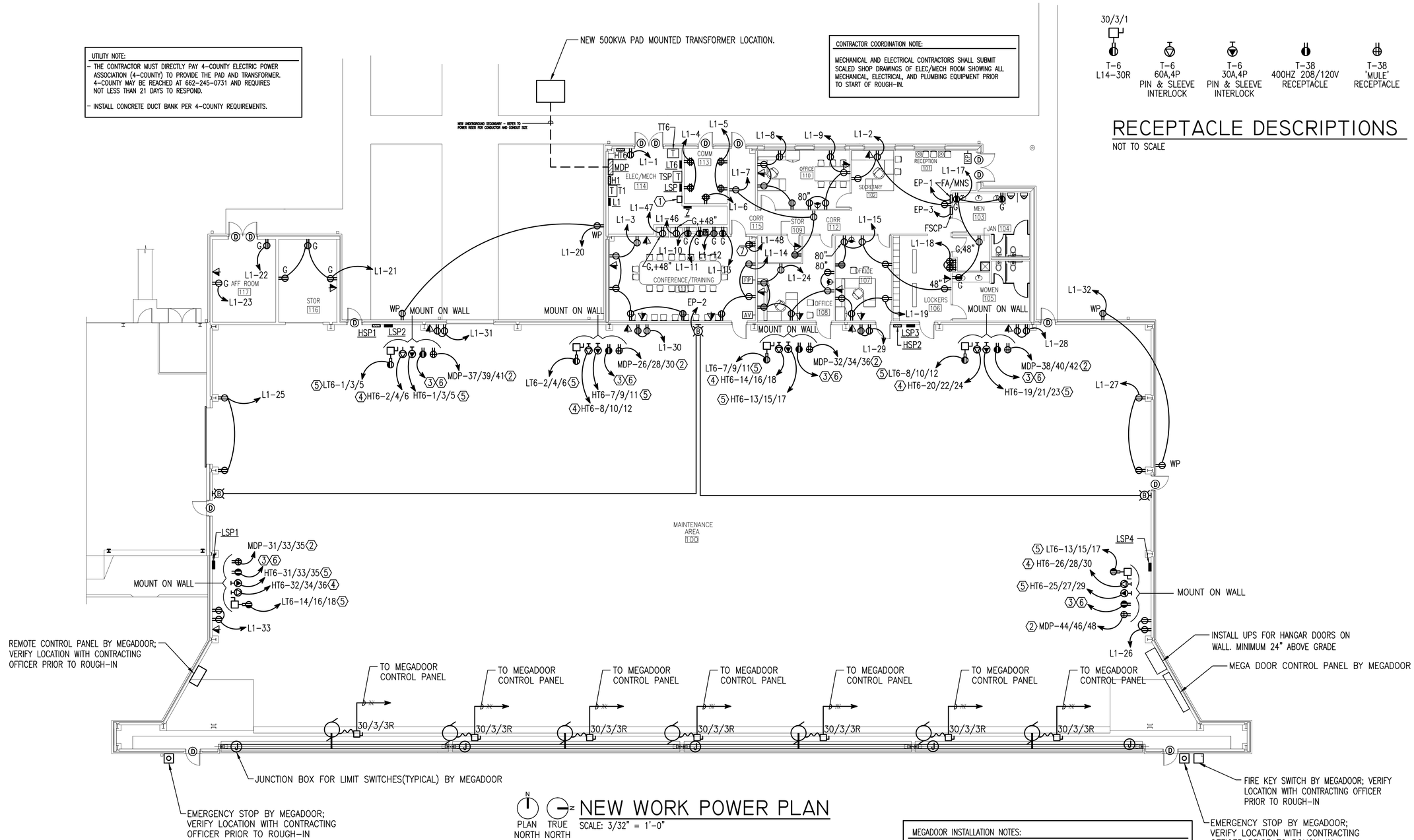

UTILITY NOTE:

- THE CONTRACTOR MUST DIRECTLY PAY 4-COUNTY ELECTRIC POWER ASSOCIATION (4-COUNTY) TO PROVIDE THE PAD AND TRANSFORMER. 4-COUNTY MAY BE REACHED AT 662-245-0731 AND REQUIRES NOT LESS THAN 21 DAYS TO RESPOND.
- INSTALL CONCRETE DUCT BANK PER 4-COUNTY REQUIREMENTS.

CONTRACTOR COORDINATION NOTE:

MECHANICAL AND ELECTRICAL CONTRACTORS SHALL SUBMIT SCALED SHOP DRAWINGS OF ELEC/MECH ROOM SHOWING ALL MECHANICAL, ELECTRICAL, AND PLUMBING EQUIPMENT PRIOR TO START OF ROUGH-IN.

30/3/1

T-6 L14-30R	T-6 60A,4P PIN & SLEEVE INTERLOCK	T-6 30A,4P PIN & SLEEVE INTERLOCK	T-38 400HZ 208/120V RECEPTACLE	T-38 'MULE' RECEPTACLE

RECEPTACLE DESCRIPTIONS

NOT TO SCALE

KEYNOTES:

1. MINI POWER CENTER 'EP' WITH INTEGRATED TRANSFORMER AND 30A LOADCENTER.
2. 4#3/0, 1#6 GND IN 2 1/2"C
3. 4#1, 1#8 GND IN 2" ALUMINUM CONDUIT
4. 4#4, 1#10 GND IN 1 1/4"C
5. 4#10, 1#10 GND IN 3/4"C
6. INSTALL TO 400HZ PANEL AND CONNECT TO NEW 100 AMP 3 POLE BREAKER.
7. GFCI RECEPTACLE, COORDINATE MOUNTING HEIGHT WITH EQUIPMENT PRIOR TO ROUGH-IN.

PLAN NORTH / TRUE NORTH

NEW WORK POWER PLAN

SCALE: 3/32" = 1'-0"

HANGAR BAY INSTALLATION NOTES:

- ALL NEW DEVICES AND CONDUIT SHALL BE INSTALLED A MINIMUM OF 18" ABOVE FINISHED FLOOR WITHIN THE HANGAR BAY AREA.
- ALL NEW FIRE ALARM/MASS NOTIFICATION CONDUIT SHALL HAVE WATERTIGHT CONDUIT/CONNECTIONS AND NEMA 4 JUNCTION BOXES, BACK BOXES, AND ENCLOSURES. INITIATING DEVICES SHALL HAVE CONDUIT ENTER THE BOTTOM OF THE BACKBOX, AND THE LOW POINT OF THE CONDUIT SHALL BE PROVIDED WITH A DRAIN. WHERE THE CONDUIT IS IN A HAZARDOUSLY CLASSIFIED AREA, ADDITIONALLY PROVIDE BREATHERS IN ISOLATED PORTIONS OF THE CONDUIT (E.G. SEALED OFF FROM THE REMAINING CONDUIT SYSTEM). DRAINS AND BREATHERS SHALL BE RATED FOR THE HAZARDOUS CLASSIFICATION IN WHICH THEY ARE INSTALLED, BUT SHALL NOT BE LESS THAN NEMA 4.

MEGADOOR INSTALLATION NOTES:

- MEGADOOR POWER AND CONTROLS FOR DOORS SHALL BE INSTALLED BY MEGADOOR.
- ELECTRICAL CONTRACTOR SHALL COORDINATE CONDUIT AND WIRING WITH MEGADOOR SHOP DRAWINGS PRIOR TO ROUGH IN.

ANTENNA INSTALLATION NOTE:

- COORDINATE LOCATION, ELECTRICAL, AND COMMUNICATIONS REQUIREMENTS WITH GOVERNMENT. INSTALL POWER AS REQUIRED. ANTENNA AND SUPPORTING EQUIPMENT SHALL BE PROVIDED AND INSTALLED BY GOVERNMENT.
- OBTAIN PERMISSION FROM CE CONSTRUCTION INSPECTOR(REPRESENTING CE FIRE DEPARTMENT) BEFORE REMOVING OR MOVING ANTENNA AND CONNECTED ITEMS INCLUDING: TRANSMITTER, CABLING, LIGHTNING PROTECTION. COORDINATE WITH CE CONSTRUCTION INSPECTOR PHYSICAL AND CHRONOLOGICAL REMOVAL AND REINSTALLATION OF THESE ITEMS.

DAVID M. BAGWELL LICENSE No. 59251 STATE OF FLORIDA PROFESSIONAL ENGINEER 9/6/17

BAGWELL ENGINEERING, INC
216 E. Government St. FL Authorization No. 30167
Pensacola, FL 32502 FL PE No. 59251
Phone: (850) 462-8040 Job Number: 14-096

14TH CIVIL ENGINEER SQ — BEST SERVING THE BEST

Symbol No.	Description	Date	Approved

REVISIONS

Designed By: D. COLEMAN
Drawn By: D. COLEMAN
Checked By: D. BAGWELL
Reviewed By: D. BAGWELL
Date: 06 SEPT 2017
File No. -
CADD File Name: -
Solicitation Number: FEPZ 10-1001

COLUMBUS AIR FORCE BASE

HEFFERNAN HOLLAND MORGAN
ARCHITECTURE
310 S. ALCANIZ ST. • PENSACOLA, FL 32502
850.433.2799 • AA0001942 • HHMA.COM

REPAIR MAINTENANCE HANGAR 456

NEW WORK POWER PLAN

Sheet E-200

ISSUED FOR CONSTRUCTION

HANGAR BAY INSTALLATION NOTES:

- ALL NEW DEVICES AND CONDUIT SHALL BE INSTALLED A MINIMUM OF 18" ABOVE FINISHED FLOOR WITHIN THE HANGAR BAY AREA.
- ALL NEW FIRE ALARM/MASS NOTIFICATION/FOAM SUPPRESSION CONDUIT SHALL HAVE WATERTIGHT CONDUIT/CONNECTIONS AND NEMA 4 JUNCTION BOXES, BACK BOXES, AND ENCLOSURES. INITIATING DEVICES SHALL HAVE CONDUIT ENTER THE BOTTOM OF THE BACKBOX, AND THE LOW POINT OF THE CONDUIT SHALL BE PROVIDED WITH A DRAIN. WHERE THE CONDUIT IS IN A HAZARDOUSLY CLASSIFIED AREA, ADDITIONALLY PROVIDE BREATHERS IN ISOLATED PORTIONS OF THE CONDUIT (E.G. SEALED OFF FROM THE REMAINING CONDUIT SYSTEM). DRAINS AND BREATHERS SHALL BE RATED FOR THE HAZARDOUS CLASSIFICATION IN WHICH THEY ARE INSTALLED, BUT SHALL NOT BE LESS THAN NEMA 4.
- MANUAL FIRE ALARM PULL STATIONS INSTALLED AT AN EXIT DOOR SHALL BE ON THE OPPOSITE OF THE DOORWAY FROM MANUAL STOP STATIONS AND FOAM RELEASING STATIONS.

FOAM SUPPRESSION NOTES:

- REFER TO "F" SHEETS FOR FOAM SUPPRESSION DEVICES.
- PROVIDE ALL NECESSARY CONDUIT, FIBER OPTIC CABLES, ADAPTORS, PROGRAMMING AND ACCESSORIES TO SUPPORT FIBER OPTIC CONNECTION TO FOAM SUPPRESSION PANEL.

INSTALL NEW 12 STRAND MULTI-MODE FIBER OPTIC CABLE IN 2" SCHEDULE 80 PVC CONDUIT FROM THE NEW FOAM SUPPRESSION CONTROL PANEL IN BLDG 456 TO THE FIRE PUMP CONTROLLERS IN THE NEW PUMP HOUSE. 2" CONDUIT SHALL BE A MINIMUM OF 24" APART FROM FIRE MAIN WHEN ROUTING IN SAME TRENCH. INSTALL A 'COMM' HANDHOLE AT THE APPROXIMATE HALFWAY POINT OF THE INSTALL.

TO PUMP HOUSE

FIBER JUNCTION BOX

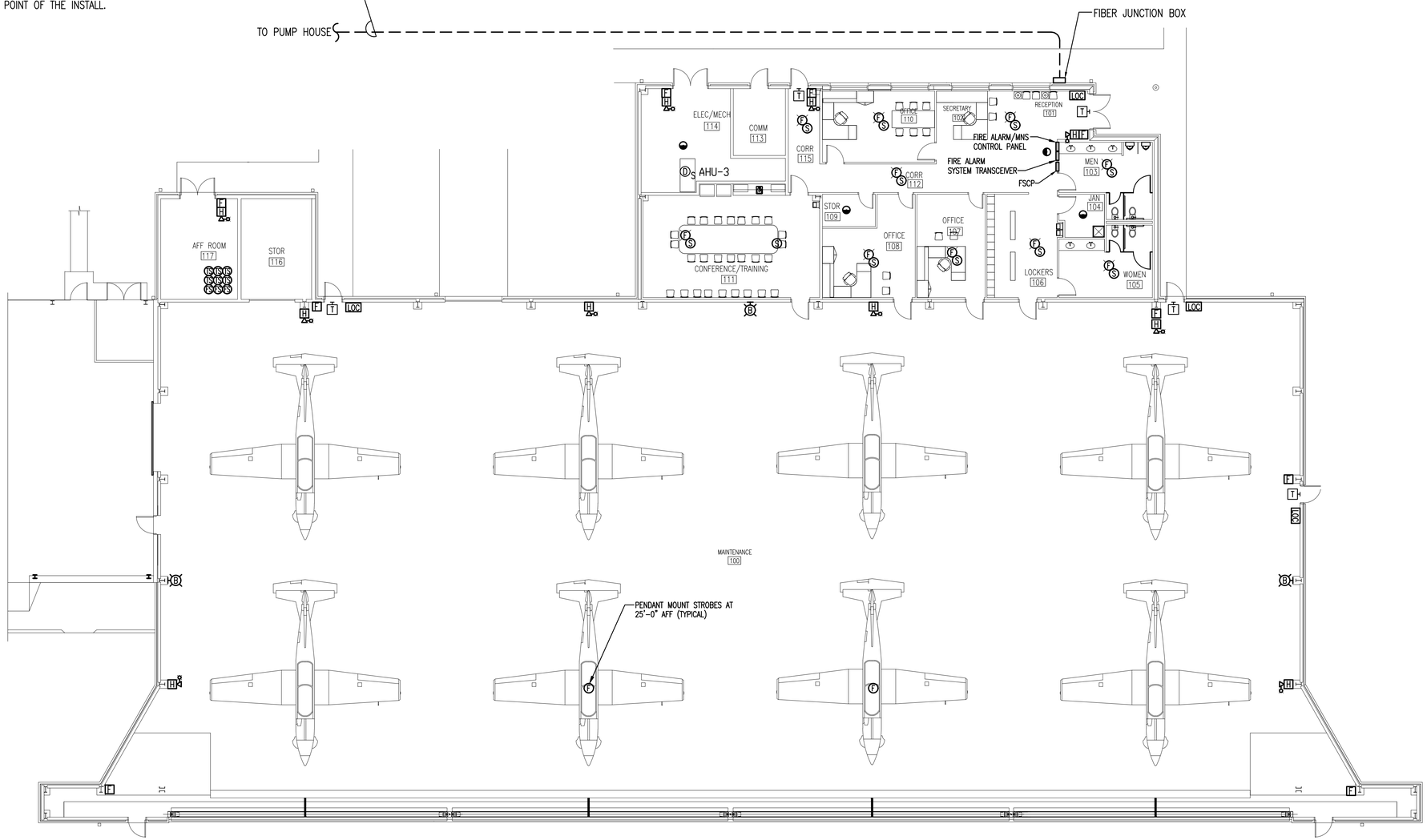

N

PLAN NORTH / TRUE NORTH

NEW WORK SYSTEMS PLAN

SCALE: 3/32" = 1'-0"

DAVID M. BAGWELL LICENSE No. 59251 STATE OF FLORIDA PROFESSIONAL ENGINEER
3/6/18

BAGWELL ENGINEERING, INC
216 E. Government St. Pensacola, FL 32502
Phone: (850) 462-8040
FL Authorization No. 30167
FL PE No. 59251
Job Number: 14-096

14TH CIVIL ENGINEER SQ
BEST SERVING THE BEST

Symbol No.	Description	Date	Approved

REVISIONS

Designed By: D. COLEMAN
Drawn By: D. COLEMAN
Checked By: D. BAGWELL
Reviewed By: D. BAGWELL
Date: 06 SEPT 2017
File No. -
CADD File Name: -
Solicitation Number: FEPZ 10-1001

COLUMBUS AIR FORCE BASE

HEFFERNAN HOLLAND MORGAN
ARCHITECTURE
319 S. ALCANIZ ST. • PENSACOLA, FL 32502
850.433.9799 • AA.C001942 • HHMA.COM

REPAIR MAINTENANCE HANGAR 456

NEW WORK SYSTEMS PLAN

Sheet E-201

ISSUED FOR CONSTRUCTION

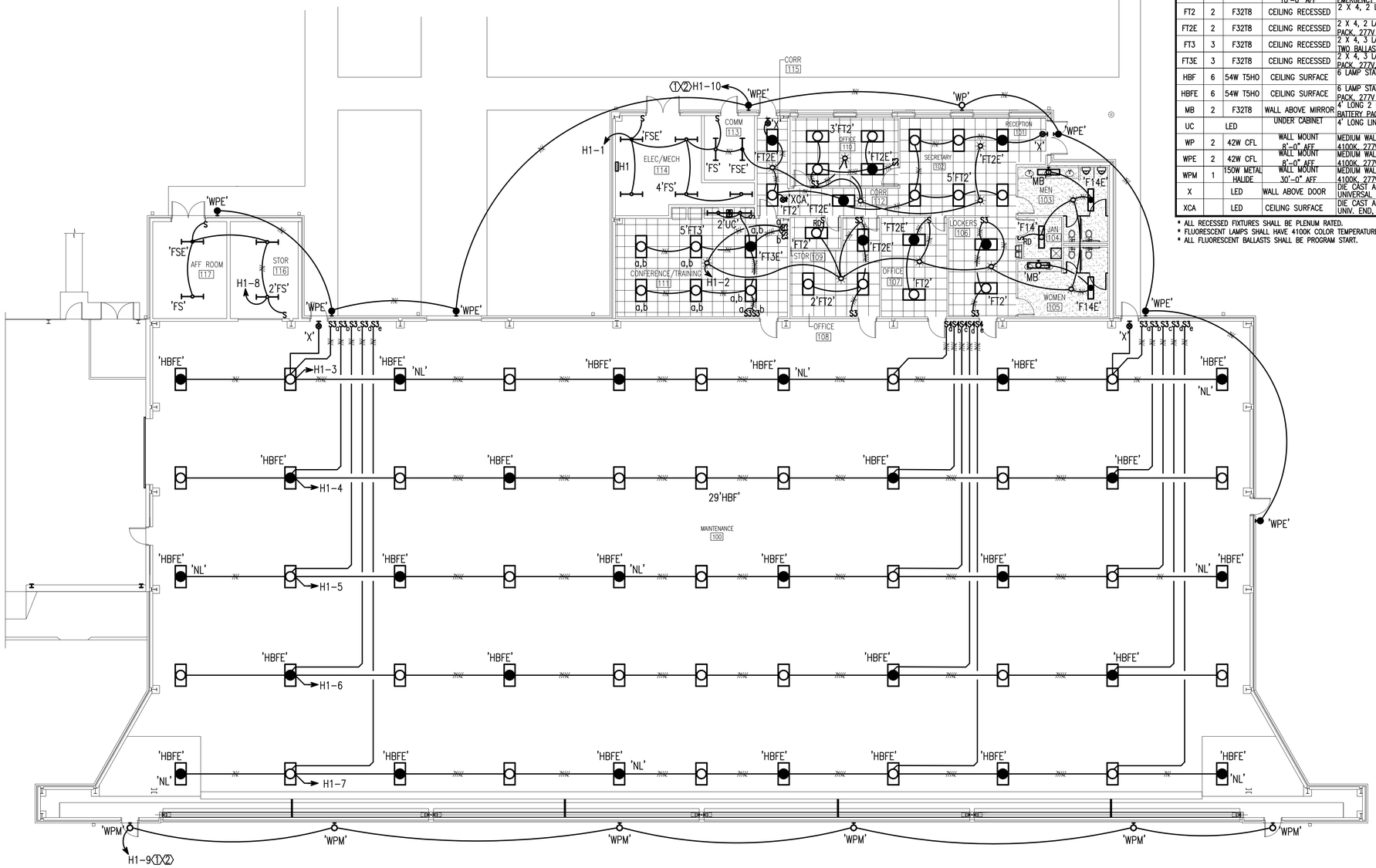

LIGHTING FIXTURE SCHEDULE				
MARK	LAMPS No.	LAMPS TYPE	MOUNTING	REMARKS
F14	2	F32T8	CEILING RECESSED	1 X 4, 2 LAMP STATIC RECESSED LENSED TROFFER, 4100K, 277V
F14E	2	F32T8	CEILING RECESSED	1 X 4, 2 LAMP STATIC RECESSED LENSED TROFFER, 4100K, 1400 LUMEN EMERGENCY BATTERY PACK, 277V
FS	2	F32T8	PENDANT MOUNT 10'-0" AFF	4' LONG 2 LAMP FLUORESCENT FIXTURE,4100K, 10% UPLIGHT, WIRE GUARD, BATTERY PACK, 277V
FSE	2	F32T8	PENDANT MOUNT 10'-0" AFF	4' LONG 2 LAMP FLUORESCENT FIXTURE,4100K, 10% UPLIGHT, WIRE GUARD, 1400 LUMEN EMERGENCY BATTERY PACK, 277V
FT2	2	F32T8	CEILING RECESSED	2 X 4, 2 LAMP STATIC RECESSED LENSED TROFFER, 4100K, 277V
FT2E	2	F32T8	CEILING RECESSED	2 X 4, 2 LAMP STATIC RECESSED LENSED TROFFER, 4100K,1400 LUMEN EMERGENCY BATTERY PACK, 277V
FT3	3	F32T8	CEILING RECESSED	2 X 4, 3 LAMP STATIC RECESSED LENSED TROFFER, 4100K, 277V, PROVIDE WITH TWO BALLASTS FOR MULTI-LEVEL SWITCHING
FT3E	3	F32T8	CEILING RECESSED	2 X 4, 3 LAMP STATIC RECESSED LENSED TROFFER, 4100K,1400 LUMEN EMERGENCY BATTERY PACK, 277V, PROVIDE WITH TWO BALLASTS FOR MULTI-LEVEL SWITCHING
HBF	6	54W T5HO	CEILING SURFACE	6 LAMP STATIC HIGH BAY FLUORESCENT FIXTURE, 4100K, 277V
HBFE	6	54W T5HO	CEILING SURFACE	6 LAMP STATIC HIGH BAY FLUORESCENT FIXTURE, 4100K,1400 LUMEN EMERGENCY BATTERY PACK, 277V
MB	2	F32T8	WALL ABOVE MIRROR	4' LONG 2 LAMP WALL MOUNTED FLUORESCENT FIXTURE, 4100K,1400 LUMEN EMERGENCY BATTERY PACK, 277V
UC		LED	UNDER CABINET	4' LONG LINEAR LED UNDER CABINET FIXTURE, 4100K, 277V, INTEGRAL LED DRIVER
WP	2	42W CFL	WALL MOUNT 8'-0" AFF	MEDIUM WALL PACK, DIE-CAST ALUMINUM COMPACT FLUORESCENT FIXTURE, UL WET LISTED, 4100K, 277V
WPE	2	42W CFL	WALL MOUNT 8'-0" AFF	MEDIUM WALL PACK, DIE-CAST ALUMINUM COMPACT FLUORESCENT FIXTURE, UL WET LISTED, 4100K, 277V
WPM	1	150W METAL HALIDE	WALL MOUNT 30'-0" AFF	MEDIUM WALL PACK, DIE-CAST ALUMINUM COMPACT FLUORESCENT FIXTURE, UL WET LISTED, 4100K, 277V
X		LED	WALL ABOVE DOOR	DIE CAST ALUMINUM EXIT SIGN WITH LED LAMPS, SELF TEST/SELF DIAGNOSTICS, UNIVERSAL END, CEILING OR WALL MOUNT, 277V
XCA		LED	CEILING SURFACE	DIE CAST ALUMINUM EXIT SIGN WITH LED LAMPS, SELF TEST/SELF DIAG., UNIV. END, CEILING OR WALL MOUNT, DIRECTIONAL ARROWS AS INDICATED, 277V

* ALL RECESSED FIXTURES SHALL BE PLENUM RATED.
* FLUORESCENT LAMPS SHALL HAVE 4100K COLOR TEMPERATURE AND A MINIMUM 80 CRI RATING.
* ALL FLUORESCENT BALLASTS SHALL BE PROGRAM START.

KEYNOTES:

⟨1⟩ INSTALL 2#10,1#10 GND IN 1/2"C

⟨2⟩ ROUTE CIRCUIT THROUGH LIGHTING CONTACTOR. SEE LIGHTING CONTACTOR DETAIL SHEET E-002.

PLAN NORTH / TRUE NORTH

NEW WORK LIGHTING PLAN

SCALE: 3/32" = 1'-0"

14TH CIVIL ENGINEER SQ
BEST SERVING THE BEST

REVISIONS			
Symbol No.	Description	Date	Approved

Designed By:	D. COLEMAN
Drawn By:	D. COLEMAN
Checked By:	D. BAGWELL
Reviewed By:	D. BAGWELL
Date:	06 SEPT 2017
File No.	-
CADD File Name:	-
Solicitation Number:	EEPZ 10-1001

COLUMBUS AIR FORCE BASE

HERRNAN HOLLAND MORGAN
ARCHITECTURE
319 S. ALCANIZ ST. • PENSACOLA, FL 32502
850.433.2799 • AAC001942 • HHMA.COM

REPAIR MAINTENANCE HANGAR 456

NEW WORK LIGHTING PLAN

Sheet
E-202

ISSUED FOR CONSTRUCTION

DAVID M. BAGWELL LICENSE No. 59251 STATE OF FLORIDA PROFESSIONAL ENGINEER
9/6/17

BAGWELL ENGINEERING, INC
216 E. Government St. FL Authorization No. 30167
Pensacola, FL 32502 FL PE No. 59251
Phone: (850) 462-8040 Job Number: 14-096

GENERAL NOTES:

- LIGHTNING PROTECTION SYSTEM SHALL NOT DEGRADE THE ROOFING SYSTEM INTEGRITY
- TO THE EXTENT PRACTICAL, THE BUILDING STRUCTURAL STEEL SHALL BE INTERCONNECTED AND USED AS DOWN CONDUCTORS ACCORDING TO NFPA 780
- FOUR GROUND TEST WELLS SHALL BE INSTALLED AROUND THE FACILITY
- LIGHTNING PROTECTION SYSTEM AND BUILDING GROUND SYSTEM TO BE INSPECTED AND CERTIFIED BY LPI-IP PROGRAM TO UL 96A – NFPA 780 AND LPI-175 CURRENT CODES. INCLUDING DRAWING REVIEW AND THIRD PARTY INSPECTION BY LPI ELECTRICAL ENGINEER FOR MASTER CERTIFICATION PER UFC 3-575-01.

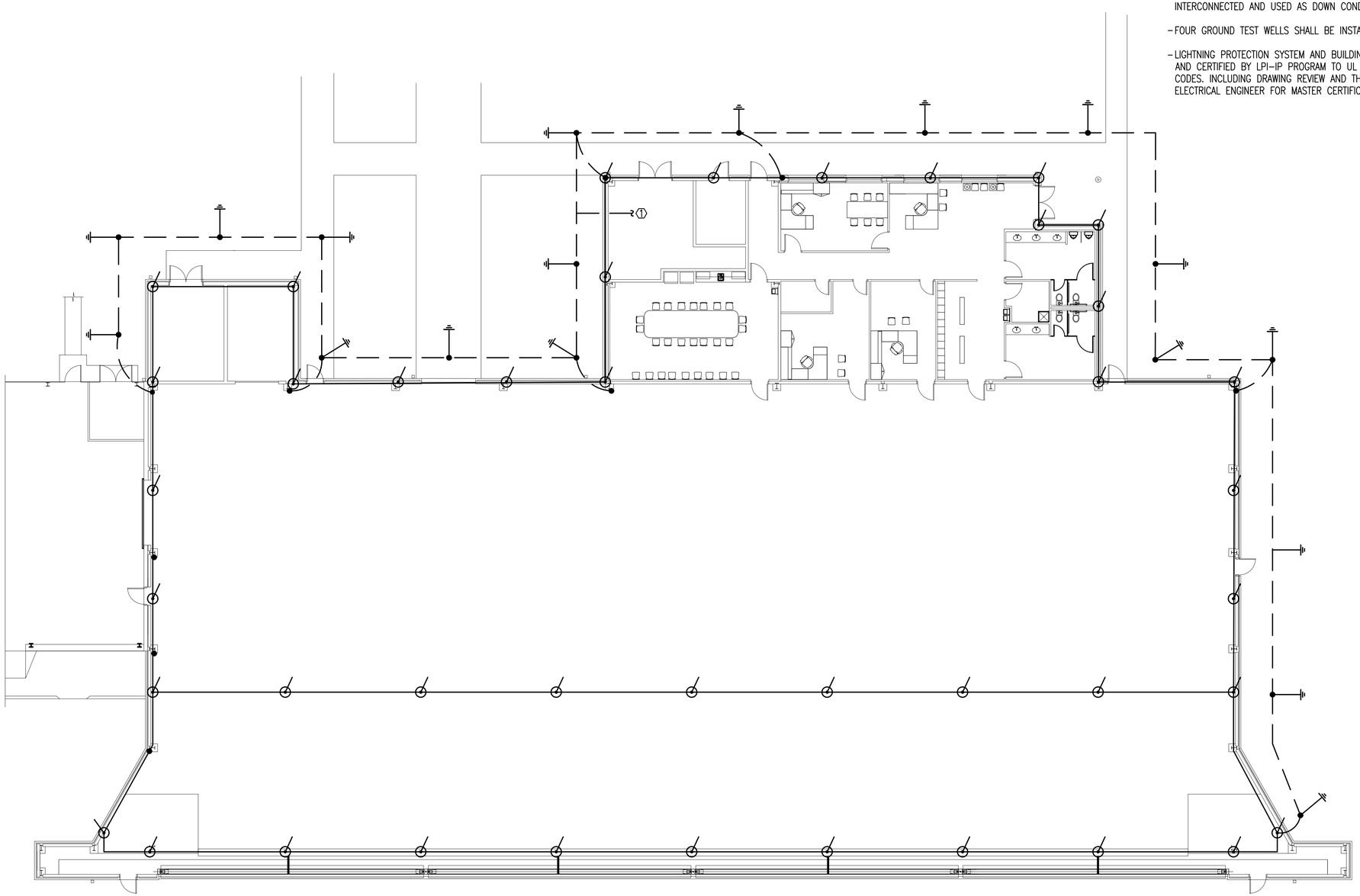

LIGHTNING PROTECTION SYSTEM LEGEND

- ROOF MOUNTED LIGHTNING PROTECTION SYSTEM AIR TERMINAL
- 3/4" X 10' COPPER-CLAD STEEL GROUND ROD
- LIGHTNING PROTECTION SYSTEM ROOF CONDUCTOR
- — —2/0 COPPER COUTERPOISE MINIMUM 30" BELOW GRADE

PLAN NORTH / TRUE NORTH

NEW WORK LIGHTNING PROTECTION PLAN

SCALE: 3/32" = 1'-0"

KEYNOTES:

① CONNECT TO GROUND BUS BAR WITHIN MAIN ELECTRICAL ROOM.

DAVID M. BAGWELL LICENSE No. 59251 STATE OF FLORIDA PROFESSIONAL ENGINEER 9/6/17

BAGWELL ENGINEERING, INC
216 E. Government St. FL Authorization No. 30167
Pensacola, FL 32502 FL PE No. 59251
Phone: (850) 462-8040 Job Number: 14-096

14TH CIVIL ENGINEER SQ — BEST SERVING THE BEST

Symbol No.	Description	Date	Approved
	REVISIONS		

Designed By: D. COLEMAN
Drawn By: D. COLEMAN
Checked By: D. BAGWELL
Reviewed By: D. BAGWELL
Date: 06 SEPT 2017
File No. .
CADD File Name: .
Solicitation Number: FA8903-17-R-EEPZ 10-1001

COLUMBUS AIR FORCE BASE

HEFFERNAN HOLLAND MORGAN
ARCHITECTURE
319 S. ALCANIZ ST. • PENSACOLA, FL 32502
850.433.2799 • AAC001942 • HHMA.COM

REPAIR MAINTENANCE HANGAR 456

NEW WORK LIGHTNING PROTECTION PLAN

Sheet
E-203

ISSUED FOR CONSTRUCTION

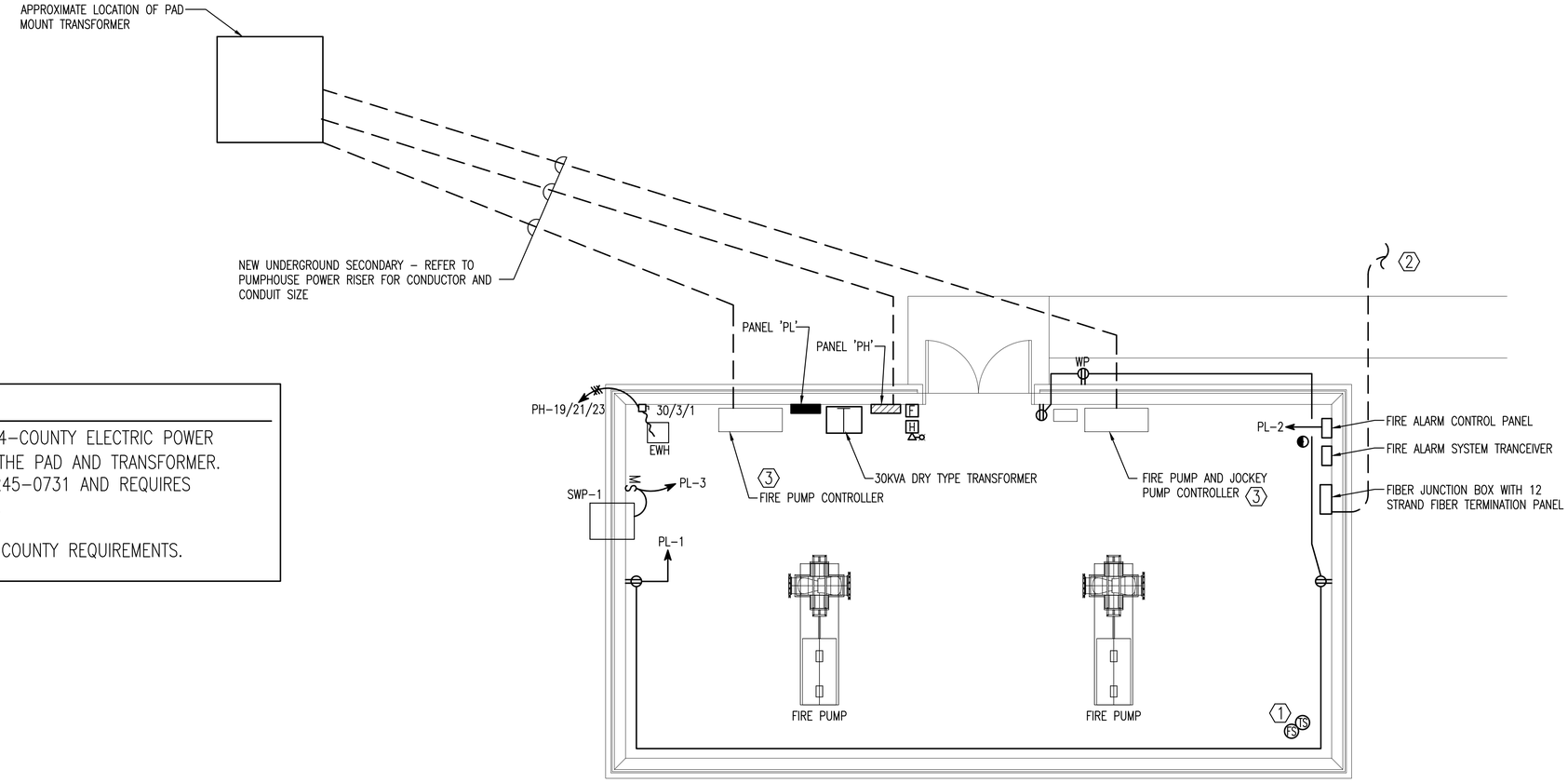

UTILITY NOTE:

- THE CONTRACTOR MUST DIRECTLY PAY 4-COUNTY ELECTRIC POWER ASSOCIATION (4-COUNTY) TO PROVIDE THE PAD AND TRANSFORMER. 4-COUNTY MAY BE REACHED AT 662-245-0731 AND REQUIRES NOT LESS THAN 21 DAYS TO RESPOND.
- INSTALL CONCRETE DUCT BANK PER 4-COUNTY REQUIREMENTS.

NEW WORK POWER AND SIGNAL PLAN

SCALE: 1/4" = 1'-0"

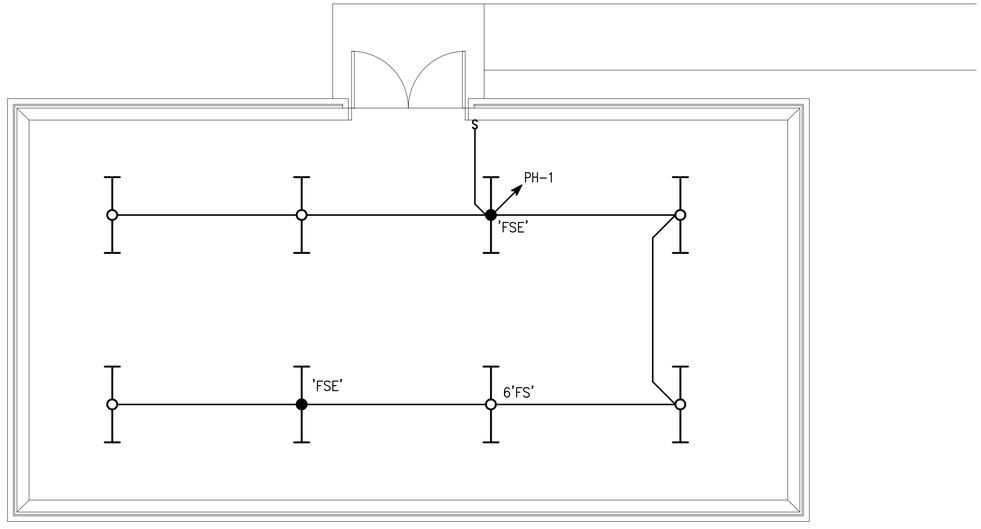

NEW WORK LIGHTING PLAN

SCALE: 1/4" = 1'-0"

KEYNOTES:

1. PROVIDE FLOW AND TAMPER MONITOR AS REQUIRED BY THE FIRE PROTECTION SPRINKLER CONTRACTOR.
2. INSTALL NEW 12 STRAND MULTI-MODE FIBER OPTIC CABLE IN 2" SCHEDULE 80 PVC CONDUIT FROM THE NEW FOAM SUPPRESSION CONTROL PANEL IN BLDG 456 TO THE FIRE PUMP CONTROLLERS. 2" CONDUIT SHALL BE A MINIMUM OF 24" APART FROM FIRE MAIN WHEN ROUTING IN SAME TRENCH.
3. FURNISH AND INSTALL NEW FIBER MODULE FOR COMMUNICATIONS TO FIRE PUMP CONTROLLER FOR REMOTE START. PROVIDE ALL NECESSARY CONDUIT, FIBER OPTIC CABLES, ADAPTORS, PROGRAMMING AND ACCESSORIES TO SUPPORT FIBER OPTIC CONNECTION TO BLDG 456 FOAM SUPPRESSION PANEL.

DAVID M. BAGWELL LICENSE No. 59251 STATE OF FLORIDA PROFESSIONAL ENGINEER 3/16/17

BAGWELL ENGINEERING, INC
216 E. Government St. FL Authorization No. 30167
Pensacola, FL 32502 FL PE No. 59251
Phone: (850) 462-8040 Job Number: 14-096

14TH CIVIL ENGINEER SQ
BEST SERVING THE BEST

Symbol No.	Description	Date	Approved

REVISIONS

Designed By: D. COLEMAN
Drawn By: D. COLEMAN
Checked By: D. BAGWELL
Reviewed By: D. BAGWELL
Date: 06 SEPT 2017
File No. .
CADD File Name: .
Solicitation Number: FEPZ 10-1001

COLUMBUS AIR FORCE BASE

HEFFERNAN HOLLAND MORGAN
ARCHITECTURE
312 S. ALCANIZ ST. • PENSACOLA, FL 32502
850.433.2799 • AA0001948 • HHMA.COM

REPAIR MAINTENANCE HANGAR 456

PUMPHOUSE NEW WORK PLANS

Sheet
E-204

ISSUED FOR CONSTRUCTION

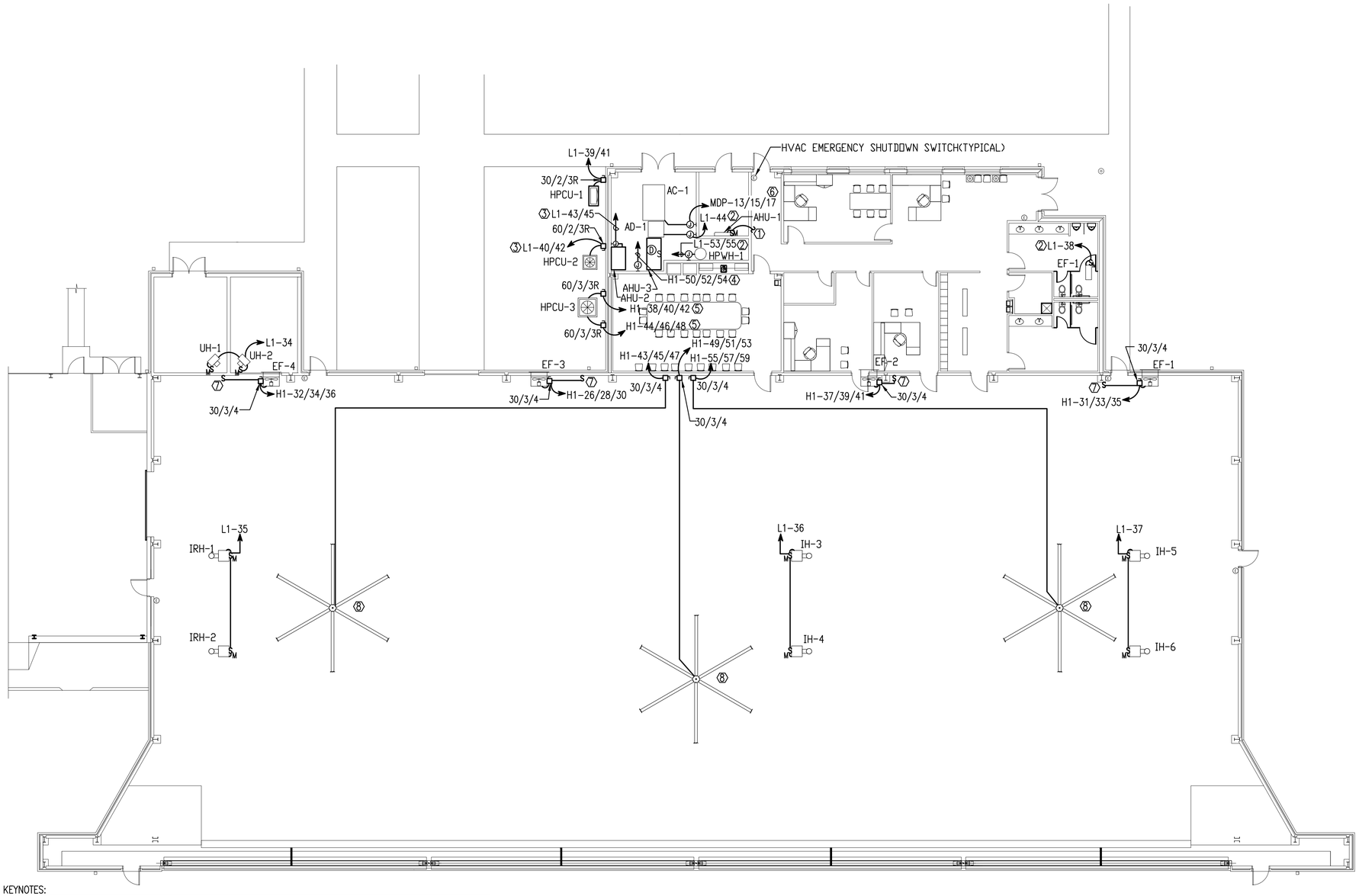

KEYNOTES:

① INDOOR UNIT POWERED VIA OUTDOOR UNIT. INSTALL 1/2" CONDUIT WITH APPROPRIATE CONDUCTORS PER MANUFACTURER'S RECOMMENDATION.

② 2#10,1#10 GND IN 3/4"C

③ 2#8,1#10 GND IN 3/4"C

④ 3#10,1#10 GND IN 3/4"C

⑤ 3#6,1#10 GND IN 1"C

⑥ 3#8,1#10 GND IN 3/4"C

⑦ WALL SWITCH; PROVIDED BY MECHANICAL CONTRACTOR

⑧ INSTALL THE FAN SPEED CONTROL ON WALL AT LOCATION DETERMINED BY USER. INSTALL LOW VOLTAGE CABLING IN 3/4" CONDUIT AS REQUIRED BY THE MANUFACTURER. ADDITIONALLY, INSTALL LOW VOLTAGE WIRE IN 3/4" CONDUIT TO INTERFACE WITH THE FIRE ALARM SYSTEM. THE FAN SHALL SHUTDOWN UPON ACTIVATION OF THE FIRE ALARM SYSTEM.

N PLAN NORTH

TRUE NORTH

NEW WORK MECHANICAL POWER PLAN

SCALE: 3/32" = 1'-0"

DAVID M. BAGWELL LICENSE No. 59251 STATE OF FLORIDA PROFESSIONAL ENGINEER

3/16/18

BAGWELL ENGINEERING, INC
216 E. Government St. Pensacola, FL 32502 Phone: (850) 462-8040
FL Authorization No. 30167 FL PE No. 59251 Job Number: 14-096

14TH CIVIL ENGINEER SQ
BEST SERVING THE BEST

Symbol No.	Description	Date	Approved
	REVISIONS		

Designed By: D. COLEMAN
Drawn By: D. COLEMAN
Checked By: D. BAGWELL
Reviewed By: D. BAGWELL
Date: 06 SEPT 2017
File No. -
CADD File Name: -
Solicitation Number: FEPZ 10-1001

COLUMBUS AIR FORCE BASE

HEFFERNAN HOLLAND MORGAN
ARCHITECTURE
312 S. ALCANIZ ST. • PENSACOLA, FL 32502
850.433.9799 • AA-C001942 • HHMA.COM

REPAIR MAINTENANCE HANGAR 456

NEW WORK MECHANICAL POWER PLAN

Sheet
E-300

ISSUED FOR CONSTRUCTION

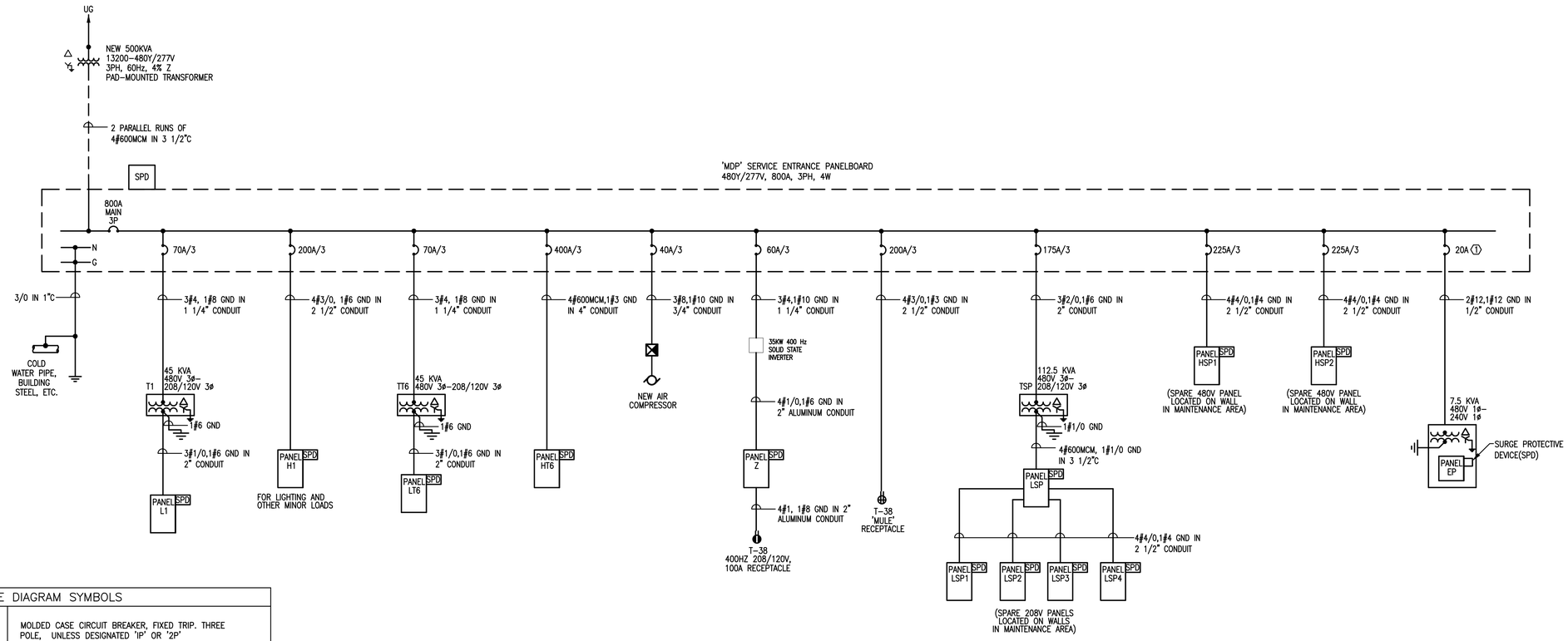

ELECTRICAL POWER RISER DIAGRAM

NOT TO SCALE

KEYNOTES:

(1) INSTALL HANDLE LOCK ON BREAKER IN ACCORDANCE WITH UFC 3-520-01 ARTICLE 3-2.4

ONE LINE DIAGRAM SYMBOLS

30A 2P	MOLDED CASE CIRCUIT BREAKER, FIXED TRIP. THREE POLE, UNLESS DESIGNATED 'IP' OR '2P'
	GROUND CONNECTION – TO STANDARD ROD TYPE ELECTRODE TO NEAREST STRUCTURAL STEEL (#6 MIN. CONDUCTOR IF NOT SHOWN)
30A 3P	DISCONNECT SWITCH
	STARTER (FURNISHED WITH EQUIPMENT)
	POWER TRANSFORMER, DELTA-WYE CONFIGURATION.
	MOTOR
	NORMALLY OPEN CONTACT

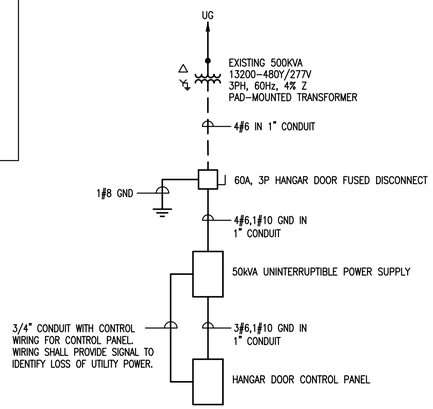

HANGAR DOOR POWER RISER DIAGRAM

NOT TO SCALE

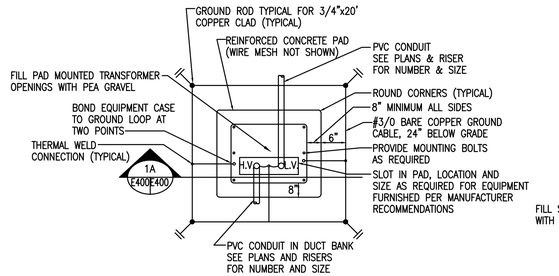

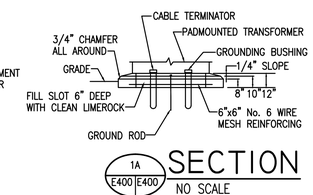

PAD MOUNTED TRANSFORMER DETAILS

NOTE: ALL GROUND CONNECTIONS SHALL BE BRAZED OR EXOTHERMIC WELDED

PAD MOUNTED TRANSFORMER DETAIL NOTE:

TYPICAL DETAIL COORDINATE EXACT REQUIREMENTS WITH 4-COUNTY PRIOR TO INSTALL.

SECTION

NO SCALE

DAVID M. BAGWELL
LICENSE
No. 59251
STATE OF FLORIDA
PROFESSIONAL ENGINEER
3/16/18

BAGWELL ENGINEERING, INC
216 E. Government St. FL Authorization No. 30167
Pensacola, FL 32502 FL PE No. 59251
Phone: (850) 462-8040 Job Number: 14-096

14TH CIVIL ENGINEER SQ
BEST SERVING THE BEST

Symbol No.	Description	Date	Approved

REVISIONS

Designed By: D. COLEMAN
Drawn By: D. COLEMAN
Checked By: D. BAGWELL
Reviewed By: D. BAGWELL
Date: 06 SEPT 2017
File No. -
CADD File Name: -
Solicitation Number: FEPZ 10-1001

COLUMBUS
AIR FORCE BASE

HEFFERNAN HOLLAND MORGAN
ARCHITECTURE
319 S. ALCANIZ ST. • PENSACOLA, FL 32502
850-433-2799 • AA-C001942 • HHMA.COM

REPAIR MAINTENANCE
HANGAR 456

ELECTRICAL POWER RISER DIAGRAM

Sheet
E-400

ISSUED FOR CONSTRUCTION

UTILITY NOTE:

- THE CONTRACTOR MUST DIRECTLY PAY 4-COUNTY ELECTRIC POWER ASSOCIATION (4-COUNTY) TO PROVIDE THE PAD AND TRANSFORMER. 4-COUNTY MAY BE REACHED AT 662-245-0731 AND REQUIRES NOT LESS THAN 21 DAYS TO RESPOND.

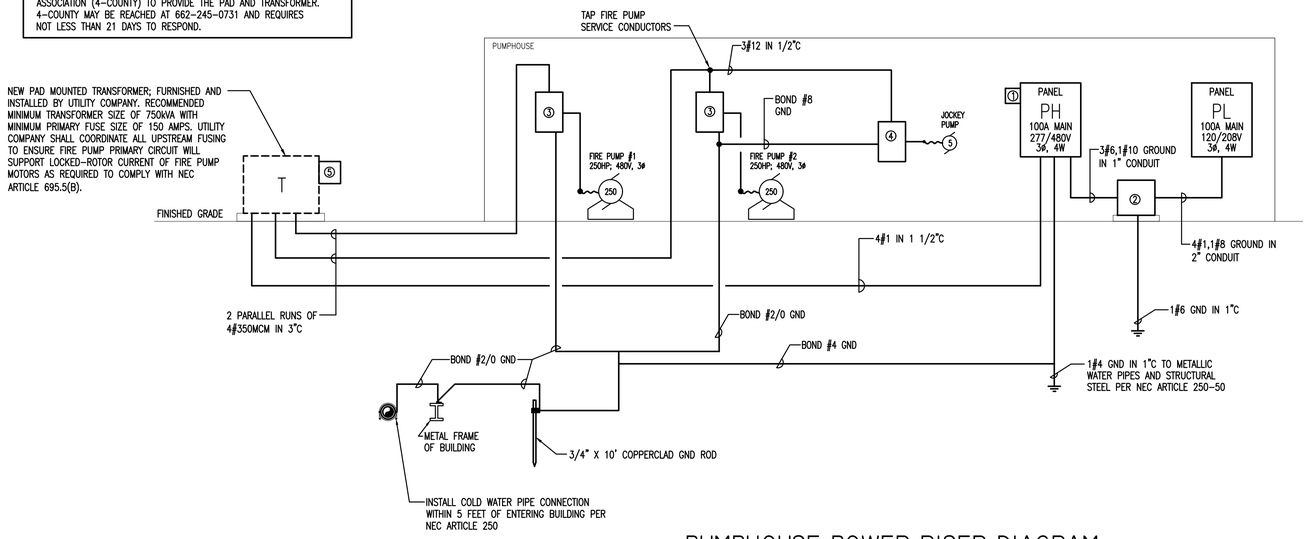

PUMPHOUSE POWER RISER DIAGRAM

NOT TO SCALE

KEYNOTES:

① SURGE SUPPRESSOR

② GENERAL PURPOSE 30KVA 480△- 208Y/120V, 3#, 4W, DRY TYPE TRANSFORMER.

③ SERVICE ENTRANCE RATED FIRE PUMP CONTROLLER.

④ JOCKEY PUMP CONTROLLER

⑤ ELECTRICAL DEMAND METER

NOTE: THE GOVERNMENT REQUESTED THAT THE GENERATOR AND AUTOMATIC TRANSFER SWITCH BE REMOVED FROM THE PROJECT. THE DESIGNER OF RECORD INTERPRETS THIS AS THE POWER ON BASE IS DEEMED 'RELIABLE' BY THE GOVERNMENT AND THEREFORE A BACKUP GENERATOR IS NOT REQUIRED.

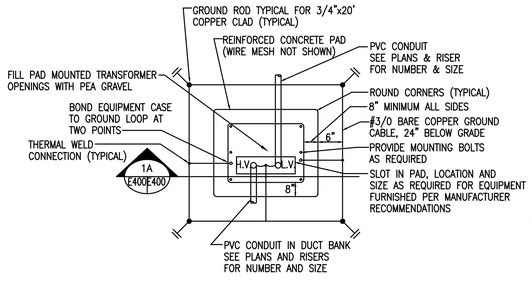

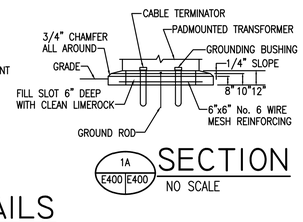

SECTION

NO SCALE

PAD MOUNTED TRANSFORMER DETAILS

NOTE: ALL GROUND CONNECTIONS SHALL BE BRAZED OR EXOTHERMIC WELDED

PAD MOUNTED TRANSFORMER DETAIL NOTE:

TYPICAL DETAIL COORDINATE EXACT REQUIREMENTS WITH 4-COUNTY PRIOR TO INSTALL.

14TH CIVIL ENGINEER SQ
BEST SERVING THE BEST

Symbol	No.	Description	Date	Approved

REVISIONS

Designed By: D. COLEMAN
Drawn By: D. COLEMAN
Checked By: D. BAGWELL
Reviewed By: D. BAGWELL
Date: 06 SEPT 2017
File No. -
CADD File Name: -
Solicitation Number: FEPZ 10-1001

COLUMBUS AIR FORCE BASE

HEFFERNAN HOLLAND MORGAN
ARCHITECTURE
310 S. ALCANIZ ST. • PENSACOLA, FL 32502
850.433.2799 • AA0001982 • HHMA.COM

REPAIR MAINTENANCE HANGAR 456

ELECTRICAL POWER RISER DIAGRAM-PUMPHOUSE

ISSUED FOR CONSTRUCTION

DAVID M. BAGWELL LICENSE No. 59251 STATE OF FLORIDA PROFESSIONAL ENGINEER
9/6/17

BAGWELL ENGINEERING, INC
216 E. Government St. Pensacola, FL 32502
Phone: (850) 462-8040
FL Authorization No. 30167
FL PE No. 59251
Job Number: 14-096

Sheet
E-401

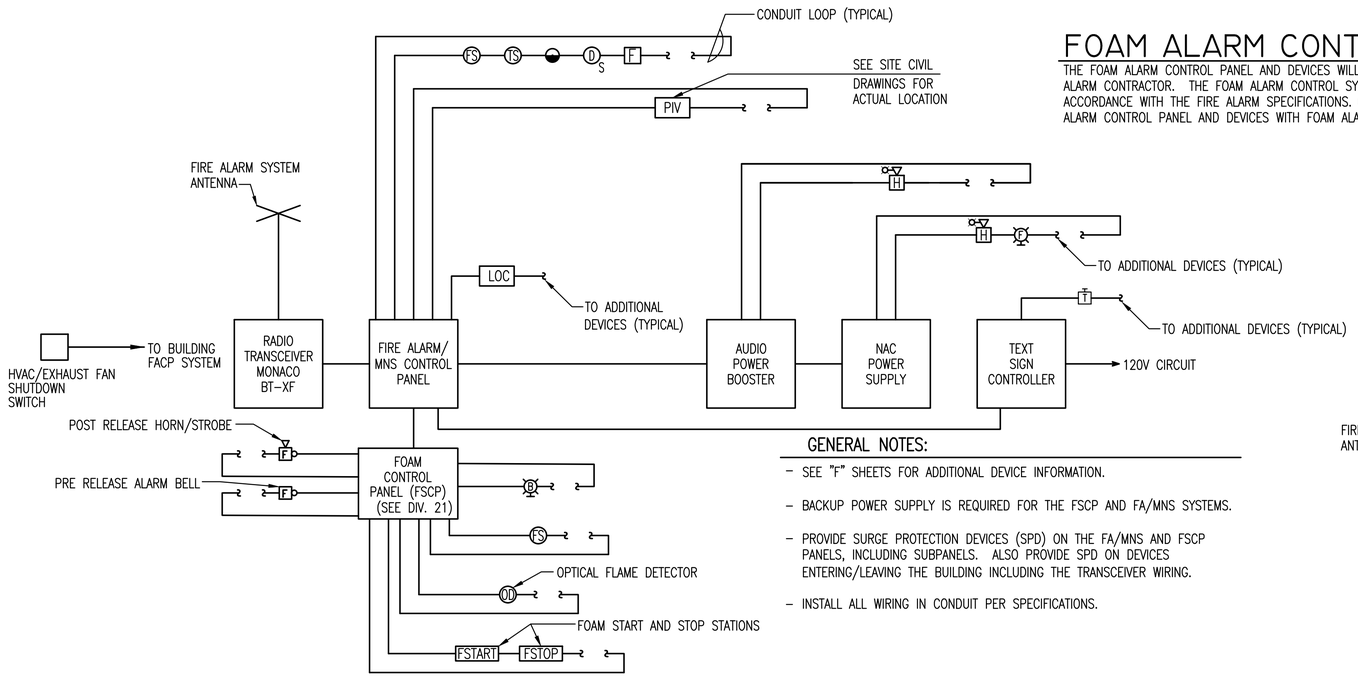

FOAM ALARM CONTROL PANEL

THE FOAM ALARM CONTROL PANEL AND DEVICES WILL BE INSTALLED BY THE FIRE ALARM CONTRACTOR. THE FOAM ALARM CONTROL SYSTEM WILL BE INSTALLED IN STRICT ACCORDANCE WITH THE FIRE ALARM SPECIFICATIONS. COORDINATE INSTALLATION OF FOAM ALARM CONTROL PANEL AND DEVICES WITH FOAM ALARM CONTRACTOR.

GENERAL NOTES:

- SEE "F" SHEETS FOR ADDITIONAL DEVICE INFORMATION.
- BACKUP POWER SUPPLY IS REQUIRED FOR THE FSCP AND FA/MNS SYSTEMS.
- PROVIDE SURGE PROTECTION DEVICES (SPD) ON THE FA/MNS AND FSCP PANELS, INCLUDING SUBPANELS. ALSO PROVIDE SPD ON DEVICES ENTERING/LEAVING THE BUILDING INCLUDING THE TRANSCEIVER WIRING.
- INSTALL ALL WIRING IN CONDUIT PER SPECIFICATIONS.

HANGAR 456 FIRE ALARM/MNS/FOAM CONTROL RISER DIAGRAM

NOT TO SCALE

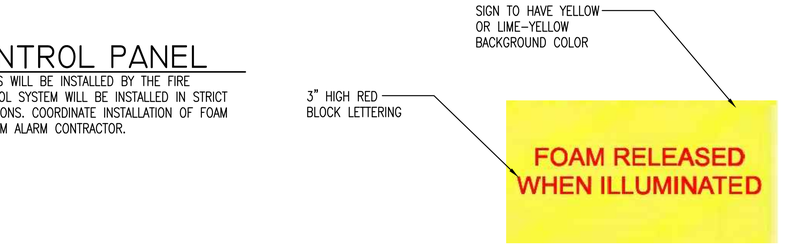

BLUE BEACON SIGN

NOT TO SCALE

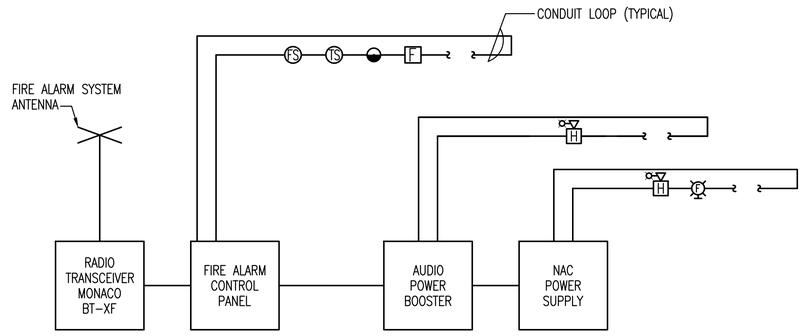

PUMPHOUSE FIRE ALARM RISER DIAGRAM

NOT TO SCALE

FIRE ALARM / MASS NOTIFICATION SYSTEM FUNCTIONAL MATRIX

MATRIX IS A GUIDELINE FOR SYSTEM OPERATION. COORDINATE WITH GOVERNMENT FIRE DEPARTMENT WHEN DEVELOPING SHOP DRAWINGS. ADJUST MATRIX TO COMPLY WITH FIRE DEPARTMENT REQUIREMENTS.

		ANNUNCIATION AT LOCAL PANEL			NOTIFICATION														AUXILIARY FUNCTIONS				
		AUDIO VISUAL ALARM INDICATION	AUDIO-VISUAL TROUBLE INDICATION	AUDIO-VISUAL SUPERVISORY INDICATION	FIRE ALARM SIGNAL TO RECEIVING STATION	COMMON FIRE ALARM TROUBLE SIGNAL TO RECEIVING STATION	COMMON MNS TROUBLE SIGNAL TO RECEIVING STATION	COMMON FIRE ALARM SUPERVISORY SIGNAL TO RECEIVING STATION	COMMON FOAM SUPERVISORY SIGNAL TO RECEIVING STATION	FOAM SYSTEM DISABLED SUPERVISORY SIGNAL TO RECEIVING STATION	LOW TEMPERATURE SUPERVISORY SIGNAL TO RECEIVING STATION AND EMCS	INITIATE FIRE ALARM VISUAL NOTIFICATION	INITIATE GENERAL FIRE ALARM AUDIBLE NOTIFICATION	DISABLE GENERAL FIRE ALARM VOICE MESSAGE (IF ENABLED)	INITIATE FOAM RELEASE VOICE MESSAGE	INDIVIDUAL WATERFLOW ALARM PER RISER SIGNAL TO RECEIVING STATION	SUPERVISORY MNS OVERRIDE OF FA SIGNAL TO RECEIVING STATION	EMERGENCY SHUTDOWN OF HVAC SIGNAL TO RECEIVING STATION	SHUT DOWN SUPPLY, RECIRCULATING, EXHAUST & HIGH VOLUME SLOW ROTATING FANS IN HANGAR BAY	SHUT DOWN ASSOCIATED HVAC UNIT	RECORD EVENT IN FACP HISTORY BUFFER	PLAY MNS MESSAGE ASSOCIATED WITH BUTTON	OVERRIDE FA MESSAGE	EMERGENCY SHUTDOWN OF ALL HVAC EQUIPMENT
ALARM CONDITIONS	MANUAL PULL STATION	X			X							X	X									X			
	SMOKE DETECTOR	X			X							X	X									X			
	SPRINKLER SYSTEM WATERFLOW SWITCHES	X			X							X	X				X					X			
	GENERAL ALARM FROM FOAM SYSTEM CONTROL PANEL	X										X	X									X			
	FOAM/WATER RELEASE FROM FOAM SYSTEM CONTROL PANEL	X										X			X	X				X		X			
TROUBLE CONDITIONS	FACP TROUBLE		X			X																X			
	FACP AC POWER FAILURE		X			X																X			
	FACP SYSTEM LOW BATTERY		X			X																X			
	FACP OPEN CIRCUIT		X			X																X			
	FACP GROUND FAULT		X			X																X			
	FOAM SYSTEM CONTROLLER TROUBLE		X																			X			
	REMOTE POWER SUPPLY TROUBLE		X			X																X			
	MNS AC POWER FAILURE						X																		
	MNS SYSTEM LOW BATTERY						X																		
	MNS OPEN CIRCUIT						X																		
	MNS GROUND FAULT						X																		
	MNS NOTIFICATION APPLIANCE CIRCUIT SHORT						X																		
SUPERVISORY CONDITIONS	DUCT SMOKE DETECTOR - SUPERVISORY			X				X													X	X			
	SPRINKLER CONTROL VALVE			X				X														X			
	COMMON FA SUPERVISORY FROM FOAM SYSTEM			X					X													X			
	COMMON FOAM/WATER SUPERVISORY FROM FOAM SYSTEM			X																		X			
	OPTICAL FLAME DETECTION INHIBITED SUPERVISORY FROM FOAM SYSTEM			X																		X			
	OPTICAL FLAME DETECTION DISCONNECT SUPERVISORY FROM FOAM SYSTEM			X																		X			
	FOAM SYSTEM START STATION BUTTON DEPRESSED			X	X							X			X							X			
	FOAM SYSTEM ONE OPTICAL FLAME DETECTOR			X								X			X							X			
	FOAM SYSTEM TWO OPTICAL FLAME DETECTORS			X								X			X							X			
	FOAM SYSTEM STOP STATION BUTTON DEPRESSED			X																		X			
	TEMPERATURE SENSORS IN HANGAR			X							X											X			
	LOW FOAM CONCENTRATE LEVEL			X																		X			
	FOAM/WATER & CONCENTRATE CONTROL VALVE SUPERVISORY			X						X												X			
	MNS ACU PTT MICROPHONE ACTIVE - PRIORITY 1			X								X						X						X	
	MNS LIVE VOICE MESSAGE ACTIVE - PRIORITY 2			X								X						X						X	
	MNS LOC MICROPHONE ACTIVE - PRIORITY 3			X								X						X						X	
	MNS DIGITAL MESSAGE 1-3 ACTIVE - PRIORITY 4-6			X								X													
	MNS DIGITAL MESSAGE 5-8 ACTIVE			X								X													
	MNS LOC HVAC SHUTDOWN SWITCH ACTIVE			X																X			X		X

HANGAR 456 FIRE ALARM SYSTEM MATRIX

FIRE ALARM SYSTEM FUNCTIONAL MATRIX

MATRIX IS A GUIDELINE FOR SYSTEM OPERATION. COORDINATE WITH GOVERNMENT FIRE DEPARTMENT WHEN DEVELOPING SHOP DRAWINGS. ADJUST MATRIX TO COMPLY WITH FIRE DEPARTMENT REQUIREMENTS.

		ANNUNCIATION AT LOCAL PANEL			NOTIFICATION						AUXILIARY FUNCTIONS
		AUDIO VISUAL ALARM INDICATION	AUDIO-VISUAL TROUBLE INDICATION	AUDIO-VISUAL SUPERVISORY INDICATION	FIRE ALARM SIGNAL TO RECEIVING STATION	COMMON FIRE ALARM TROUBLE SIGNAL TO RECEIVING STATION	COMMON FIRE ALARM SUPERVISORY SIGNAL TO RECEIVING STATION	INITIATE FIRE ALARM VISUAL NOTIFICATION	INITIATE GENERAL FIRE ALARM AUDIBLE NOTIFICATION	INDIVIDUAL WATERFLOW ALARM PER RISER SIGNAL TO RECEIVING STATION	RECORD EVENT IN FACP HISTORY BUFFER
ALARM CONDITIONS	MANUAL PULL STATION	X			X			X	X		X
	SMOKE DETECTOR	X			X			X	X		X
	SPRINKLER SYSTEM WATERFLOW SWITCHES	X			X			X	X	X	X
	MAIN FIRE PUMP CONTROLLER PUMP RUNNING	X			X						X
	RESERVE FIRE PUMP CONTROLLER PUMP RUNNING	X			X						X
TROUBLE CONDITIONS	REMOTE POWER SUPPLY TROUBLE		X			X					X
	MAIN FIRE PUMP CONTROLLER TROUBLE		X			X					X
	RESERVE FIRE PUMP CONTROLLER TROUBLE		X			X					X
SUPERVISORY CONDITIONS	SPRINKLER CONTROL VALVE			X			X				X
	MAIN FIRE PUMP CONTROLLER PUMP LOSS OF POWER			X			X				X
	MAIN FIRE PUMP CONTROLLER PUMP PHASE REVERSAL			X			X				X
	RESERVE FIRE PUMP CONTROLLER PUMP LOSS OF POWER			X			X				X
	RESERVE FIRE PUMP CONTROLLER PUMP PHASE REVERSAL			X			X				X

PUMPHOUSE FIRE ALARM SYSTEM MATRIX

DAVID M. BAGWELL LICENSE No. 59251 STATE OF FLORIDA PROFESSIONAL ENGINEER 9/6/17

BAGWELL ENGINEERING, INC
216 E. Government St. FL Authorization No. 30167
Pensacola, FL 32502 FL PE No. 59251
Phone: (850) 462-8040 Job Number: 14-096

14TH CIVIL ENGINEER SQ — BEST SERVING THE BEST

Symbol No.	Description	Date	Approved

REVISIONS

Date: 06 SEPT 2017
File No. -
CADD File Name: -
Solicitation Number: EEPZ 10-1001

Designed By: D. COLEMAN
Drawn By: D. COLEMAN
Checked By: D. BAGWELL
Reviewed By: D. BAGWELL

COLUMBUS AIR FORCE BASE

HERRNAN HOLLAND MORGAN
ARCHITECTURE
319 S. ALCANIZ ST. • PENSACOLA, FL 32502
850.433.2799 • AA.C001942 • HHMA.COM

REPAIR MAINTENANCE HANGAR 456

FIRE ALARM/FOAM CONTROL RISER

ISSUED FOR CONSTRUCTION

Sheet E-402

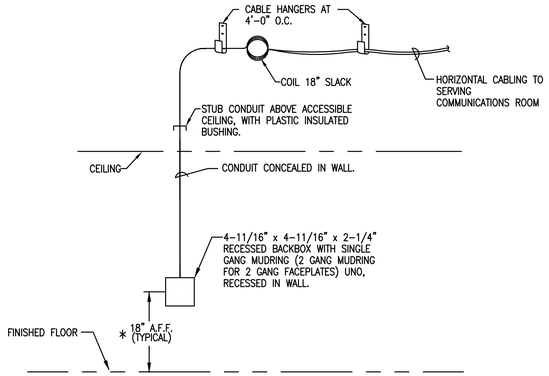

* NOTES: COMMUNICATIONS OUTLET (CO) MOUNTING HEIGHT MAY VARY AT CABINETS OR CASEWORK. LOCATE AND MOUNT CO's AS DIRECTED BY ARCHITECT IN FIELD. MATCH HEIGHT OF ADJACENT ELECTRICAL POWER OUTLETS.

FOR ALL COMMUNICATIONS OUTLETS LOCATED ABOVE MILLWORK, MOUNT 6" ABOVE COUNTER FROM BOTTOM OF OUTLET AND LOCATE ADJACENT TO POWER RECEPTACLE.

1 TYPICAL COMMUNICATIONS OUTLET MOUNTING DETAIL
NOT TO SCALE

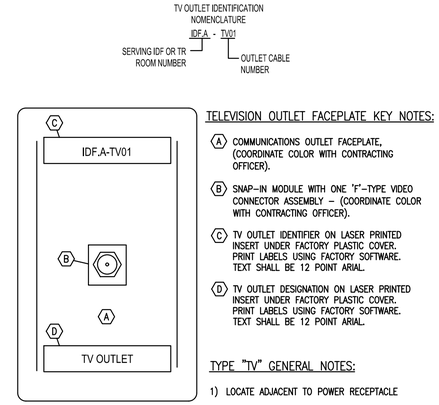

TELEVISION OUTLET FACEPLATE KEY NOTES:

(A) COMMUNICATIONS OUTLET FACEPLATE, (COORDINATE COLOR WITH CONTRACTING OFFICER).

(B) SNAP-IN MODULE WITH ONE 'F'-TYPE VIDEO CONNECTOR ASSEMBLY - (COORDINATE COLOR WITH CONTRACTING OFFICER).

(C) TV OUTLET IDENTIFIER ON LASER PRINTED INSERT UNDER FACTORY PLASTIC COVER. PRINT LABELS USING FACTORY SOFTWARE. TEXT SHALL BE 12 POINT ARIAL.

(D) TV OUTLET DESIGNATION ON LASER PRINTED INSERT UNDER FACTORY PLASTIC COVER. PRINT LABELS USING FACTORY SOFTWARE. TEXT SHALL BE 12 POINT ARIAL.

TYPE "TV" GENERAL NOTES:

1) LOCATE ADJACENT TO POWER RECEPTACLE

2 TELEVISION OUTLET FACEPLATE DETAIL
NOT TO SCALE

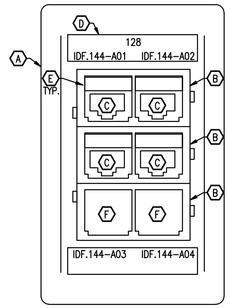

COMMUNICATIONS OUTLET KEY NOTES:

(A) COMMUNICATIONS OUTLET FACEPLATE, (COORDINATE FACEPLATE COLOR WITH ARCHITECTURAL).

(B) FLAT BEZEL TYPE, MODULE INSERT FOR FACEPLATE, COLOR TO MATCH FACEPLATE.

(C) SNAP-IN COUPLER WITH 8-PIN MODULAR JACK ASSEMBLY. ALMOND COUPLER FOR (2) DATA JACKS.

(D) COMMUNICATIONS OUTLET IDENTIFIER (SEE "CO IDENTIFICATION NOMENCLATURE") ON LASER PRINTED INSERT UNDER FACTORY PLASTIC COVER.

(E) SNAP-IN "DATA" COLORED TAB

(F) SNAP-IN BLANK MODULE, COLOR TO MATCH FACEPLATE COLOR.

CO GENERAL NOTES:

1. SECURE CAT 6 CABLES TO JACK ASSEMBLIES USING FACTORY FURNISHED CABLE-TIE EYELETS AND CABLE TIES FOR CABLE MANAGEMENT AND STRAIN RELIEF. CONFORM TO MANUFACTURER's PRINTED INSTALLATION INSTRUCTIONS.
2. SEE TYPICAL CO MOUNTING DETAILS FOR INSTALLATION OF COMMUNICATIONS OUTLETS.

3 TYPE COMMUNICATIONS OUTLET (CO) FACEPLATE DETAIL
NOT TO SCALE

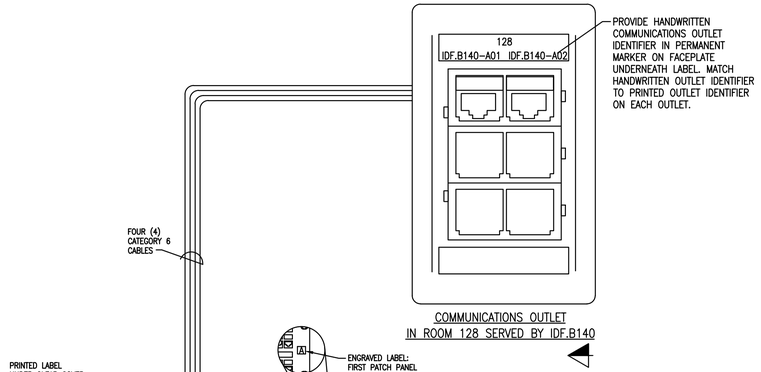

4 TYPICAL TIA/EIA 606B LABELING FROM MDF TO COMMUNICATIONS OUTLET
NOT TO SCALE

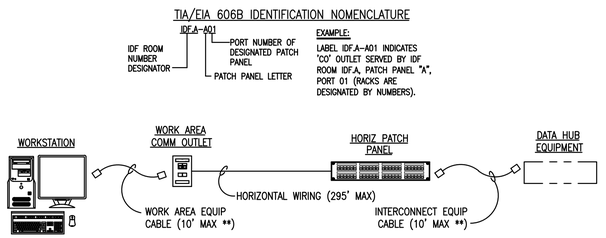

** NOTE:
TIA-568 ALLOWS A TOTAL OF 10 METERS (33 FEET) FOR THE TOTAL OF THE WORK AREA EQUIP CABLE, THE MDF OR IDF EQUIP CABLE, AND A SECOND CROSS-CONNECT OR PATCH CABLE IN THE MDF OR IDF. THE DESIGN FOR THIS PROJECT DOES NOT UTILIZE A SECOND CROSS-CONNECT OR PATCH CABLE IN THE MDF OR IDF. EQUIPMENT CABLE LENGTHS IN THE WORK AREA AND IN THE MDF OR IDF SHOULD BE KEPT AS SHORT AS POSSIBLE FOR ALL APPLICATIONS. MAXIMUM RECOMMENDED LENGTHS ARE AS INDICATED.

5 HORIZONTAL TELECOMMUNICATIONS LINK
NOT TO SCALE

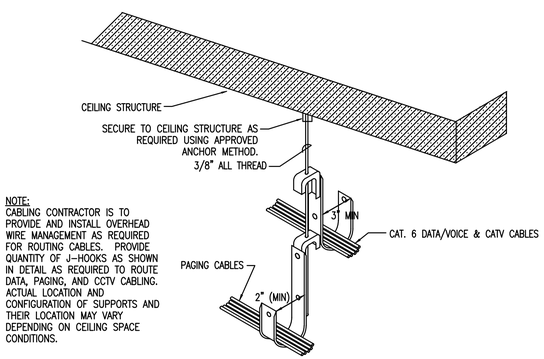

NOTE:
CABLING CONTRACTOR IS TO PROVIDE AND INSTALL OVERHEAD WIRE MANAGEMENT AS REQUIRED FOR ROUTING CABLES. PROVIDE QUANTITY OF J-HOOKS AS SHOWN IN DETAIL AS REQUIRED TO ROUTE DATA, PAGING, AND CCTV CABLING. ACTUAL LOCATION AND CONFIGURATION OF SUPPORTS AND THEIR LOCATION MAY VARY DEPENDING ON CEILING SPACE CONDITIONS.

6 TYPICAL COMMUNICATIONS CABLE HANGERS - "J" HOOKS
NOT TO SCALE

DAVID M. BAGWELL LICENSE No. 59251 STATE OF FLORIDA PROFESSIONAL ENGINEER
3/16/18

BAGWELL ENGINEERING, INC
216 E. Government St. FL Authorization No. 30167
Pensacola, FL 32502 FL PE No. 59251
Phone: (850) 462-8040 Job Number: 14-096

14TH CIVIL ENGINEER SQ
BEST SERVING THE BEST

Symbol No.	Description	Date	Approved

REVISIONS

Designed By: D. COLEMAN
Drawn By: D. COLEMAN
Checked By: D. BAGWELL
Reviewed By: D. BAGWELL
Date: 06 SEPT 2017
File No. .
CADD File Name: .
Solicitation Number: FA8903-17-B-0001

COLUMBUS AIR FORCE BASE

HEFFERNAN HOLLAND MORGAN
ARCHITECTURE
319 S. ALCANIZ ST. • PENSACOLA, FL 32502
850-433-3799 • AA.COA001948 • HHMA.COM

REPAIR MAINTENANCE HANGAR 456

TELECOMMUNICATIONS DETAILS

Sheet
E-500

ISSUED FOR CONSTRUCTION

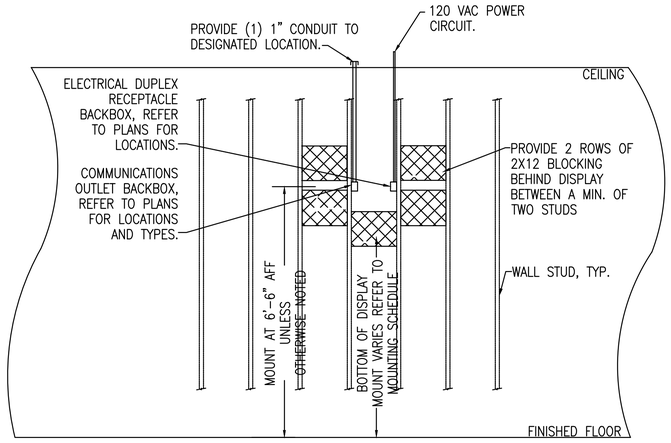

1 TV OUTLET ROUGH – IN DETAIL
NOT TO SCALE

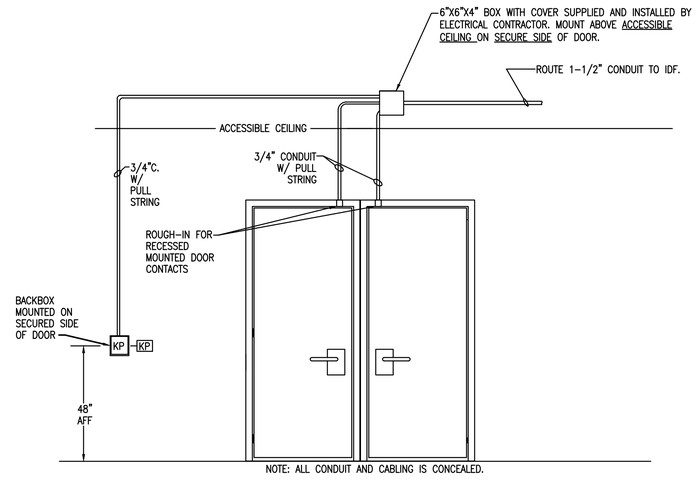

2 DOUBLE DOOR AT RECEPTION AREA WITH KEY PAD, AND CONTACTS DETAIL
NOT TO SCALE

NOTE: CONTRACTOR SHALL PROVIDE CONDUIT, PULL STRINGS COILED 4' AT EACH END, BACKBOXES AND BOXES. DEVICES, CABLE, AND CONNECTIONS SHALL BE PROVIDED BY THE GOVERNMENT.

DAVID M. BAGWELL LICENSE No. 59251 STATE OF FLORIDA PROFESSIONAL ENGINEER
9/6/17

BAGWELL ENGINEERING, INC
216 E. Government St. FL Authorization No. 30167
Pensacola, FL 32502 FL PE No. 59251
Phone: (850) 462-8040 Job Number: 14-096

14TH CIVIL ENGINEER SQ
BEST SERVING THE BEST

Symbol No.	Description	Date	Approved
	REVISIONS		

Designed By: D. COLEMAN
Drawn By: D. COLEMAN
Checked By: D. BAGWELL
Reviewed By: D. BAGWELL
Date: 06 SEPT 2017
File No. .
CADD File Name: .
Solicitation Number: FEPZ 10-1001

HETTERNAN HOLLAND MORGAN
ARCHITECTURE
310 S. ALCANIZ ST. • PENSACOLA, FL 32502
850.433.2799 • AAC001982 • HHMA.COM

COLUMBUS AIR FORCE BASE

REPAIR MAINTENANCE HANGAR 456

TELECOMMUNICATIONS DETAILS

Sheet
E-501

ISSUED FOR CONSTRUCTION

277/480 VOLT 3ø 4W
800 AMP MAIN BREAKER
MAIN BREAKER SHALL BE FULLY RATED

CIRCUIT BREAKER PANEL SCHEDULE
NEW PANEL MDP

SURFACE MOUNTED

CKT	LOAD DESCRIPTION	BREAKER POLE	BREAKER AMP	KVA/PHASE A	KVA/PHASE B	KVA/PHASE C	KVA/PHASE A	KVA/PHASE B	KVA/PHASE C	BREAKER AMP	BREAKER POLE	LOAD DESCRIPTION	CKT
1				35.5			12.7						2
3	PANEL 'H1'	3	200		39.3			13.7		70	3	PANEL 'L1' VIA TRANSFORMER	4
5						38.6			10.18				6
7				45.0			9.6						8
9	PANEL HT6	3	400		45.0			9.6		70	3	PANEL 'LT6' VIA TRANSFORMER	10
11						45.0			9.6				12
13				7.8			11.7						14
15	AIR COMPRESSOR	3	40		7.8			11.7		60	3	400HZ GENERATOR PANEL	16
17						7.8			11.7				18
19													20
21	PANEL 'LSP' VIA TRANSFORMER	3	175							225	3	PANEL 'HSP1'	22
23													24
25							16						26
27	PANEL 'HSP2'	3	225					16		200	3	T-38 MULE RECEPTACLE	28
29									16				30
31				16			16						32
33	T-38 MULE RECEPTACLE	3	200		16			16		200	3	T-38 MULE RECEPTACLE	34
35						16			16				36
37				16			16						38
39	T-38 MULE RECEPTACLE	3	200		16			16		200	3	T-38 MULE RECEPTACLE	40
41						16			16				42
43	SPACE ONLY	–	––				16						44
45	SPACE ONLY	–	––					16		200	3	T-38 MULE RECEPTACLE	46
47	SPACE ONLY	–	––						16				48
49	SPACE ONLY	–	––							20 ①	2	PANEL EP	50
51	SPACE ONLY	–	––										52
53	SPACE ONLY	–	––							––	–	SPACE ONLY	54
55	SPACE ONLY	–	––										56
57	SPACE ONLY	–	––							30	3	SURGE SUPPRESSOR	58
59	SPACE ONLY	–	––										60

① PROVIDE HANDLE LOCK ON BREAKER

TOTAL CONNECTED KVA: 218.3 (A) | 223.1 (B) | 218.9 (C)

MINIMUM INTERRUPTING CAPACITY: 35,000 AMPS SYMMETRICAL

277/480 VOLT 3ø 4W
225 AMP MAIN LUG ONLY

CIRCUIT BREAKER PANEL SCHEDULE
NEW PANEL HI

SURFACE MOUNTED

CKT	LOAD DESCRIPTION	BREAKER POLE	BREAKER AMP	KVA/PHASE A	KVA/PHASE B	KVA/PHASE C	KVA/PHASE A	KVA/PHASE B	KVA/PHASE C	BREAKER AMP	BREAKER POLE	LOAD DESCRIPTION	CKT
1	LTS-101/102/110/112-115	1	20	1.2			1.4			20	1	LTS-103-109/111	2
3	LTS-MAINTENANCE AREA 100	1	20		3.6			3.6		20	1	LTS-MAINTENANCE AREA 100	4
5	LTS-MAINTENANCE AREA 100	1	20			3.6			3.6	20	1	LTS-MAINTENANCE AREA 100	6
7	LTS-MAINTENANCE AREA 100	1	20	1.2			.3			20	1	LTS-STOR 116/AFF ROOM 117	8
9	LTS-EXTERIOR	1	20					.7		20	1	LTS-EXTERIOR	10
11	SPARE	1	20							20	1	SPARE	12
13	SPARE	1	20							20	1	SPARE	14
15	SPARE	1	20							20	1	SPARE	16
17	SPARE	1	20							20	1	SPARE	18
19	SPACE ONLY	–	––							20	1	SPARE	20
21	SPACE ONLY	–	––							––	–	SPACE ONLY	22
23	SPACE ONLY	–	––							––	–	SPACE ONLY	24
25	SPACE ONLY	–	––				.9						26
27	SPACE ONLY	–	––					.9		20	3	EF-3	28
29	SPACE ONLY	–	––						.9				30
31				.9			.9						32
33	EF-1	3	20		.9			.9		20	3	EF-4	34
35						.9			.9				36
37				.9			9.5						38
39	EF-2	3	20		.9			9.5		50	3	HPCU-3	40
41						.9			9.5				42
43				.9			9.5						44
45	HVLSF-1	3	15		.9			9.5		50	3	HPCU-3	46
47						.9			9.5				48
49				.9			6.1						50
51	HVLSF-2	3	15		.9			6.1		30	3	AHU-3	52
53						.9			6.1				54
55				.9									56
57	HVLSF-3	3	15		.9					30	3	SURGE SUPPRESSOR	58
59						.9							60

TOTAL CONNECTED KVA: 35.50 (A) | 39.30 (B) | 38.60 (C)

MINIMUM INTERRUPTING CAPACITY: 35,000 AMPS SYMMETRICAL

277/480 VOLT 3ø 4W
400 AMP MAIN LUG ONLY

CIRCUIT BREAKER PANEL SCHEDULE
NEW PANEL HT6

SURFACE MOUNTED

CKT	LOAD DESCRIPTION	BREAKER POLE	BREAKER AMP	KVA/PHASE A	KVA/PHASE B	KVA/PHASE C	KVA/PHASE A	KVA/PHASE B	KVA/PHASE C	BREAKER AMP	BREAKER POLE	LOAD DESCRIPTION	CKT
1				2.5			5.0						2
3	SPECIAL RECEPTACLE	3	30		2.5			5.0		60	3	SPECIAL RECEPTACLE	4
5						2.5			5.0				6
7				2.5			5.0						8
9	SPECIAL RECEPTACLE	3	30		2.5			5.0		60	3	SPECIAL RECEPTACLE	10
11						2.5			5.0				12
13				2.5			5.0						14
15	SPECIAL RECEPTACLE	3	30		2.5			5.0		60	3	SPECIAL RECEPTACLE	16
17						2.5			5.0				18
19				2.5			5.0						20
21	SPECIAL RECEPTACLE	3	30		2.5			5.0		60	3	SPECIAL RECEPTACLE	22
23						2.5			5.0				24
25				2.5			5.0						26
27	SPECIAL RECEPTACLE	3	30		2.5			5.0		60	3	SPECIAL RECEPTACLE	28
29						2.5			5.0				30
31				2.5			5.0						32
33	SPECIAL RECEPTACLE	3	30		2.5			5.0		60	3	SPECIAL RECEPTACLE	34
35						2.5			5.0				36
37	SPACE ONLY	–	––							––	–	SPACE ONLY	38
39	SPACE ONLY	–	––							30	3	SURGE SUPPRESSOR	40
41	SPACE ONLY	–	––										42

TOTAL CONNECTED KVA: 45.00 (A) | 45.0 (B) | 45.0 (C)

MINIMUM INTERRUPTING CAPACITY: 35,000 AMPS SYMMETRICAL

277/480 VOLT 3ø 4W
225 AMP MAIN LUG ONLY

CIRCUIT BREAKER PANEL SCHEDULE
NEW PANEL HSP1

SURFACE MOUNTED

CKT	LOAD DESCRIPTION	BREAKER POLE	BREAKER AMP	KVA/PHASE A	KVA/PHASE B	KVA/PHASE C	KVA/PHASE A	KVA/PHASE B	KVA/PHASE C	BREAKER AMP	BREAKER POLE	LOAD DESCRIPTION	CKT
1													2
3	SPARE	3	30							60	3	SPARE	4
5													6
7													8
9	SPARE	3	30							60	3	SPARE	10
11													12
13													14
15	SPARE	3	30							60	3	SPARE	16
17													18
19	SPACE ONLY	–	––							––	–	SPACE ONLY	20
21	SPACE ONLY	–	––							––	–	SPACE ONLY	22
23	SPACE ONLY	–	––							––	–	SPACE ONLY	24
25	SPACE ONLY	–	––							––	–	SPACE ONLY	26
27	SPACE ONLY	–	––							––	–	SPACE ONLY	28
29	SPACE ONLY	–	––							––	–	SPACE ONLY	30
31	SPACE ONLY	–	––							––	–	SPACE ONLY	32
33	SPACE ONLY	–	––							––	–	SPACE ONLY	34
35	SPACE ONLY	–	––							––	–	SPACE ONLY	36
37	SPACE ONLY	–	––										38
39	SPACE ONLY	–	––							30	3	SURGE SUPPRESSOR	40
41	SPACE ONLY	–	––										42

TOTAL CONNECTED KVA: –– (A) | –– (B) | –– (C)

MINIMUM INTERRUPTING CAPACITY: 35,000 AMPS SYMMETRICAL

**SPARE PANEL; PANEL IS FOR FUTURE USER LOADS.

277/480 VOLT 3ø 4W
225 AMP MAIN LUG ONLY

CIRCUIT BREAKER PANEL SCHEDULE
NEW PANEL HSP2

SURFACE MOUNTED

CKT	LOAD DESCRIPTION	BREAKER POLE	BREAKER AMP	KVA/PHASE A	KVA/PHASE B	KVA/PHASE C	KVA/PHASE A	KVA/PHASE B	KVA/PHASE C	BREAKER AMP	BREAKER POLE	LOAD DESCRIPTION	CKT
1													2
3	SPARE	3	30							60	3	SPARE	4
5													6
7													8
9	SPARE	3	30							60	3	SPARE	10
11													12
13													14
15	SPARE	3	30							60	3	SPARE	16
17													18
19	SPACE ONLY	–	––							––	–	SPACE ONLY	20
21	SPACE ONLY	–	––							––	–	SPACE ONLY	22
23	SPACE ONLY	–	––							––	–	SPACE ONLY	24
25	SPACE ONLY	–	––							––	–	SPACE ONLY	26
27	SPACE ONLY	–	––							––	–	SPACE ONLY	28
29	SPACE ONLY	–	––							––	–	SPACE ONLY	30
31	SPACE ONLY	–	––							––	–	SPACE ONLY	32
33	SPACE ONLY	–	––							––	–	SPACE ONLY	34
35	SPACE ONLY	–	––							––	–	SPACE ONLY	36
37	SPACE ONLY	–	––										38
39	SPACE ONLY	–	––							30	3	SURGE SUPPRESSOR	40
41	SPACE ONLY	–	––										42

TOTAL CONNECTED KVA: –– (A) | –– (B) | –– (C)

MINIMUM INTERRUPTING CAPACITY: 35,000 AMPS SYMMETRICAL

**SPARE PANEL; PANEL IS FOR FUTURE USER LOADS.

115/200 VOLT 3ø 4W
125 AMP MAIN BREAKER

CIRCUIT BREAKER PANEL SCHEDULE
NEW PANEL Z

SURFACE MOUNTED

CKT	LOAD DESCRIPTION	BREAKER POLE	BREAKER AMP	KVA/PHASE A	KVA/PHASE B	KVA/PHASE C	KVA/PHASE A	KVA/PHASE B	KVA/PHASE C	BREAKER AMP	BREAKER POLE	LOAD DESCRIPTION	CKT
1				7.5			7.5						2
3	400HZ RECEPTACLE	3	100		7.5			7.5		100	3	400HZ RECEPTACLE	4
5						7.5			7.5				6
7				7.5			7.5						8
9	400HZ RECEPTACLE	3	100		7.5			7.5		100	3	400HZ RECEPTACLE	10
11						7.5			7.5				12
13				7.5			7.5						14
15	400HZ RECEPTACLE	3	100		7.5			7.5		100	3	400HZ RECEPTACLE	16
17						7.5			7.5				18
19	SPACE ONLY	–	––							––	–	SPACE ONLY	20
21	SPACE ONLY	–	––							––	–	SPACE ONLY	22
23	SPACE ONLY	–	––							––	–	SPACE ONLY	24
25	SPACE ONLY	–	––							––	–	SPACE ONLY	26
27	SPACE ONLY	–	––							––	–	SPACE ONLY	28
29	SPACE ONLY	–	––							––	–	SPACE ONLY	30
31	SPACE ONLY	–	––							––	–	SPACE ONLY	32
33	SPACE ONLY	–	––							––	–	SPACE ONLY	34
35	SPACE ONLY	–	––							––	–	SPACE ONLY	36
37	SPACE ONLY	–	––										38
39	SPACE ONLY	–	––							30	3	SURGE SUPPRESSOR	40
41	SPACE ONLY	–	––										42

TOTAL CONNECTED KVA: 45.0 (A) | 45.0 (B) | 45.0 (C)

MINIMUM INTERRUPTING CAPACITY: 35,000 AMPS SYMMETRICAL

120/208 VOLT 3ø 4W
150 AMP MAIN BREAKER

CIRCUIT BREAKER PANEL SCHEDULE
NEW PANEL LT6

SURFACE MOUNTED

CKT	LOAD DESCRIPTION	BREAKER POLE	BREAKER AMP	KVA/PHASE A	KVA/PHASE B	KVA/PHASE C	KVA/PHASE A	KVA/PHASE B	KVA/PHASE C	BREAKER AMP	BREAKER POLE	LOAD DESCRIPTION	CKT
1				1.6			1.6						2
3	SPECIAL RECEPTACLE	3	30		1.6			1.6		30	3	SPECIAL RECEPTACLE	4
5						1.6			1.6				6
7				1.6			1.6						8
9	SPECIAL RECEPTACLE	3	30		1.6			1.6		30	3	SPECIAL RECEPTACLE	10
11						1.6			1.6				12
13				1.6			1.6						14
15	SPECIAL RECEPTACLE	3	30		1.6			1.6		30	3	SPECIAL RECEPTACLE	16
17						1.6			1.6				18
19	SPACE ONLY	–	––							––	–	SPACE ONLY	20
21	SPACE ONLY	–	––							––	–	SPACE ONLY	22
23	SPACE ONLY	–	––							––	–	SPACE ONLY	24
25	SPACE ONLY	–	––							––	–	SPACE ONLY	26
27	SPACE ONLY	–	––							––	–	SPACE ONLY	28
29	SPACE ONLY	–	––							––	–	SPACE ONLY	30
31	SPACE ONLY	–	––							––	–	SPACE ONLY	32
33	SPACE ONLY	–	––							––	–	SPACE ONLY	34
35	SPACE ONLY	–	––							––	–	SPACE ONLY	36
37	SPACE ONLY	–	––										38
39	SPACE ONLY	–	––							30	3	SURGE SUPPRESSOR	40
41	SPACE ONLY	–	––										42

TOTAL CONNECTED KVA: 9.60 (A) | 9.60 (B) | 9.60 (C)

MINIMUM INTERRUPTING CAPACITY: 10,000 AMPS SYMMETRICAL

120/208 VOLT 3ø 4W
150 AMP MAIN BREAKER

CIRCUIT BREAKER PANEL SCHEDULE
NEW PANEL LI

SURFACE MOUNTED

CKT	LOAD DESCRIPTION	BREAKER POLE	BREAKER AMP	KVA/PHASE A	KVA/PHASE B	KVA/PHASE C	KVA/PHASE A	KVA/PHASE B	KVA/PHASE C	BREAKER AMP	BREAKER POLE	LOAD DESCRIPTION	CKT
1	REC-ELEC/MECH 114	1	20	.18			.54			20	1	REC-SECRETARY 102	2
3	REC-CONFERENCE/TRAINING 111	1	20		.90			.72		20	1	REC-COMM 113	4
5	REC-COMM 113	1	20			.72			.36	20	1	REC-COMM 113	6
7	REC-CORR 115/CORR 112/STOR 109	1	20	.54			.72			20	1	REC-OFFICE 110	8
9	REC-OFFICE 110	1	20		.72			.18		20	1	REC-CONFERENCE/TRAINING 111	10
11	REC-CONFERENCE/TRAINING 111	1	20			.18			.18	20	1	REC-CONFERENCE/TRAINING 111	12
13	REC-CONFERENCE/TRAINING 111	1	20	.18			.54			20	1	REC-CONFERENCE/TRAINING 111	14
15	REC-OFFICE 107/LOCKERS 106	1	20		.90					20	1	SPARE	16
17	REC-MEN 103/JAN 104/WOMEN 105	1	20			.72			1.0	20	1	REC-WATER FOUNTAIN	18
19	REC-OFFICE 107	1	20	.54			.36			20	1	REC-EXTERIOR	20
21	REC-STOR 116	1	20		.54			.18		20	1	REC-AFF ROOM 117	22
23	REC-AFF ROOM 117	1	20			.18			1.08	20	1	REC-OFFICE 108	24
25	REC-MAINTENANCE AREA 100	1	20	.36			.36			20	1	REC-MAINTENANCE AREA 100	26
27	REC-MAINTENANCE AREA 100	1	20		.36			.36		20	1	REC-MAINTENANCE AREA 100	28
29	REC-MAINTENANCE AREA 100	1	20			.36			.36	20	1	REC-MAINTENANCE AREA 100	30
31	REC-MAINTENANCE AREA 100	1	20	.36			.54			20	1	REC-EXTERIOR	32
33	REC-MAINTENANCE AREA 100	1	20		.36			.58		20	1	UH-1,2	34
35	IRH-1,2	1	20			.36			.36	20	1	IRH-3,4	36
37	IRH-5,6	1	20	.36			1.6			25	1	EF-1	38
39	HPCU-1	2	20		.7			2.2		35	2	HPCU-2	40
41						.7			2.2				42
43	AHU-2	2	40	3.1			1.6			25	1	AD-1	44
45					3.1			.6		20	1	REC-REFRIGERATOR	46
47	REC-REFRIGERATOR	1	20			.6			.5	20	1	REC-DRINKING FOUNTAIN	48
49	SPARE	1	20							20	1	SPARE	50
51	SPARE	1	20							20	1	SPARE	52
53	HPWH-1	2	30			2.2				20	1	SPARE	54
55				2.2						20	1	SPARE	56
57	SPARE	1	20							20	1	SPARE	58
59	SPARE	1	20							––	–	SPACE ONLY	60
61	SPARE	1	20							––	–	SPACE ONLY	62
63	SPARE	1	20							––	–	SPACE ONLY	64
65	SPACE ONLY	–	––							––	–	SPACE ONLY	66
67	SPACE ONLY	–	––										68
69	SPACE ONLY	–	––							30	3	SURGE SUPPRESSOR	70
71	SPACE ONLY	–	––										72

TOTAL CONNECTED KVA: 14.08 (A) | 12.40 (B) | 12.06 (C)

MINIMUM INTERRUPTING CAPACITY: 10,000 AMPS SYMMETRICAL

PANEL MPD LOAD CALCULATION:

LOAD DESCRIPTION	CONNECTED LOAD (KVA)	DEMAND LOAD (KVA)
LIGHTING	19.20	24.0
GENERAL RECEPTACLES	21.72	15.86
HANGAR RECEPTACLES	547.20	288.00
MECH EQUIP	122.46	122.46
TOTAL	938.28 KVA	450.32 KVA

DEMAND LOAD: 450.32 KVA/.831 VOLTS = 541 AMPS @ 480V, 3ø

DAVID M. BAGWELL LICENSE No. 59251 STATE OF FLORIDA PROFESSIONAL ENGINEER 9/6/17

BAGWELL ENGINEERING, INC
216 E. Government St. FL Authorization No. 30167
Pensacola, FL 32502 FL PE No. 59251
Phone: (850) 462-8040 Job Number: 14-096

14TH CIVIL ENGINEER SQ — BEST SERVING THE BEST

Symbol No.	Description	Date	Approved

REVISIONS

Designed By: D. COLEMAN
Drawn By: D. COLEMAN
Checked By: D. BAGWELL
Reviewed By: D. BAGWELL
Date: 06 SEPT 2017
File No. -
CADD File Name: -
Solicitation Number: EEPZ 10-1001

COLUMBUS AIR FORCE BASE

HETTENRAN HOLLAND MORGAN
ARCHITECTURE
310 S. ALCANIZ ST. • PENSACOLA, FL 32502
850.433.2799 • AA0001942 • HHMA.COM

REPAIR MAINTENANCE HANGAR 456

PANEL SCHEDULES

Sheet
E-600

ISSUED FOR CONSTRUCTION

120/208 VOLT 3ø 4W
400 AMP MAIN BREAKER

CIRCUIT BREAKER PANEL SCHEDULE
NEW PANEL LSP

SURFACE MOUNTED

CKT	LOAD DESCRIPTION	BREAKER POLE	BREAKER AMP	KVA/PHASE A	KVA/PHASE B	KVA/PHASE C	KVA/PHASE A	KVA/PHASE B	KVA/PHASE C	BREAKER AMP	BREAKER POLE	LOAD DESCRIPTION	CKT
1				--			--						2
3	PANEL LSP1	3	225		--			--		225	3	PANEL LSP2	4
5						--			--				6
7				--			--						8
9	PANEL LSP3	3	225		--			--		225	3	PANEL LSP4	10
11						--			--				12
13	SPACE ONLY	–	--							--	–	SPACE ONLY	14
15	SPACE ONLY	–	--							--	–	SPACE ONLY	16
17	SPACE ONLY	–	--							--	–	SPACE ONLY	18
19	SPACE ONLY	–	--							--	–	SPACE ONLY	20
21	SPACE ONLY	–	--							--	–	SPACE ONLY	22
23	SPACE ONLY	–	--							--	–	SPACE ONLY	24
25	SPACE ONLY	–	--							--	–	SPACE ONLY	26
27	SPACE ONLY	–	--							--	–	SPACE ONLY	28
29	SPACE ONLY	–	--							--	–	SPACE ONLY	30
31	SPACE ONLY	–	--							--	–	SPACE ONLY	32
33	SPACE ONLY	–	--							--	–	SPACE ONLY	34
35	SPACE ONLY	–	--							--	–	SPACE ONLY	36
37	SPACE ONLY	–	--										38
39	SPACE ONLY	–	--							30	3	SURGE SUPPRESSOR	40
41	SPACE ONLY	–	--										42

TOTAL CONNECTED KVA: -- | -- | -- (A B C)

MINIMUM INTERRUPTING CAPACITY: 10,000 AMPS SYMMETRICAL

**SPARE PANEL; PANEL IS FOR FUTURE USER LOADS.

120/208 VOLT 3ø 4W
225 AMP MAIN LUG ONLY

CIRCUIT BREAKER PANEL SCHEDULE
NEW PANEL LSP1

SURFACE MOUNTED

CKT	LOAD DESCRIPTION	BREAKER POLE	BREAKER AMP	KVA/PHASE A	KVA/PHASE B	KVA/PHASE C	KVA/PHASE A	KVA/PHASE B	KVA/PHASE C	BREAKER AMP	BREAKER POLE	LOAD DESCRIPTION	CKT
1	SPARE	1	20							20	1	SPARE	2
3	SPARE	1	20							20	1	SPARE	4
5	SPARE	1	20							20	1	SPARE	6
7	SPARE	1	20							20	1	SPARE	8
9	SPARE	1	20							20	1	SPARE	10
11	SPARE	1	20							20	1	SPARE	12
13	SPARE	1	20							20	1	SPARE	14
15	SPARE	1	20							20	1	SPARE	16
17	SPARE	1	20							20	1	SPARE	18
19	SPARE	1	20							20	1	SPARE	20
21	SPARE	1	20							20	1	SPARE	22
23	SPARE	1	20							20	1	SPARE	24
25	SPACE ONLY	–	--							--	–	SPACE ONLY	26
27	SPACE ONLY	–	--							--	–	SPACE ONLY	28
29	SPACE ONLY	–	--							--	–	SPACE ONLY	30
31	SPACE ONLY	–	--							--	–	SPACE ONLY	32
33	SPACE ONLY	–	--							--	–	SPACE ONLY	34
35	SPACE ONLY	–	--							--	–	SPACE ONLY	36
37	SPACE ONLY	–	--										38
39	SPACE ONLY	–	--							30	3	SURGE SUPPRESSOR	40
41	SPACE ONLY	–	--										42

TOTAL CONNECTED KVA: -- | -- | -- (A B C)

MINIMUM INTERRUPTING CAPACITY: 10,000 AMPS SYMMETRICAL

**SPARE PANEL; PANEL IS FOR FUTURE USER LOADS.

120/208 VOLT 3ø 4W
225 AMP MAIN LUG ONLY

CIRCUIT BREAKER PANEL SCHEDULE
NEW PANEL LSP2

SURFACE MOUNTED

CKT	LOAD DESCRIPTION	BREAKER POLE	BREAKER AMP	KVA/PHASE A	KVA/PHASE B	KVA/PHASE C	KVA/PHASE A	KVA/PHASE B	KVA/PHASE C	BREAKER AMP	BREAKER POLE	LOAD DESCRIPTION	CKT
1	SPARE	1	20							20	1	SPARE	2
3	SPARE	1	20							20	1	SPARE	4
5	SPARE	1	20							20	1	SPARE	6
7	SPARE	1	20							20	1	SPARE	8
9	SPARE	1	20							20	1	SPARE	10
11	SPARE	1	20							20	1	SPARE	12
13	SPARE	1	20							20	1	SPARE	14
15	SPARE	1	20							20	1	SPARE	16
17	SPARE	1	20							20	1	SPARE	18
19	SPARE	1	20							20	1	SPARE	20
21	SPARE	1	20							20	1	SPARE	22
23	SPARE	1	20							20	1	SPARE	24
25	SPACE ONLY	–	--							--	–	SPACE ONLY	26
27	SPACE ONLY	–	--							--	–	SPACE ONLY	28
29	SPACE ONLY	–	--							--	–	SPACE ONLY	30
31	SPACE ONLY	–	--							--	–	SPACE ONLY	32
33	SPACE ONLY	–	--							--	–	SPACE ONLY	34
35	SPACE ONLY	–	--							--	–	SPACE ONLY	36
37	SPACE ONLY	–	--										38
39	SPACE ONLY	–	--							30	3	SURGE SUPPRESSOR	40
41	SPACE ONLY	–	--										42

TOTAL CONNECTED KVA: -- | -- | -- (A B C)

MINIMUM INTERRUPTING CAPACITY: 10,000 AMPS SYMMETRICAL

**SPARE PANEL; PANEL IS FOR FUTURE USER LOADS.

120/208 VOLT 3ø 4W
225 AMP MAIN LUG ONLY

CIRCUIT BREAKER PANEL SCHEDULE
NEW PANEL LSP3

SURFACE MOUNTED

CKT	LOAD DESCRIPTION	BREAKER POLE	BREAKER AMP	KVA/PHASE A	KVA/PHASE B	KVA/PHASE C	KVA/PHASE A	KVA/PHASE B	KVA/PHASE C	BREAKER AMP	BREAKER POLE	LOAD DESCRIPTION	CKT
1	SPARE	1	20							20	1	SPARE	2
3	SPARE	1	20							20	1	SPARE	4
5	SPARE	1	20							20	1	SPARE	6
7	SPARE	1	20							20	1	SPARE	8
9	SPARE	1	20							20	1	SPARE	10
11	SPARE	1	20							20	1	SPARE	12
13	SPARE	1	20							20	1	SPARE	14
15	SPARE	1	20							20	1	SPARE	16
17	SPARE	1	20							20	1	SPARE	18
19	SPARE	1	20							20	1	SPARE	20
21	SPARE	1	20							20	1	SPARE	22
23	SPARE	1	20							20	1	SPARE	24
25	SPACE ONLY	–	--							--	–	SPACE ONLY	26
27	SPACE ONLY	–	--							--	–	SPACE ONLY	28
29	SPACE ONLY	–	--							--	–	SPACE ONLY	30
31	SPACE ONLY	–	--							--	–	SPACE ONLY	32
33	SPACE ONLY	–	--							--	–	SPACE ONLY	34
35	SPACE ONLY	–	--							--	–	SPACE ONLY	36
37	SPACE ONLY	–	--										38
39	SPACE ONLY	–	--							30	3	SURGE SUPPRESSOR	40
41	SPACE ONLY	–	--										42

TOTAL CONNECTED KVA: -- | -- | -- (A B C)

MINIMUM INTERRUPTING CAPACITY: 10,000 AMPS SYMMETRICAL

**SPARE PANEL; PANEL IS FOR FUTURE USER LOADS.

120/208 VOLT 3ø 4W
225 AMP MAIN LUG ONLY

CIRCUIT BREAKER PANEL SCHEDULE
NEW PANEL LSP4

SURFACE MOUNTED

CKT	LOAD DESCRIPTION	BREAKER POLE	BREAKER AMP	KVA/PHASE A	KVA/PHASE B	KVA/PHASE C	KVA/PHASE A	KVA/PHASE B	KVA/PHASE C	BREAKER AMP	BREAKER POLE	LOAD DESCRIPTION	CKT
1	SPARE	1	20							20	1	SPARE	2
3	SPARE	1	20							20	1	SPARE	4
5	SPARE	1	20							20	1	SPARE	6
7	SPARE	1	20							20	1	SPARE	8
9	SPARE	1	20							20	1	SPARE	10
11	SPARE	1	20							20	1	SPARE	12
13	SPARE	1	20							20	1	SPARE	14
15	SPARE	1	20							20	1	SPARE	16
17	SPARE	1	20							20	1	SPARE	18
19	SPARE	1	20							20	1	SPARE	20
21	SPARE	1	20							20	1	SPARE	22
23	SPARE	1	20							20	1	SPARE	24
25	SPACE ONLY	–	--							--	–	SPACE ONLY	26
27	SPACE ONLY	–	--							--	–	SPACE ONLY	28
29	SPACE ONLY	–	--							--	–	SPACE ONLY	30
31	SPACE ONLY	–	--							--	–	SPACE ONLY	32
33	SPACE ONLY	–	--							--	–	SPACE ONLY	34
35	SPACE ONLY	–	--							--	–	SPACE ONLY	36
37	SPACE ONLY	–	--										38
39	SPACE ONLY	–	--							30	3	SURGE SUPPRESSOR	40
41	SPACE ONLY	–	--										42

TOTAL CONNECTED KVA: -- | -- | -- (A B C)

MINIMUM INTERRUPTING CAPACITY: 10,000 AMPS SYMMETRICAL

**SPARE PANEL; PANEL IS FOR FUTURE USER LOADS.

INPUT: 480 VOLT, 1ø, 3W
SECONDARY: 120/240 VOLT, 1ø, 3W
30 AMP MAIN BREAKER

CIRCUIT BREAKER PANEL SCHEDULE
NEW PANEL EP

SURFACE MOUNTED

CKT	LOAD DESCRIPTION	BREAKER POLE	BREAKER AMP	LOAD KVA		BREAKER AMP	BREAKER POLE	LOAD DESCRIPTION	CKT
1	FIRE ALARM CONTROL PANEL	1	20①	.5	.5	20①	1	FOAM SUPPRESSION CONTROL PANEL	2
3	BLUE BEACONS	1	20	.1	.5	20	1	TEXT SIGNS	4
5	SPARE	1	20			20	1	SPARE	6
7	SPARE	1	20			20	2	SURGE SUPPRESSOR	8
9	SPARE	1	20						10

TOTAL CONNECTED LOAD: 1.6 KVA
MINIMUM INTERRUPTING CAPACITY: 10,000 AMPS SYMMETRICAL

① PROVIDE HANDLE LOCK ON BREAKER

277/480 VOLT 3ø 4W
100 AMP MAIN BREAKER

CIRCUIT BREAKER PANEL SCHEDULE
NEW PANEL PH

SURFACE MOUNTED

CKT	LOAD DESCRIPTION	BREAKER POLE	BREAKER AMP	KVA/PHASE A	KVA/PHASE B	KVA/PHASE C	KVA/PHASE A	KVA/PHASE B	KVA/PHASE C	BREAKER AMP	BREAKER POLE	LOAD DESCRIPTION	CKT
1	PUMPHOUSE LIGHTING	1	20	.54						20	1	SPARE	2
3	SPARE	1	20		.7					20	1	SPARE	4
5	SPARE	1	20							20	1	SPARE	6
7	SPARE	1	20							20	1	SPARE	8
9	SPARE	1	20							20	1	SPARE	10
11	SPARE	1	20							20	1	SPARE	12
13	SPACE ONLY	–	--							--	–	SPACE ONLY	14
15	SPACE ONLY	–	--							--	–	SPACE ONLY	16
17	SPACE ONLY	–	--							--	–	SPACE ONLY	18
19				1.67						--	–	SPACE ONLY	20
21	WALL HEATER	3	20		1.67					--	–	SPACE ONLY	22
23						1.67				--	–	SPACE ONLY	24
25				.86									26
27	PANEL PL VIA TRANSFORMER	3	50							30	3	SURGE SUPPRESSOR	28
29													30

TOTAL CONNECTED KVA: 3.07 | 2.37 | 1.67 (A B C)

MINIMUM INTERRUPTING CAPACITY: 22,000 AMPS SYMMETRICAL

120/208 VOLT 3ø 4W
100 AMP MAIN BREAKER

CIRCUIT BREAKER PANEL SCHEDULE
NEW PANEL PL

SURFACE MOUNTED

CKT	LOAD DESCRIPTION	BREAKER POLE	BREAKER AMP	KVA/PHASE A	KVA/PHASE B	KVA/PHASE C	KVA/PHASE A	KVA/PHASE B	KVA/PHASE C	BREAKER AMP	BREAKER POLE	LOAD DESCRIPTION	CKT
1	REC-PUMPHOUSE	1	20	.36			.5			20①	1	FIRE ALARM CONTROL PANEL	2
3	SWP-1	1	15		.7					20	1	SPARE	4
5	SPARE	1	20							20	1	SPARE	6
7	SPARE	1	20							20	1	SPARE	8
9	SPARE	1	20							20	1	SPARE	10
11	SPARE	1	20							20	1	SPARE	12
13	SPACE ONLY	–	--							--	–	SPACE ONLY	14
15	SPACE ONLY	–	--							--	–	SPACE ONLY	16
17	SPACE ONLY	–	--							--	–	SPACE ONLY	18
19	SPACE ONLY	–	--							--	–	SPACE ONLY	20
21	SPACE ONLY	–	--							--	–	SPACE ONLY	22
23	SPACE ONLY	–	--							--	–	SPACE ONLY	24
25	SPACE ONLY	–	--										26
27	SPACE ONLY	–	--							30	3	SURGE SUPPRESSOR	28
29	SPACE ONLY	–	--										30

TOTAL CONNECTED KVA: .86 | .7 | – (A B C)

① PROVIDE HANDLE LOCK ON BREAKER

MINIMUM INTERRUPTING CAPACITY: 10,000 AMPS SYMMETRICAL

14TH CIVIL ENGINEER SQ
BEST SERVING THE BEST

Symbol No.	Description	Date	Approved

REVISIONS

Designed By: D. COLEMAN
Drawn By: D. COLEMAN
Checked By: D. BAGWELL
Reviewed By: D. BAGWELL
Date: 06 SEPT 2017
File No. -
CADD File Name: -
Solicitation Number: EEPZ 10-1001

COLUMBUS
AIR FORCE BASE

HEFFERNAN HOLLAND MORGAN
ARCHITECTURE
312 S. ALCANIZ ST. • PENSACOLA, FL 32502
850.433.2799 • AA0001948 • HHMA.COM

REPAIR MAINTENANCE
HANGAR 456

PANEL SCHEDULES

DAVID M. BAGWELL LICENSE No. 59251 STATE OF FLORIDA PROFESSIONAL ENGINEER
3/16/17

BAGWELL ENGINEERING, INC
216 E. Government St. Pensacola, FL 32502
Phone: (850) 462-8040
FL Authorization No. 30167
FL PE No. 59251
Job Number: 14-096

Sheet
E-601

ISSUED FOR CONSTRUCTION