PROJECT TEAM

OWNER

PAE APPLIED TECHNOLOGIES LLC
BLDG 4705
508 L STREET
KEESLER AFB, MS 39534
P: 228-377-3313
CONTACT:
ANDREW MARASCA, ARCHITECT
ENGINEERING SERVICES SUPERVISOR
andrew.marasca@ctr@us.af.mil

ARCHITECT

LPK ARCHITECTS, P.A.
MISSISSIPPI GULF COAST OFFICE
2501 14TH ST, SUITE 202
GULFPORT, MS 39501
P: 228-382-3122
F: 601-639-8640
C: 228-697-4841
CONTACT:
JOHN K. OLSEN JR., AIA, PRINCIPAL ARCHITECT
jolsen@lpkarchitects.com

CIVIL

GULF STATES ENGINEERING
1816 PASS RD
GULFPORT, MS 39501
P: 251-459-6413
F: 228-864-7744
CONTACT:
TRAVIS KEEDY, P.E.
travis.keedy@gseeng.com

STRUCTURAL ENGINEER

GULF STATES ENGINEERING
1816 PASS RD
GULFPORT, MS 39501
P: 228-864-5050
F: 228-864-7744
CONTACT:
LANE SESI, PRINCIPAL
lane.sesi@gseeng.com

PLUMBING, MECHANICAL, ELECTRICAL AND FIRE PROTECTION ENGINEER

GULF STATES ENGINEERING
1816 PASS RD
GULFPORT, MS 39501
P: 251-459-6414
F: 228-864-7744
CONTACT:
ARUN VARGHESE, P.E.
arun.varghese@gseeng.com

DRAWING INDEX

1.	T-001	TITLE SHEET
2.	LS-101	LIFE SAFETY PLAN
3.	C-100	EXISTING CONDITIONS, DEMOLITION AND EROSION & SEDIMENT CONTROL PLAN
4.	C-101	CIVIL SITE PLAN
5.	C-102	PAVING, GRADING AND DRAINAGE PLAN
6.	C-103	SITE UTILITY PLAN
7.	C-104	CIVIL DETAILS SHEET 1 OF 2
8.	C-105	CIVIL DETAILS SHEET 2 OF 2
9.	S-001	STRUCTURAL NOTES
10.	S-101	FOUNDATION PLAN, SECTIONS & DETAILS
11.	A-101	FLOOR PLAN, ROOF PLAN AND FINISH SCHEDULE
12.	A-102	EQUIPMENT PLAN AND REFLECTED CEILING PLAN
13.	A-201	ELEVATIONS
14.	A-301	BUILDING SECTIONS AND WALL SECTION
15.	A-501	OPENING SCHEDULE, FRAME TYPES, DOOR TYPES, ENLARGED TOILET PLANS AND TOILET ELEVATIONS
16.	A-601	OPENING DETAILS
17.	P-001	PLUMBING NOTES, LEGENDS & SCHEDULES
18.	P-101	PLUMBING PLAN
19.	P-102	SANITARY PLAN
20.	P-501	PLUMBING DETAILS
21.	M-001	MECHANICAL NOTES, SYMBOLS & LEGENDS
22.	M-101	MECHANICAL PLAN
23.	M-501	MECHANICAL DETAILS
24.	UE-001	SITE ELECTRICAL PLAN
25.	E-001	ELECTRICAL NOTES, LEGENDS & SCHEDULES
26.	E-002	COMMUNICATIONS LEGEND & SPECS
27.	E-101	POWER PLAN
28.	E-102	LIGHTING PLAN
29.	E-103	COMMUNICATIONS PLANS
30.	E-601	PANEL SCHEDULES
31.	E-701	LIGHTNING PROTECTION PLAN
32.	FX-101	FIRE HAZARD PLAN
33.	FX-111	FIRE SPRINKLER PLAN
34.	FA-101	FIRE ALARM PLAN

PAE APPLIED TECHNOLOGIES LLC

MAHG179002 WAREHOUSE/ OFFICES FOR 36 AES

HANGAR RD AND PHANTOM DR
KEESLER AFB, MS 39534

CONSTRUCTION DOCUMENTS
NOVEMBER 10, 2017

LOCATION MAP
NOT TO SCALE

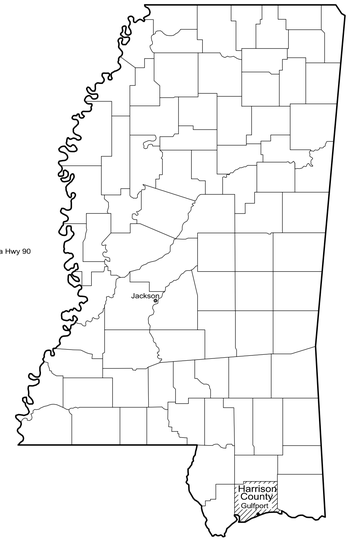

VICINITY MAP
NOT TO SCALE

ARCHITECTURAL NOTES

1. CONTRACTOR SHALL VISIT THE SITE AND THOROUGHLY FAMILIARIZE HIMSELF WITH ALL EXISTING CONDITIONS, INCLUDING EXISTING UTILITY LOCATIONS, TO DETERMINE THE SCOPE AND NATURE OF THE WORK NECESSARY FOR THE COMPLETION OF THE PROJECT.
2. THE CONTRACTOR SHALL CAREFULLY REVIEW ALL DRAWINGS, SPECIFICATIONS AND ANY ADDENDUM FOR THE PROJECT TO DETERMINE THE COMPLETE SCOPE AND NATURE OF THE WORK TO BE PERFORMED. ANY QUESTIONS OR DISCREPANCIES AS TO THE NATURE OR INTENT OF THE WORK TO BE PERFORMED SHALL BE DIRECTED TO THE CONTRACTING OFFICER PRIOR TO BIDDING FOR A DETERMINATION OF WORK REQUIRED. UNLESS STATED OTHERWISE BY THE CONTRACTING OFFICER, WHERE A CONFLICT OR DISCREPANCY EXISTS, THE MOST COSTLY OR MOST STRINGENT CONDITION SHALL APPLY.
3. CONTRACTOR SHALL COORDINATE THE WORK SCHEDULE AND INTERRUPTION OF UTILITIES FOR THE PROJECT WITH THE OWNER TO MINIMIZE DISRUPTION OF ACTIVITIES AND FUNCTIONS.
4. THE CONTRACTOR SHALL EXERCISE CARE AND TAKE APPROPRIATE PRECAUTIONARY MEASURES TO PREVENT ANY DAMAGE TO THE EXISTING STRUCTURES, SIDEWALKS, UTILITIES, COMMUNICATIONS, ETC., DURING THE PROJECT. THE CONTRACTOR SHALL CORRECT ALL DAMAGE CAUSED BY OR DURING THE PROJECT. CONTRACTOR SHALL BE RESPONSIBLE FOR CONTACTING ANY REQUIRED AGENCIES OR UTILITIES AND FOLLOWING APPLICABLE PROCEDURES PRIOR TO ANY EXCAVATION.
5. CONTRACTOR SHALL FIELD VERIFY ALL DIMENSIONS AND EXISTING CONDITIONS PRIOR TO ORDERING MATERIALS AND COMMENCING WORK.
6. THE CONTRACTOR SHALL INSURE THAT HIS EQUIPMENT AND MATERIALS ARE STORED IN A SAFE AND SECURE MANNER AT AREAS DESIGNATED BY THE OWNER, AND SHALL INSURE THAT ALL WORK BE PERFORMED IN ACCORDANCE WITH SAFETY REGULATIONS AND SAFE STANDARDS OF PRACTICE FOR THE SAFETY OF THE WORKERS AND USERS OF THE BUILDING DURING THE PROJECT.
7. NOT EVERY CONDITION HAS BEEN DETAILED. WHERE SPECIFIC DETAILING IS NOT SHOWN, CONTACT CONTRACTING OFFICER FOR INSTRUCTIONS. THEN, EXECUTE THE CONSTRUCTION IN A SOUND, WORKMANLIKE MANNER CONSISTENT WITH ACCEPTED BUILDING PRACTICES AND OTHER DETAILING SHOWN.
8. WHERE STANDARD DETAILS ARE SHOWN TO BE TYPICAL, THEY SHALL BE CONSIDERED TO BE APPLICABLE IN ALL SIMILAR CONDITIONS UNLESS OTHERWISE NOTED.
9. ALL WORK SHALL BE IN ACCORDANCE WITH THE REQUIREMENTS OF THE AMERICANS WITH DISABILITIES ACT AND APPLICABLE BUILDING CODES, FIRE CODES AND REGULATIONS.
10. ALL WORK AREAS SHALL BE LEFT CLEAN & PRESENTABLE UPON COMPLETION OF THE WORK DAY. DAILY CLEANUP REQUIRED IN AREAS OF DAILY ACTIVITY. CONTRACTOR SHALL REMOVE ALL TRASH AND DEBRIS FROM THE PROJECT SITE AS NEEDED AND SHALL PERFORM FINAL CLEANUP UPON COMPLETION OF THE PROJECT.

LPK
ARCHITECTS, P.A.
ARCHITECTURE • INTERIOR DESIGN
PLANNING • CONSTRUCTION MANAGEMENT

www.GSEeng.com
GSE
CONSULTING ENGINEERS

ARCHITECTURAL ABBREVIATIONS

ACT	ACOUSTICAL CEILING TILE
ADD'M.	ADDENDUM
A.F.F.	ABOVE FINISHED FLOOR
ALUM.	ALUMINUM
ANOD.	ANODIZED
ARCH.	ARCHITECTURAL
BD.	BOARD
BLKG.	BLOCKING
BLDG.	BUILDING
CER.	CERAMIC
CMU	CONCRETE MASONRY UNIT
COL.	COLUMN
CONC.	CONCRETE
C.J.	CONSTRUCTION JOINT
CONST.	CONSTRUCTION
CONT.	CONTINUOUS
DET.	DETAIL
DWGS.	DRAWINGS
EA.	EACH
E.J.	EXPANSION JOINT
ELEC.	ELECTRICAL
ELEV.	ELEVATION
EQ.	EQUAL
E.W.	EACH WAY
E.W.C.	ELECTRIC WATER COOLER
EXIST.	EXISTING
EXP.	EXPANSION
EXT.	EXTERIOR
FD	FLOOR DRAIN
FE	FIRE EXTINGUISHER
FEC	FIRE EXTINGUISHER CABINET
FIN.	FINISHED
FL.	FLOOR
GA.	GAUGE
GALV.	GALVANIZED
GB	GRAB BAR
GYP.	GYPSUM
H	HEAD
HCWD	HOLLOW CORE WOOD DOOR
H.M.	HOLLOW METAL
HORIZ.	HORIZONTAL
HT.	HEIGHT
HVAC	HEATING, VENTILATION AND AIR CONDITIONING
INSUL.	INSULATION
INT.	INTERIOR
J	JAMB
JT.	JOINT
LBS	POUNDS
LAM.	LAMINATE OR LAMINATED
MAX.	MAXIMUM
MECH.	MECHANICAL
MIN.	MINIMUM
M.O.	MASONRY OPENING
MTD.	MOUNTED
N.I.C.	NOT IN CONTRACT
NO.	NUMBER
NOM.	NOMINAL
O.C.	ON CENTER
O.D.	OUTSIDE DIAMETER
P.	PLASTIC
PARA	PARAGRAPH
PART.	PARTITION
PL	PLATE OR PLATED
PLY'D	PLYWOOD
PSF	POUNDS PER SQUARE FOOT
PSI	POUNDS PER SQUARE INCH
PTD	PAINTED
PTDD	PAPER TOWEL DISPENSER AND/OR DISPOSAL
PVC	POLYVINYL CHLORIDE
R	RADIUS
R.A.G.	RETURN AIR GRILLE
RB	RUBBER BASE
REF	REFRIGERATOR
REINF	REINFORCING
REQ'D	REQUIRED
RT	RUBBER THRESHOLD
S	SILL
SCWD	SOLID CORE WOOD DOOR
SHT	SHEET
SIM.	SIMILAR
SQFT.	SQUARE FEET
S.S.	STAINLESS STEEL
STR.	STRUCTURAL
SUP	SUPPLEMENTAL
SUSP.	SUSPENDED
THKNS	THICKNESS
TPH	TOILET PAPER HOLDER
TRTD.	TREATED
TYP.	TYPICAL
VCT	VINYL COMPOSITION TILE
VERT.	VERTICAL
VWC	VINYL WALL COVERING
W/	WITH
WD.	WOOD
WT.	WEIGHT

ARCHITECTURAL SYMBOLS

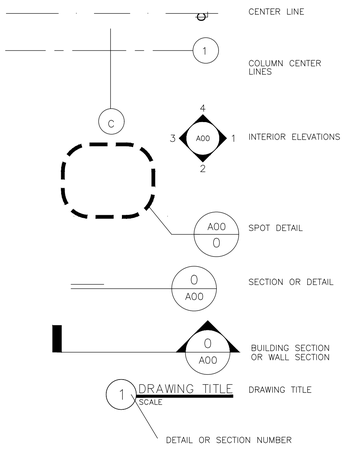

'	FEET
"	INCHES
#	POUNDS OR NUMBER
ø	ROUND
◫	SQUARE
℄	CHANNEL
@	AT
&	AND
<	ANGLE
A	EXTERIOR WINDOW
	DOOR NUMBER
BUILDING NUMBER IF APPLICABLE / NAME / XXXX	ROOM NUMBER
FLOOR LEVEL	
	ARCHITECTURAL NOTE
108.56'	EXISTING SPOT GRADE
338.50'	FINISH GRADE – AS INDICATED ON DRAWINGS
408.56'	VERTICAL ELEVATION
BENCH MARK 232.25'	BENCHMARK – AS INDICATED ON DRAWINGS

LPK ARCHITECTS, P.A.
2208 18TH ST, SUITE D
GULFPORT, MISSISSIPPI 39501
P.O. BOX 7117
GULFPORT, MISSISSIPPI 39506
P: 228.382.3122
F: 601.693.8640

These documents are the sole property of LPK Architects P.A. and are not to reused. Any alterations, revisions or reuse of these documents without the written consent of LPK Architects will result in all sureties and responsibilities for the entire project becoming null and void.
copyright LPK Architects, P.A.

www.GSEeng.com
GSE
CONSULTING ENGINEERS
Gulfport Mobile Nashville
1816 Pass Rd. Gulfport, MS 39501
(T)228-864-5050 (F)228-864-7744

PROFESSIONAL SEAL:

REVISION	DATE		DRAWN	APPROVED

UNITED STATES AIR FORCE — AIR EDUCATION AND TRAINING COMMAND

KEESLER AIR FORCE BASE
BILOXI — MISSISSIPPI
OFFICE OF CIVIL ENGINEERS

36 AES WAREHOUSE/OFFICE

TITLE SHEET

SUBMITTED: (Chief of Contracts Design) D. KINMAN		RECOMMENDED: (Chief of Engineering) A. MARASCA	FACILITY NUMBER: XX.X
DESIGNED: JKO	CHECKED: JKO	SCALE: VARIES	DRAWING NUMBER: T-001
DRAWN: JKO	DATE: 10-10-17	PROJECT NUMBER: MAHG 17-9002	SHEET X OF X

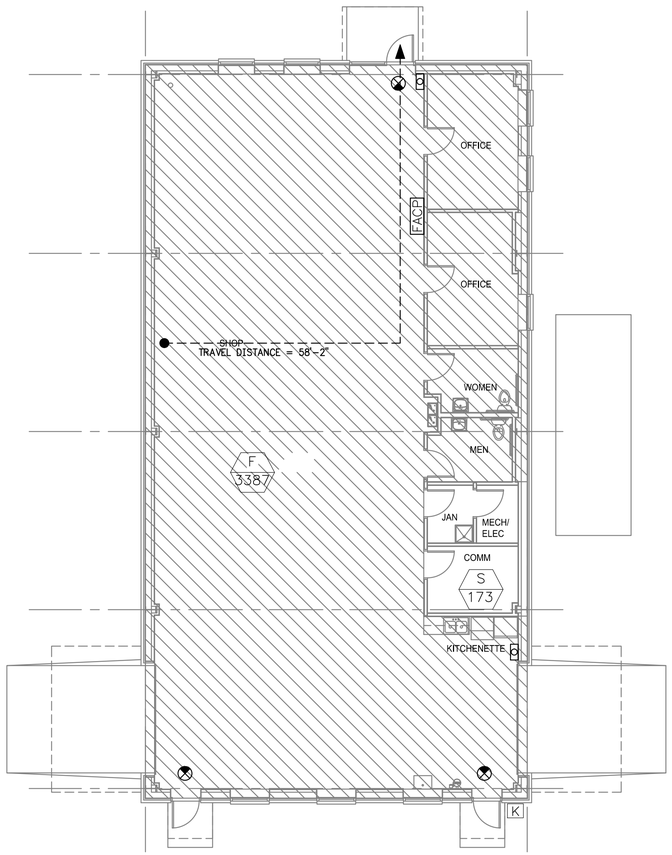

1 FIRE ALARM PLAN
SCALE: 1/8" = 1'-0"

OCCUPANCY LEGEND

STORAGE
OCCUPANT LOAD OF 300 SF/PERSON

FACTORY/INDUSTRIAL
OCCUPANT LOAD OF 100 SF/PERSON

OCCUPANCY
FLOOR AREA (S.F.)

LIFE SAFETY LEGEND

FIRE EXTINGUISHER CABINET, LARSEN 2409-5R W/ MP5-A 5LB MULTI-PURPOSE DRY CHEMICAL EXTINGUISHER (UL 3A-40B:C)

PATH OF EGRESS TRAVEL

EXIT SIGN

DUAL-FACED EXIT SIGN WITH DIRECTION OF TRAVEL INDICATED

SEE ELECTRICAL — EMERGENCY LIGHTING

K — KNOX BOX

FACP — FIRE ALARM/EVAX CONTROL PANEL

BUILDING CODES AND INFORMATION

- UFC 3-600-01, Fire Protection Engineering for Facilities, Change 1, 28 Nov 2016
- UFC 1-200-01, General Building Requirements, June 20, 2016
- UFC 3-310-04 Seismic Design for Buildings, Change 1, June 20. 2016
- UFC 4-010-01 DoD Minimum Antiterrorism Standards for Buildings, Change 1, 1 October 2013
- NFPA 10, Standard for Portable Fire Extinguishers, 2013
- NFPA 13, Standard for the Installation of Sprinkler Systems, 2016
- NFPA 24, Standard for the Installation of Private Fire Service Mains and Their Appurtenances, 2016
- NFPA 70, National Electrical Code® 2017
- NFPA 72, National Fire Alarm and Signaling Code,2016
- NFPA 101, Life Safety Code®,2015
- International Building Code. 2015

INTERNATIONAL BUILDING CODE 2015

OCCUPANCY: F-1 MODERATE HAZARD 306.2
CONSTRUCTION TYPE: IIB – T601
BUILDING HEIGHT ALLOWED: 75' – T504.2
ACTUAL: 16'-6"
STORIES ALLOWED: 3 – T504.2
ACTUAL: 1
BUILDING AREA ALLOWED: 62,000 SF – T506.2
ACTUAL: 3,560 SF

BUILDING ELEMENT FIRE RESISTANCE RATING

PRIMARY	– 0 – T601
BEARING WALLS	– 0 – T601
NON-BEARING EXTERIOR WALLS	– 0 – T602, 10' ≤ X ≤ 30'
NON-BEARING INTERIOR WALLS	– 0 – T601
FLOOR	– 0 – T601
ROOF	– 0 – T601

NFPA 101 LIFE SAFETY CODE

OCCUPANCY: GENERAL INDUSTRIAL – 6.1.12.1/40.1.2.1.1
OCCUPANCY LOAD FACTOR: 100 SF/PERSON – T7.3.1.2/40.1.7

BUILDING AREA: 3,560 SF
OCCUPANCY LOAD: 36
MINIMUM EXIT WIDTH, 0.2"/OCCUPANT: 7.2" – T7.3.3.1
ACTUAL: 108"
NUMBER OF EXITS: MINIMUM REQUIRED: 2 – 40.2.4.1.1
ACTUAL: 3
DEAD END CORRIDOR: MAXIMUM LENGTH: 50' – T40.2.5.1
ACTUAL: NO CORRIDORS
COMMON PATH OF TRAVEL: MAXIMUM LENGTH: 100' – T40.2.5.1
ACTUAL: 0'-0"
TRAVEL DISTANCE TO EXIT: MAXIMUM LENGTH: 250' – T40.2.6.1
ACTUAL: 68'-0"
EMERGENCY LIGHTING REQUIRED: YES – 40.2.9.1
EXIT SIGNS REQUIRED: YES – 40.2.10

LPK architects
LPK ARCHITECTS, P.A.
2208 18TH ST, SUITE D
GULFPORT, MISSISSIPPI 39501
P.O. BOX 7117
GULFPORT, MISSISSIPPI 39506
P: 228.382.3122
F: 601.693.8640
These documents are the sole property of LPK Architects P.A. and are not to reused. Any alterations, revisions or reuse of these documents without the written consent of LPK Architects will result in all liabilities and responsibilities for the entire project becoming null and void.
copyright LPK Architects, P.A.

www.GSEeng.com
GSE CONSULTING ENGINEERS
Gulfport Mobile Nashville
1816 Pass Rd. Gulfport, MS 39501
(T)228-864-5050 (F)228-864-7744

PROFESSIONAL SEAL:
JOHN J. WADE REGISTERED PROFESSIONAL ENGINEER 14481 STATE OF MISSISSIPPI
11/10/17

REVISION	DATE		DRAWN	APPROVED

UNITED STATES AIR FORCE — AIR EDUCATION AND TRAINING COMMAND
KEESLER AIR FORCE BASE
BILOXI – MISSISSIPPI
OFFICE OF CIVIL ENGINEERS

36 AES WAREHOUSE/OFFICE

LIFE SAFETY PLAN

SUBMITTED: (Chief of Contracts Design)		RECOMMENDED: (Chief of Engineering)	FACILITY NUMBER:
D. KINMAN		A. MARASCA	XX.X
DESIGNED: BDD	CHECKED: JTW	SCALE: AS NOTED	DRAWING NUMBER: LS-101
DRAWN: JJH	DATE: 10-04-17	PROJECT NUMBER: MAHG 17-9002	SHEET 1 OF 1

LEGEND:

- FW — FIRE WATER LINE
- W — WATER LINE
- SAN — SANITARY SEWER
- FM — SANITARY FORCEMAIN
- UT — UNDERGROUND TEL.
- FO — FIBER OPTIC
- UP — UNDERGROUND POWER
- X — X — CHAIN LINK FENCE
- STORM DRAIN
- 45' — EX. INDEX CONTOUR
- 44' — EX. INTERMEDIATE CONTOUR
- +10.00 EX. SPOT ELEVATION
- 45 INDEX CONTOUR
- 44 INTERMEDIATE CONTOUR
- 48.35 PROPOSED ELEVATION
- SIGN
- E ELECTRICAL BOX
- F FIBER OPTIC BOX
- T TELEPHONE BOX
- W MANHOLE (AS DEFINED)
- UTILITY MARKER (AS DEFINED)
- GAS METER
- GAS VALVE
- WATER METER
- WV WATER VALVE
- FIRE HYDRANT
- STORM DRAINAGE MANHOLE
- DRAINAGE INLET
- S SANITARY MANHOLE
- SANITARY CLEANOUT
- BENCHMARK
- CONCRETE SURFACE
- AGGREGATE SURFACE
- HEAVY DUTY ASPHALT
- STANDARD DUTY ASPHALT
- AREA OF 2" CONCRETE REMOVAL (CHIP OUT)
- FULL DEPTH REMOVAL OF EXISTING SLAB

EROSION CONTROL LEGEND:

- SILT FENCE (SB)
- WATTLE(S)
- ROCK FILTER DAM (RD)
- CONSTRUCTION ENTRANCE
- 215 — EX. INDEX CONTOUR
- 214 — EX. INTERMEDIATE CONTOUR
- INLET PROTECTION (FIP)

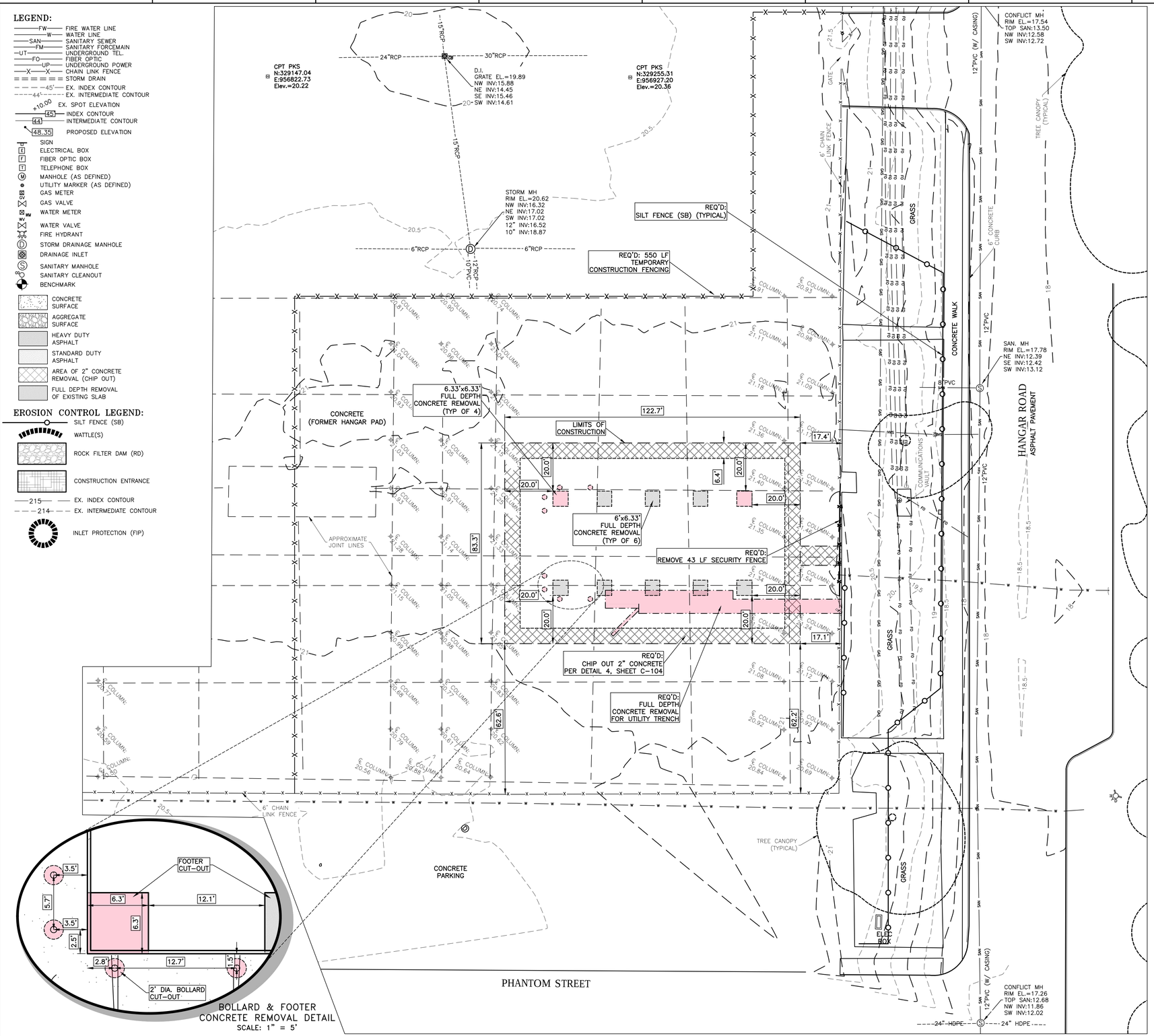

BOLLARD & FOOTER
CONCRETE REMOVAL DETAIL
SCALE: 1" = 5'

0 20 40 Feet

SCALE: 1" = 20'

EROSION CONTROL NOTES:

1. EROSION AND SEDIMENT CONTROL MEASURES SHOWN ARE CONSIDERED TO BE THE MINIMUM ACCEPTABLE MEASURES. THE CONTRACTOR SHALL UTILIZE "BEST MANAGEMENT PRACTICES" AS NECESSARY TO PREVENT SEDIMENT LADEN STORMWATER RUNOFF OR ERODED MATERIALS FROM LEAVING THE CONSTRUCTION SITE. THE CONTRACTOR SHALL MAINTAIN AND REPAIR EROSION CONTROL MEASURES AFTER EACH RAINFALL EVENT AND INSPECT THEM TWICE WEEKLY IN THE EVENT OF NO RAINFALL. BEST MANAGEMENT PRACTICES (BMPS) ARE DEFINED AS: SCHEDULES OF ACTIVITIES, PROHIBITIONS OF PRACTICES, MAINTENANCE PROCEDURES, AND OTHER MANAGEMENT PRACTICES TO PREVENT OR REDUCE THE POLLUTION OF WATERS OF THE UNITED STATES. BMPS ALSO INCLUDE TREATMENT REQUIREMENTS, OPERATING PROCEDURES, AND PRACTICES TO CONTROL SITE RUNOFF, SPILLAGE OR LEAKS, SLUDGE OR WASTE DISPOSAL, OR DRAINAGE FROM RAW MATERIAL STORAGE, WITH REGARD TO CONSTRUCTION THESE MAY INCLUDE STRUCTURAL DEVICES OR NONSTRUCTURAL PRACTICES THAT ARE DESIGNED TO PREVENT POLLUTANTS FROM ENTERING WATER OR TO DIRECT THE FLOW OF WATER.
2. SILT FENCE SHALL BE USED IN AREAS WHERE INDICATED OR AS DIRECTED BY THE ENGINEER.
3. SILT FENCES ARE TEMPORARY SEDIMENT CONTROL ITEMS THAT SHALL BE ERECTED OPPOSITE ERODABLE AREAS SUCH AS NEWLY GRADED FILL SLOPES AND ADJACENT TO STREAMS AND CHANNELS.
4. SILT FENCES SHALL BE IN PLACE PRIOR TO ANY CONSTRUCTION OPERATION. SILT FENCES SHALL BE CLEANED, SILT REMOVED, AND REPAIRED AS NECESSARY AS PART OF REQUIRED BMP MAINTENANCE.
5. AFTER THE CONSTRUCTION AREA IS STABILIZED BY PAVING OR A FIRM STAND OF GRASS AND EROSION ACTIVITY CURTAILED, SILT FENCES SHALL BE REMOVED.
6. STORM DRAIN INLETS SHALL BE PROTECTED FROM SEDIMENT ENTRY WITH SEDIMENT BARRIERS LIKE FABRIC DROP INLET PROTECTION OR WATTLES UNTIL THE SITE IS STABILIZED BY PAVING OR A FIRM STAND OF GRASS IS OBTAINED.
7. CONTRACTOR IS REQUIRED TO STABILIZE DISTURBED AREAS WITH TEMPORARY GRASS OR SOIL STABILIZER IN AREAS THAT WILL NOT BE DISTURBED AGAIN FOR FOURTEEN (14) DAYS OR MORE. THE APPROPRIATE TEMPORARY SEEDING MUST BE IMPLEMENTED WITHIN SEVEN (7) CALENDAR DAYS.
8. THE CONTRACTOR IS HEREBY DIRECTED TO PROVIDE SEDIMENT RUNOFF PROTECTION WHERE NECESSARY TO PREVENT SILT LADEN RUNOFF FROM ENTERING THE STREAMS NEAR THE PROPOSED PROJECT.
9. GRASS GROUND COVER SHALL BE MAINTAINED UPON COMPLETION OF CONSTRUCTION.
10. THE EROSION AND SEDIMENT CONTROL ITEMS SHOWN ON THE PLANS ARE PROVIDED AS A STARTING POINT FOR A COMPREHENSIVE SEDIMENT AND EROSION CONTROL PLAN TO BE IMPLEMENTED THROUGHOUT CONSTRUCTION. THE CONTRACTOR SHALL BE PREPARED TO ANTICIPATE AND ADJUST BEST MANAGEMENT PRACTICES AS NECESSARY THROUGHOUT CONSTRUCTION TO RESTRICT THE AMOUNT OF SILT LADEN RUNOFF LEAVING THE PROJECT.
11. SEDIMENT & EROSION CONTROL ITEMS SHALL BE CONSTRUCTED AND MAINTAINED IN ACCORDANCE WITH THE FOLLOWING HANDBOOKS:
    - MISSISSIPPI HANDBOOK FOR EROSION CONTROL, SEDIMENT CONTROL, AND STORM WATER MANAGEMENT ON CONSTRUCTION SITES AND URBAN AREAS.
    - MISSISSIPPI MANUAL FOR EROSION AND SEDIMENT CONTROL.
    - EPA STORM WATER MANAGEMENT FOR CONSTRUCTION ACTIVITIES.
    - EPA GUIDANCE SPECIFYING MANAGEMENT MEASURES FOR SOURCES OF NON-POINT POLLUTION IN COASTAL WATERS.
    - AASHTO GUIDELINES FOR EROSION AND SEDIMENT CONTROL IN HIGHWAY CONSTRUCTION.

DEMOLITION NOTES:

1. IT IS THE RESPONSIBILITY OF THE CONTRACTOR TO CONTACT THE MISSISSIPPI ONE CALL SERVICE FOR UNDERGROUND UTILITY DESIGNATIONS PRIOR TO CONSTRUCTION, ALL EXISTING UNDERGROUND UTILITIES SHOWN HEREON ARE FOR REFERENCE PURPOSES ONLY, THE ENGINEER OF RECORD MAKES NO GUARANTEE OF ACCURACY OF SAID UTILITY LINES.
2. THE CONTRACTOR SHALL DISPOSE OF ALL CONSTRUCTION DEBRIS IN A MANNER COMPLIANT WITH ALL FEDERAL, STATE AND LOCAL CODES. NO CONSTRUCTION DEBRIS WILL BE STOCKPILED ON THE PROJECT SITE OR ADJACENT SITES.
3. VEHICULAR ACCESS TO EXISTING BUILDINGS SHALL BE MAINTAINED AT ALL TIMES DURING CONSTRUCTION.
4. THE CONTRACTOR SHALL CONSULT THE STRUCTURAL PLANS FOR VERIFICATION OF FOOTER PLACEMENT AND IT'S ASSOCIATED CONCRETE REMOVAL

LAND DISTURBANCE:

0.37 ACRES (16,000 S.F.)

CONSTRUCTION PHASE SEQUENCE:

PHASE ONE
- CLEAR AREAS REQUIRED FOR SILT FENCE PLACEMENT
- INSTALL SILT FENCE

PHASE TWO
- GRADE TO ROUGH GRADES

PHASE THREE
- CONSTRUCT UTILITIES (WATER, SEWER, STORM DRAINS, GAS, COMMUNICATIONS AND ELECTRIC)

PHASE FOUR
- CONSTRUCT PAVING & SIDEWALKS
- CONSTRUCT BUILDING

PHASE FIVE
- STABILIZE DISTURBED AREAS

PHASE SIX
- REMOVE BMP MEASURES

SPECIAL NOTE DUE TO PROXIMITY OF FLIGHT-LINE:

THE CONTRACTOR SHALL SWEEP SITE OF LOOSE DEBRIS DAILY. THE DUMPSTER SHALL BE REMOVED WITHIN 24 HOURS OF REACHING THE TOP. THE CONTRACTOR IS TO PERFORM A FINAL SWEEP AND WALK WITH A MAGNET TO REMOVE ALL DEBRIS FROM THE SITE UPON COMPLETION.

LPK architects

LPK ARCHITECTS, P.A.
2208 18TH ST., SUITE D
GULFPORT, MISSISSIPPI 39501
P.O. BOX 7117
GULFPORT, MISSISSIPPI 39506
P: 228.382.3122
F: 601.693.8640

These documents are the sole property of LPK Architects P.A. and are not to reused. Any alterations, revisions or reuse of these documents without the written consent of LPK Architects will result in all sureties and responsibilities for the entire project becoming null and void.

copyright LPK Architects, P.A.

www.GSEeng.com
GSE
CONSULTING ENGINEERS
Gulfport Mobile Nashville
1816 Pass Rd. Gulfport, MS 39501
(T)228-864-5050 (F)228-864-7744

PROFESSIONAL SEAL:

STEPHANIE A. GROVES
LICENSED PROFESSIONAL
ENGINEER
STATE OF MISSISSIPPI
11461
PE

REVISION	DATE	DRAWN	APPROVED

UNITED STATES AIR FORCE — AIR EDUCATION AND TRAINING COMMAND

KEESLER AIR FORCE BASE
BILOXI — MISSISSIPPI
OFFICE OF CIVIL ENGINEERS

36 AES WAREHOUSE/OFFICE

EXISTING CONDITIONS, DEMOLITION AND EROSION & SEDIMENT CONTROL PLAN

SUBMITTED: (Chief of Contracts Design)		RECOMMENDED: (Chief of Engineering)	FACILITY NUMBER:
D. KINMAN		A. MARASCA	XX.X
DESIGNED: THK	CHECKED: SAG	SCALE: 1" = 20'	DRAWING NUMBER: C-100
DRAWN: THK	DATE: 10-04-17	PROJECT NUMBER: MAHG 17-9002	SHEET ____ OF ____

LEGEND:

- FW — FIRE WATER LINE
- W — WATER LINE
- SAN — SANITARY SEWER
- FM — SANITARY FORCEMAIN
- UT — UNDERGROUND TEL.
- FO — FIBER OPTIC
- UP — UNDERGROUND POWER
- X — CHAIN LINK FENCE
- STORM DRAIN
- 45' — EX. INDEX CONTOUR
- 44' — EX. INTERMEDIATE CONTOUR
- +10.00 — EX. SPOT ELEVATION
- 45' — INDEX CONTOUR
- 44 — INTERMEDIATE CONTOUR
- 48.35 — PROPOSED ELEVATION
- SIGN
- E — ELECTRICAL BOX
- F — FIBER OPTIC BOX
- T — TELEPHONE BOX
- M — MANHOLE (AS DEFINED)
- UTILITY MARKER (AS DEFINED)
- GAS METER
- GAS VALVE
- WM — WATER METER
- WV — WATER VALVE
- FIRE HYDRANT
- D — STORM DRAINAGE MANHOLE
- DRAINAGE INLET
- S — SANITARY MANHOLE
- SANITARY CLEANOUT
- BENCHMARK
- CONCRETE SURFACE
- AGGREGATE SURFACE
- HEAVY DUTY ASPHALT
- STANDARD DUTY ASPHALT
- AREA OF 2" CONCRETE REMOVAL (CHIP OUT)
- FULL DEPTH REMOVAL OF EXISTING SLAB

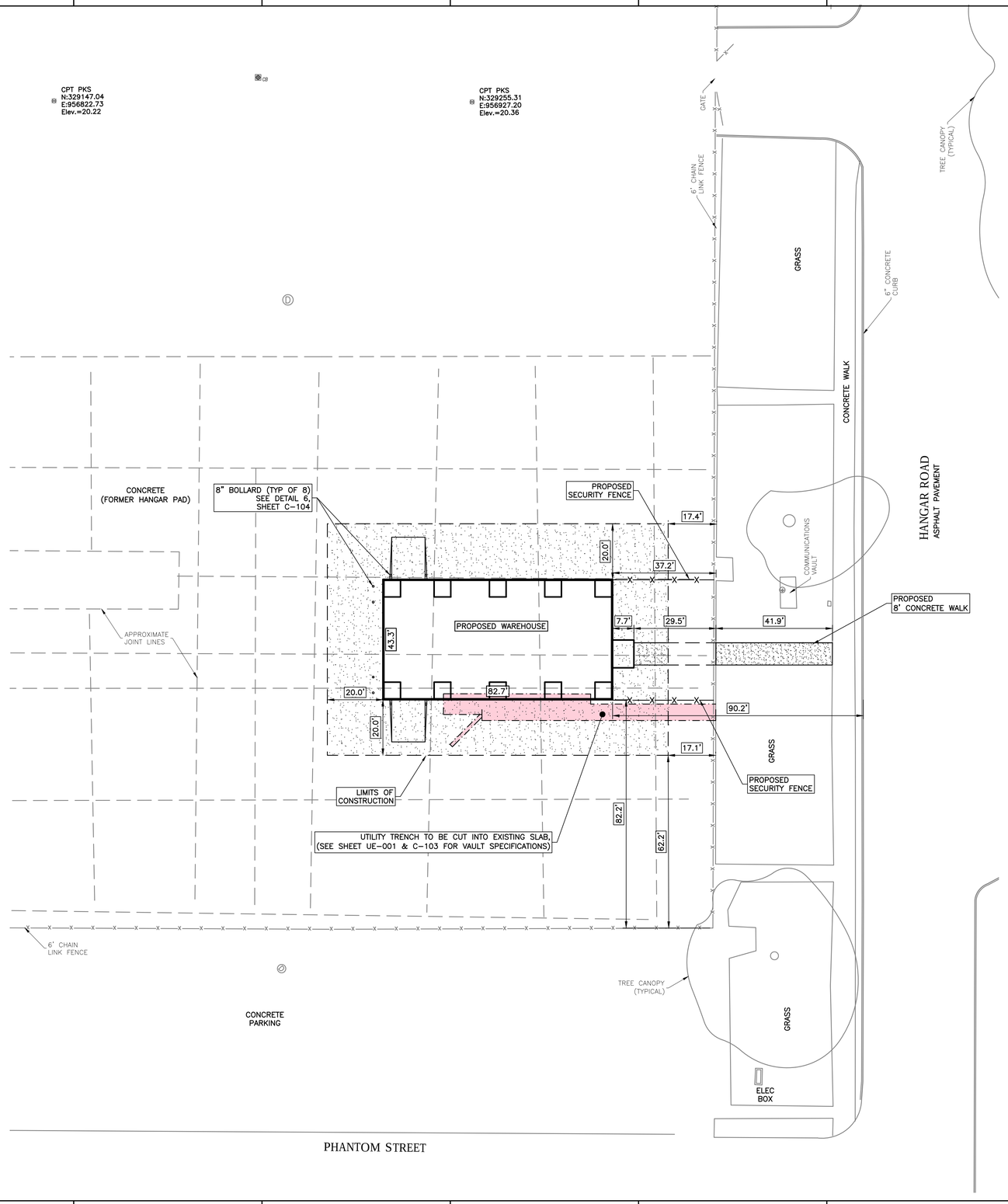

SCALE: 1" = 20'

VICINITY MAP

DESCRIPTION:
A PORTION OF KEESLER AIR FORCE BASE, BILOXI, MISSISSIPPI

FLOOD ZONE:
THE SURVEYED AREA LIES WITHIN FLOOD ZONE X (UNSHADED), ACCORDING TO FEMA FLOOD INSURANCE RATE MAP PANEL No. 28047C0293G, DATED 6/16/09. ZONE X IS DETERMINED TO BE OUTSIDE THE 0.2% ANNUAL CHANCE FLOODPLAIN.

LAND DISTURBANCE:
TOTAL DISTURBED ACREAGE: 0.37± ACRES

LPK architects

LPK ARCHITECTS, P.A.
2208 18TH ST, SUITE D
GULFPORT, MISSISSIPPI 39501
P.O. BOX 7117
GULFPORT, MISSISSIPPI 39506
P: 228.382.3122
F: 601.693.8640

These documents are the sole property of LPK Architects P.A. and are not to reused. Any alterations, revisions or reuse of these documents without the written consent of LPK Architects will result in all sureties and responsibilities for the entire project becoming null and void.

copyright LPK Architects, P.A.

www.GSEeng.com
GSE
CONSULTING ENGINEERS
Gulfport Mobile Nashville
1816 Pass Rd. Gulfport, MS 39501
(T)228-864-5050 (F)228-864-7744

PROFESSIONAL SEAL:

REVISION	DATE		DRAWN	APPROVED

UNITED STATES AIR FORCE — AIR EDUCATION AND TRAINING COMMAND

KEESLER AIR FORCE BASE
BILOXI — MISSISSIPPI
OFFICE OF CIVIL ENGINEERS

36 AES WAREHOUSE/OFFICE

CIVIL SITE PLAN

SUBMITTED: (Chief of Contracts Design)		RECOMMENDED: (Chief of Engineering)	FACILITY NUMBER:
D. KINMAN		A. MARASCA	XX.X
DESIGNED: THK	CHECKED: SAG	SCALE: 1" = 20'	DRAWING NUMBER: C-101
DRAWN: THK	DATE: 10-04-17	PROJECT NUMBER: MAHG 17-9002	SHEET ____ OF ____

LEGEND:

- FW — FIRE WATER LINE
- W — WATER LINE
- SAN — SANITARY SEWER
- FM — SANITARY FORCEMAIN
- UT — UNDERGROUND TEL.
- FO — FIBER OPTIC
- UP — UNDERGROUND POWER
- X — X — CHAIN LINK FENCE
- STORM DRAIN
- 45' — EX. INDEX CONTOUR
- 44' — EX. INTERMEDIATE CONTOUR
- +10.00 — EX. SPOT ELEVATION
- 45 — INDEX CONTOUR
- 44 — INTERMEDIATE CONTOUR
- 48.35 — PROPOSED ELEVATION
- SIGN
- E — ELECTRICAL BOX
- F — FIBER OPTIC BOX
- T — TELEPHONE BOX
- M — MANHOLE (AS DEFINED)
- UTILITY MARKER (AS DEFINED)
- GAS METER
- GV — GAS VALVE
- WM — WATER METER
- WV — WATER VALVE
- FIRE HYDRANT
- D — STORM DRAINAGE MANHOLE
- DRAINAGE INLET
- S — SANITARY MANHOLE
- SANITARY CLEANOUT
- BENCHMARK
- CONCRETE SURFACE
- AGGREGATE SURFACE
- HEAVY DUTY ASPHALT
- STANDARD DUTY ASPHALT
- AREA OF 2" CONCRETE REMOVAL (CHIP OUT)
- FULL DEPTH REMOVAL OF EXISTING SLAB

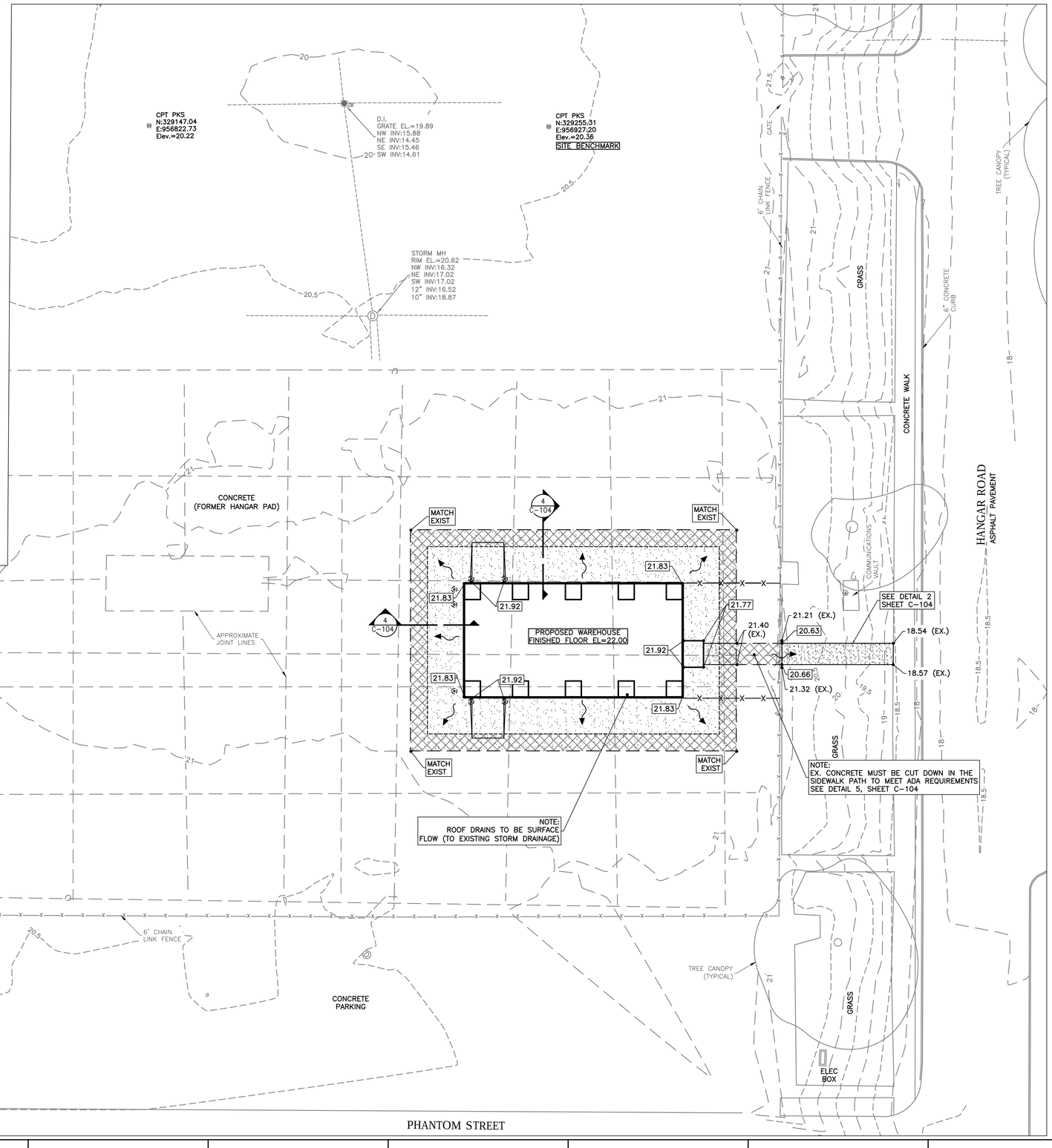

0 20 40 Feet

SCALE: 1" = 20'

LPK architects

LPK ARCHITECTS, P.A.
2208 18TH ST, SUITE D
GULFPORT, MISSISSIPPI 39501
P.O. BOX 7117
GULFPORT, MISSISSIPPI 39506
P: 228.382.3122
F: 601.693.8640

These documents are the sole property of LPK Architects P.A. and are not to reused. Any alterations, revisions or reuse of these documents without the written consent of LPK Architects will result in all sureties and responsibilities for the entire project becoming null and void.

copyright LPK Architects, P.A.

www.GSEeng.com
GSE
CONSULTING ENGINEERS
Gulfport Mobile Nashville
1816 Pass Rd. Gulfport, MS 39501
(T)228-864-5050 (F)228-864-7744

PROFESSIONAL SEAL:

STEPHANIE A. GROVE — LICENSED PROFESSIONAL ENGINEER — 16618 — STATE OF MISSISSIPPI

GENERAL NOTES:

1. THE CONTRACTOR SHALL PROVIDE TO THE PROJECT ENGINEER "AS-BUILT" RECORD DRAWINGS FOR VERIFICATION AND APPROVAL ONE WEEK PRIOR TO REQUESTING A FINAL INSPECTION.
2. THE CONTRACTOR SHALL CONTROL STORMWATER DURING ALL PHASES OF CONSTRUCTION AND TAKE ADEQUATE MEASURES TO PREVENT SEDIMENT WASH OVER THE EXISTING PARKING AREAS OR BUILDUP IN THE EXISTING PROTECTED DRAINAGE FEATURES.
3. THE CONTRACTOR SHALL MAINTAIN RECORD DRAWINGS DURING CONSTRUCTION WHICH SHOW "AS-BUILT" CONDITIONS OF ALL WORK INCLUDING PIPING, DRAINAGE STRUCTURES, TOPO OF OUTLET STRUCTURES, DIMENSIONS, ELEVATIONS, GRADING, ETC.
4. ALL ASPECTS OF THE STORMWATER/DRAINAGE COMPONENTS AND/OR TRANSPORTATION COMPONENTS SHALL BE COMPLETED PRIOR TO ISSUANCE OF A FINAL CERTIFICATE OF OCCUPANCY.
5. DISTURBED AREAS NOT SHOWN TO BE SODDED OR PAVED SHALL BE SEEDED, MULCHED & FERTILIZED.
6. CROSS SLOPE ON CONCRETE WALKS SHALL NOT EXCEED 2% IN ANY DIRECTION.
7. SITE BENCHMARK: PK NAIL, ELEVATION 20.36'

REVISION	DATE	DRAWN	APPROVED

UNITED STATES AIR FORCE — AIR EDUCATION AND TRAINING COMMAND

KEESLER AIR FORCE BASE
BILOXI — MISSISSIPPI
OFFICE OF CIVIL ENGINEERS

36 AES WAREHOUSE/OFFICE

PAVING, GRADING AND DRAINAGE PLAN

SUBMITTED: (Chief of Contracts Design)	RECOMMENDED: (Chief of Engineering)	FACILITY NUMBER:
D. KINMAN	A. MARASCA	XX.X

DESIGNED:	CHECKED:	SCALE:	DRAWING NUMBER:
THK	SAG	1" = 20'	C-102
DRAWN:	**DATE:**	**PROJECT NUMBER:**	**SHEET ____ OF ____**
THK	10-04-17	MAHG 17-9002	

LEGEND:

- FW — FIRE WATER LINE
- W — WATER LINE
- SAN — SANITARY SEWER
- FM — SANITARY FORCEMAIN
- UT — UNDERGROUND TEL.
- FO — FIBER OPTIC
- UP — UNDERGROUND POWER
- X — X — CHAIN LINK FENCE
- STORM DRAIN
- 45' — EX. INDEX CONTOUR
- 44' — EX. INTERMEDIATE CONTOUR
- +10.00 EX. SPOT ELEVATION
- 45 INDEX CONTOUR
- 44 INTERMEDIATE CONTOUR
- 48.35 PROPOSED ELEVATION
- SIGN
- ELECTRICAL BOX
- FIBER OPTIC BOX
- TELEPHONE BOX
- MANHOLE (AS DEFINED)
- UTILITY MARKER (AS DEFINED)
- GAS METER
- GAS VALVE
- WATER METER
- WATER VALVE
- FIRE HYDRANT
- STORM DRAINAGE MANHOLE
- DRAINAGE INLET
- SANITARY MANHOLE
- SANITARY CLEANOUT
- BENCHMARK
- CONCRETE SURFACE
- AGGREGATE SURFACE
- HEAVY DUTY ASPHALT
- STANDARD DUTY ASPHALT
- AREA OF 2" CONCRETE REMOVAL (CHIP OUT)
- FULL DEPTH REMOVAL OF EXISTING SLAB

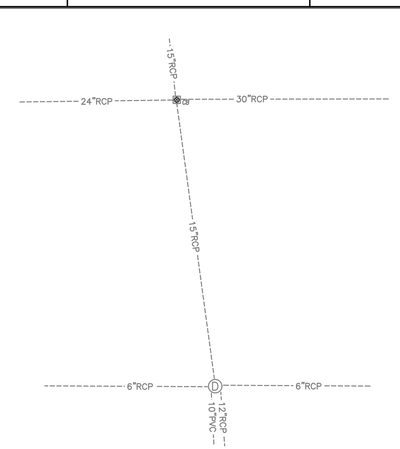

CPT PKS
N:329147.04
E:956822.73
Elev.=20.22

CPT PKS
N:329255.31
E:956927.20
Elev.=20.36

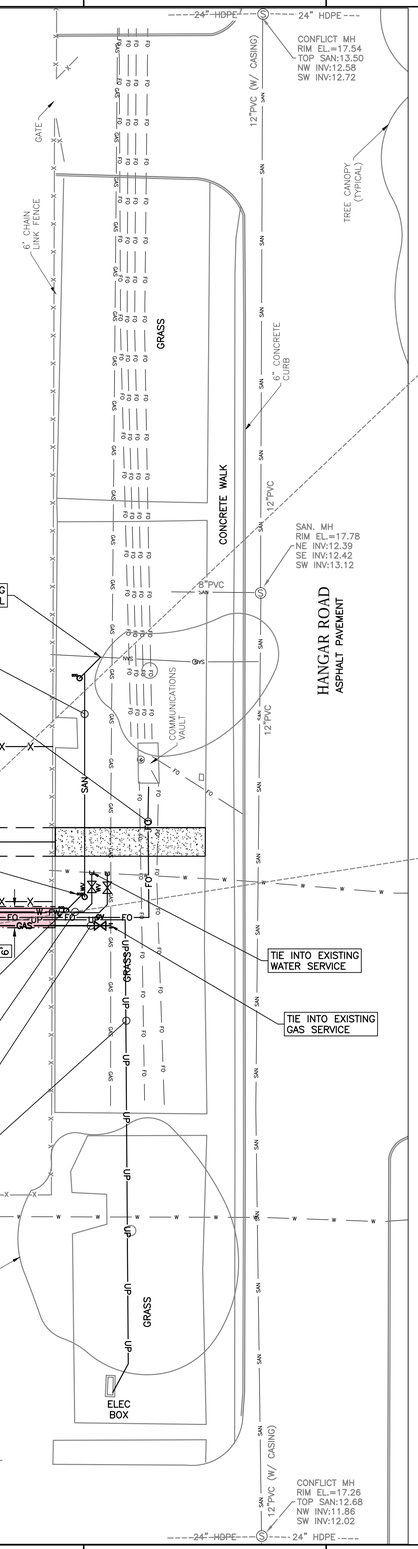

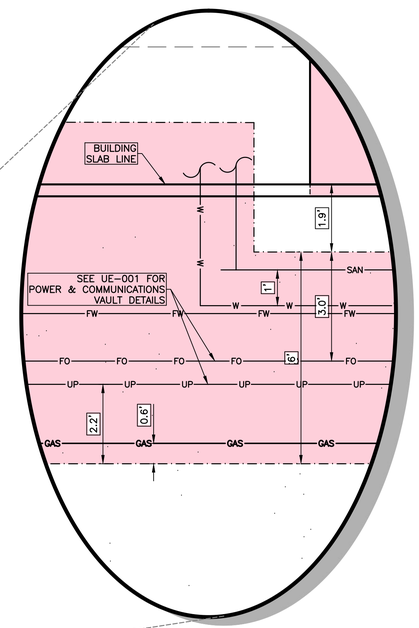

UTILITY TRENCH DETAIL
SCALE: 1" = 2'

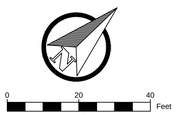

SCALE: 1" = 20'

NOTES:

1. SEE SHEET C-104 FOR SITE/CONSTRUCTION NOTES
2. CONTRACTOR SHALL COORDINATE SANITARY, WATER, POWER, COMMUNICATIONS & GAS CONNECTIONS WITH THE RESPECTIVE PLANS SUCH THAT THE REQUIRED TRENCH IS APPROPRIATELY CONSTRUCTED AND STUB-UPS ARE PLACED PROPERLY TO CONNECT TO THEIR ASSOCIATED APPURTENANCES. IF ADJUSTMENTS TO THE PLAN HEREON ARE REQUIRED THE ENGINEER SHOULD BE NOTIFIED IMMEDIATELY.
3. CONTRACTOR SHALL HAND DIG IN THE AREAS OF POTENTIAL UNDERGROUND CONFLICTS. THIS FIRM HAS CONTACTED ALL AVAILABLE UTILITIES TO DEPICT THE UNDERGROUND APPURTENANCES AS THEY MAY EXIST ON-SITE BUT IT IS THE RESPONSIBLITY OF THE CONTRACTOR TO VERIFY THESE LOCATIONS AND MAKE ALL REPAIRS NECESSARY SHOULD AN EXISTING UTILITY BE IMPAIRED.

LPK architects

LPK ARCHITECTS, P.A.
2208 18TH ST, SUITE D
GULFPORT, MISSISSIPPI 39501
P.O. BOX 7117
GULFPORT, MISSISSIPPI 39506
P: 228.382.3122
F: 601.693.8640

These documents are the sole property of LPK Architects P.A. and are not to reused. Any alterations, revisions or reuse of these documents without the written consent of LPK Architects will result in all sureties and responsibilities for the entire project becoming null and void.

copyright LPK Architects, P.A.

www.GSEeng.com
GSE
CONSULTING ENGINEERS
Gulfport Mobile Nashville
1816 Pass Rd. Gulfport, MS 39501
(T)228-864-5050 (F)228-864-7744

PROFESSIONAL SEAL:

REVISION	DATE	DRAWN	APPROVED

UNITED STATES AIR FORCE — AIR EDUCATION AND TRAINING COMMAND

KEESLER AIR FORCE BASE
BILOXI — MISSISSIPPI
OFFICE OF CIVIL ENGINEERS

36 AES WAREHOUSE/OFFICE

SITE UTILITY PLAN

SUBMITTED: (Chief of Contracts Design)		RECOMMENDED: (Chief of Engineering)	FACILITY NUMBER:
D. KINMAN		A. MARASCA	XX.X
DESIGNED: THK	CHECKED: SAG	SCALE: 1" = 20'	DRAWING NUMBER: C-103
DRAWN: THK	DATE: 10-04-17	PROJECT NUMBER: MAHG 17-9002	SHEET ____ OF ____

SITE/CONSTRUCTION NOTES:

1. THE CONTRACTOR IS TO FIELD VERIFY ALL DIMENSIONS, ELEVATIONS, AND CONDITIONS PRIOR TO CONSTRUCTION OR FABRICATION.
2. THE CIVIL DRAWINGS SHALL BE USED IN CONJUNCTION WITH THE DRAWINGS OF ALL OTHER DISCIPLINES AND ANY APPLICABLE SPECIFICATIONS.
3. THE WORD OF THE ENGINEER AND/OR INSPECTOR SHALL BE FINAL IN ANY MATTER.
4. SUBGRADE AND BASE SHALL BE COMPACTED TO THE REQUIREMENTS SET FORTH IN THE ENGINEERING PLANS.
5. ALL FILL AND EMBANKMENT CONSTRUCTION SHALL BE COMPACTED AS REQUIRED IN LAYERS NOT TO EXCEED 6".
6. ALL EXCESS UNCLASSIFIED EXCAVATION IS TO BE UTILIZED FOR CONSTRUCTION OF EMBANKMENTS AND SLOPES NOT DIRECTLY UNDER THE TRAVEL WAY OR PARKING AREAS PRIOR TO USING ANY OFFSITE BORROW EXCAVATION. AFTER CONSTRUCTION OF SUCH AREAS IS COMPLETED, EXCESS EXCAVATION SHALL BE SPREAD AS DIRECTED BY THE ENGINEER, OR AT THE ENGINEER'S DIRECTION, HAULED FROM THE SITE AT NO ADDITIONAL COST.
7. THE CONTRACTOR IS RESPONSIBLE FOR COMPLIANCE WITH ALL STATE, LOCAL AND FEDERAL LAWS. IT IS THE CONTRACTOR'S RESPONSIBILITY TO INSURE THAT ALL OF THESE LAWS AND REGULATIONS HAVE BEEN MET.
8. THE CONTRACTOR SHALL NOTIFY GULF STATES ENGINEERING AND ANY LOCAL JURISDICTIONAL INSPECTOR FOR APPROVAL 48 HOURS BEFORE THE BEGINNING OF ANY SUBSEQUENT PHASE OF CONSTRUCTION.
9. THE CONTRACTOR SHALL IMMEDIATELY INFORM THE ENGINEER OF ANY DISCREPANCIES OR ERRORS DISCOVERED IN THE PLANS.
10. THE CONTRACTOR IS TO ABIDE BY THE KEESLER DIG PERMIT AND IS REQUIRED TO COORDINATE WITH THE MISSISSIPPI ONE-CALL LINE LOCATE CENTER (811) FOR MARKING OF UNDERGROUND UTILITIES PRIOR TO CONSTRUCTION. THE CONTRACTOR SHALL RENEW CONFIRMATION NUMBERS AS OFTEN AS REQUIRED DURING THE DURATION OF THE PROJECT. THE CURRENT CONFIRMATION NUMBER SHALL BE ON THE PROJECT SITE AT ALL TIMES. THE ENGINEER HAS DILIGENTLY ATTEMPTED TO LOCATE AND INDICATE ALL EXISTING FACILITIES ON THESE PLANS, HOWEVER, THIS INFORMATION IS SHOWN FOR THE CONTRACTOR'S CONVENIENCE ONLY. THE ENGINEER ASSUMES NO RESPONSIBILITY FOR THE LOCATION OF UTILITIES SHOWN OR NOT SHOWN. THE CONTRACTOR IS TO CONTACT THE UTILITY COMPANIES FOR EXACT LOCATION OF THEIR UTILITIES PRIOR TO STARTING CONSTRUCTION. ANY AND ALL DAMAGE MADE TO UTILITIES BY THE CONTRACTOR SHALL BE THE SOLE RESPONSIBILITY OF THE CONTRACTOR TO REPAIR AND REPLACE.
11. THE CONTRACTOR SHALL EMPLOY ALL NECESSARY MEASURES TO INSURE THAT THE PROJECT IS OSHA COMPLIANT.
12. ANY EXCESS MATERIAL FROM CONSTRUCTION ACTIVITIES SHALL BE LEGALLY DISPOSED OF BY THE CONTRACTOR AT CONTRACTOR'S EXPENSE.
13. THE CONTRACTOR IS RESPONSIBLE FOR PROVIDING ADEQUATE BEDDING AND HAUNCHING FOR ALL IMPROVEMENTS. THE CONTRACTOR WILL BE RESPONSIBLE FOR PROPER COMPACTION ON ANY AND ALL UTILITY DITCHES.
14. THE CONTRACTOR SHALL REPLACE ANY FAULTY OR IMPROPERLY INSTALLED IMPROVEMENTS AT HIS EXPENSE.
15. THE CONTRACTOR SHALL NOT DEVIATE FROM THE PLANS WITHOUT PROPER CONSENT.
16. THE CONTRACTOR SHALL STRICTLY FOLLOW THE LOCAL AUTHORITIES AND/OR THE ENGINEERING PLANS FOR ALL GRADING, UNDERCUTTING, BACKFILLING, AND PAVING REQUIREMENTS. ALL RESPECTIVE TASKS SHALL BE APPROVED BY RESPONSIBLE INSPECTOR PRIOR TO ACCEPTANCE.
17. THE CONTRACTOR WILL INSURE THAT POSITIVE AND ADEQUATE DRAINAGE IS MAINTAINED AT ALL TIMES WITHIN THE PROJECT LIMITS. THIS MAY INCLUDE, BUT NOT BE LIMITED TO, REPLACEMENT OR RECONSTRUCTION OF EXISTING DRAINAGE STRUCTURES THAT HAVE BEEN DAMAGED, REMOVED OR REGRADED AS REQUIRED BY THE ENGINEER.
18. ALL GRAVITY PIPES SHALL BE LAID ON SMOOTH CONTINUOUS GRADES WITH NO DETECTABLE BENDS AT JOINTS.
19. THE CONTRACTOR SHALL PROVIDE ANY EXCAVATION AND MATERIAL SAMPLES NECESSARY TO CONDUCT REQUIRED SOIL AND CONCRETE TESTS, ALL ARRANGEMENTS AND SCHEDULING FOR THE TESTING SHALL BE THE CONTRACTOR'S RESPONSIBILITY.
20. FILTER BLANKET USED WITH RIPRAP SHALL BE A NON-WOVEN GEOTEXTILE.
21. BEDDING & HAUNCHING: BEDDING & HAUNCHING MATERIALS FOR PVC & HDPE PIPE SHALL BE CRUSHED STONE. WHERE CRUSHED STONE HAS BEEN UTILIZED FOR TRENCH FOUNDATION, THE SAME MATERIAL SHALL BE USED FOR BEDDING AND HAUNCHING REGARDLESS OF PIPE TYPE. CRUSHED STONE SHALL CONFORM TO THE LATEST REVISION OF ASTM C 33, AS AMENDED TO DATE, GRADATION #57 (ASTM #57) VARYING IN SIZES 1/4" THROUGH 3/4" AND SELECT EARTH MATERIALS FOR BEDDING AND HAUNCHING SHALL BE AS SPECIFIED FOR INITIAL BACKFILL.

BACKFILL: INITIAL BACKFILL MATERIAL SHALL BE SELECT EARTH MATERIALS OR CRUSHED STONE AS SPECIFIED FOR BEDDING AND HAUNCHING MATERIALS. SELECT BACKFILL MATERIALS SHALL CONSIST OF FINELY DIVIDED EARTH, STONE, DUST, SAND, CRUSHED STONE, OR OTHER APPROVED MATERIAL CAREFULLY PLACED ABOUT THE PIPE IN UNIFORM SUCCEEDING LAYERS NOT EXCEEDING SIX (6) INCHES IN THICKNESS. EACH LAYER SHALL BE UNIFORMLY PLACED AND TAMPED WITH PROPER HAND TOOLS IN A MANNER WHICH WILL NOT DISTURB OR INJURE THE PIPE. BACKFILLING SHALL BE CARRIED ON SIMULTANEOUSLY ON BOTH SIDES OF THE PIPE IN A MANNER WHICH WILL PREVENT INJURIOUS SIDE PRESSURES FROM OCCURRING. IF SUITABLE SELECT MATERIALS ARE NOT AVAILABLE FROM TRENCH EXCAVATION, THE CONTRACTOR WILL BE REQUIRED TO OBTAIN THEM ELSEWHERE. EARTH MATERIALS UTILIZED FOR INITIAL BACKFILL SHALL BE SUITABLE MATERIALS SELECTED FROM MATERIALS EXCAVATED FROM THE TRENCH. SUITABLE MATERIALS SHALL BE CLEAN AND FREE OF ROCK LARGER THAN 2-INCHES AT ITS LARGEST DIMENSION, ORGANICS, CINDERS, STUMPS, LIMBS, FROZEN EARTH OR MUD, MAN-MADE WASTES AND OTHER UNSUITABLE MATERIALS. SHOULD THE MATERIAL EXCAVATED FROM THE TRENCH BE SATURATED, THE SATURATED MATERIAL MAY BE USED AS EARTH MATERIAL, PROVIDED IT IS ALLOWED TO DRY PROPERLY AND IT IS CAPABLE OF MEETING THE SPECIFIED COMPACTION REQUIREMENTS. WHEN NECESSARY, INITIAL BACKFILL MATERIALS SHALL BE MOISTENED TO FACILITATE COMPACTION BY TAMPING. IF MATERIALS EXCAVATED FROM THE TRENCH ARE NOT SUITABLE FOR USE AS INITIAL BACKFILL MATERIAL, PROVIDE SELECT MATERIAL CONFORMING TO THE REQUIREMENTS OF THIS SECTION.

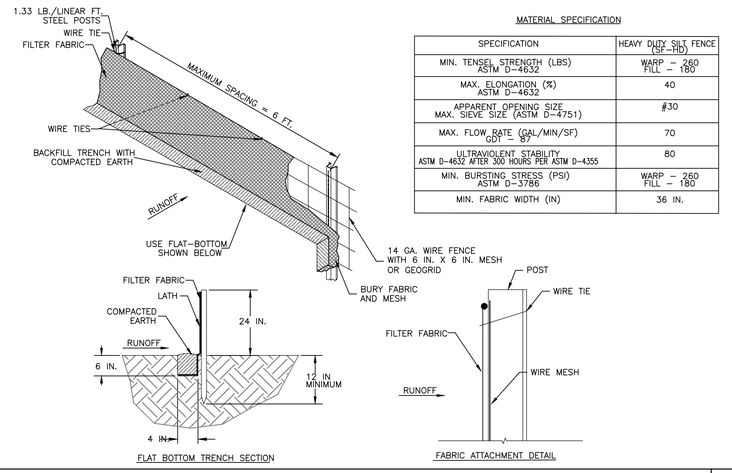

MATERIAL SPECIFICATION

SPECIFICATION	HEAVY DUTY SILT FENCE (SF-HD)
MIN. TENSEL STRENGTH (LBS) ASTM D-4632	WARP - 260 FILL - 180
MAX. ELONGATION (%) ASTM D-4632	40
APPARENT OPENING SIZE MAX. SIEVE SIZE (ASTM D-4751)	#30
MAX. FLOW RATE (GAL/MIN/SF) GDT - 87	70
ULTRAVIOLENT STABILITY ASTM D-4632 AFTER 300 HOURS PER ASTM D-4355	80
MIN. BURSTING STRESS (PSI) ASTM D-3786	WARP - 260 FILL - 180
MIN. FABRIC WIDTH (IN)	36 IN.

SILT FENCE DETAIL N.T.S. 1

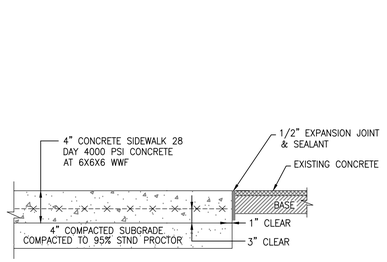

ON-SITE SIDEWALK - SECTION N.T.S. 2

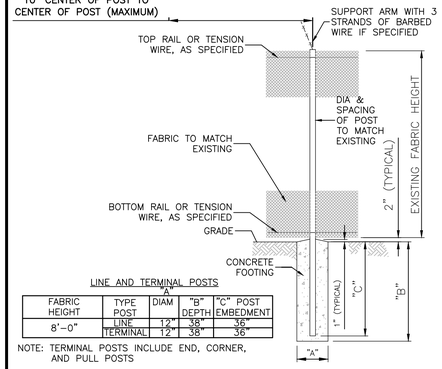

LINE AND TERMINAL POSTS

FABRIC HEIGHT	TYPE POST	DIAM "A"	"B" DEPTH	"C" POST EMBEDMENT
8'-0"	LINE	12"	38"	36"
	TERMINAL	12"	38"	36"

NOTE: TERMINAL POSTS INCLUDE END, CORNER, AND PULL POSTS

CHAIN LINK FENCE DETAIL N.T.S. 3

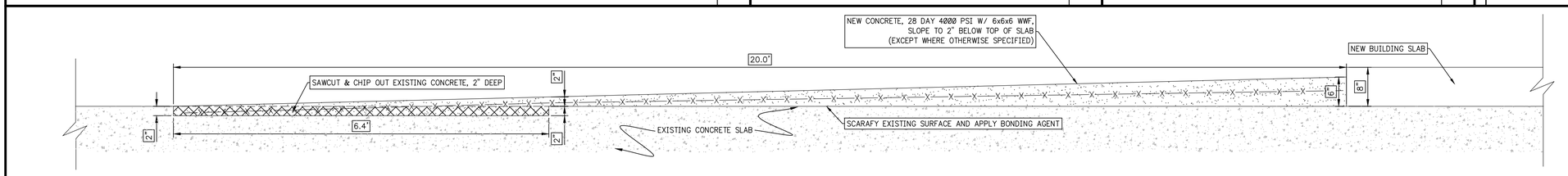

SECTION - CONCRETE APRON DETAIL SCALE: 1" = 1' 4

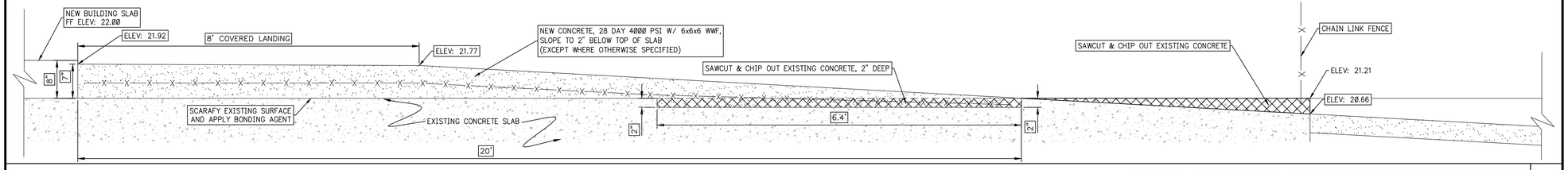

SECTION - CONCRETE WALK, EXISTING EDGE OF SLAB TO NEW BUILDING SCALE: N.T.S. 5

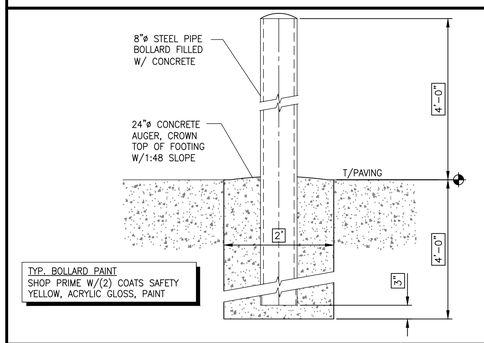

EXTERIOR FIXED BOLLARD N.T.S. 6

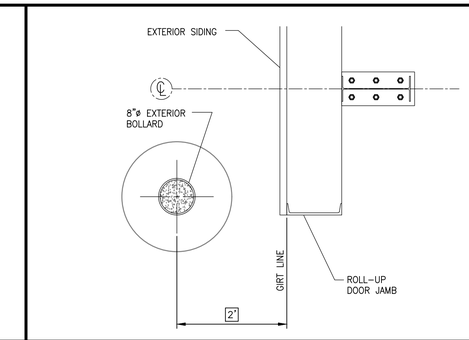

BOLLARD PLAN AT ROLLUP DOORS N.T.S. 7

LPK architects

LPK ARCHITECTS, P.A.
2206 18TH ST, SUITE D
GULFPORT, MISSISSIPPI 39501
P.O. BOX 7117
GULFPORT, MISSISSIPPI 39506
P: 228.382.3122
F: 601.693.8640

These documents are the sole property of LPK Architects P.A. and are not to reused. Any alterations, revisions or reuse of these documents without the written consent of LPK Architects will result in all sureties and responsibilities for the entire project becoming null and void.
copyright LPK Architects, P.A.

www.GSEeng.com
GSE CONSULTING ENGINEERS
Gulfport Mobile Nashville
1816 Pass Rd. Gulfport, MS 39501
(T)228-864-5050 (F)228-864-7744

PROFESSIONAL SEAL:

STEPHANIE A. GROVES LICENSED PROFESSIONAL ENGINEER 16618 STATE OF MISSISSIPPI

REVISION	DATE		DRAWN	APPROVED

UNITED STATES AIR FORCE — AIR EDUCATION AND TRAINING COMMAND

KEESLER AIR FORCE BASE
BILOXI - MISSISSIPPI
OFFICE OF CIVIL ENGINEERS

36 AES WAREHOUSE/OFFICE

CIVIL DETAILS
SHEET 1 OF 2

SUBMITTED: (Chief of Contracts Design)	RECOMMENDED: (Chief of Engineering)	FACILITY NUMBER:
D. KINMAN	A. MARASCA	XX.X
DESIGNED: THK	CHECKED: SAG	SCALE: 1" = 20'
DRAWN: THK	DATE: 10-04-17	PROJECT NUMBER: MAHS 17-9002
		DRAWING NUMBER: C-104
		SHEET _____ OF _____

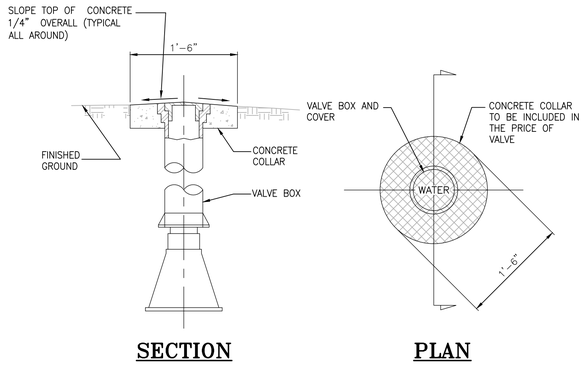

VALVE BOX COLLAR DETAIL
1/2" = 1'
1

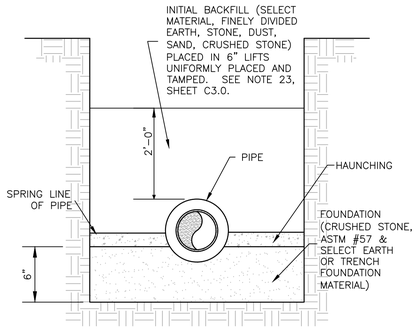

EMBEDMENT DETAIL FOR PVC GRAVITY SEWER
N.T.S.
3

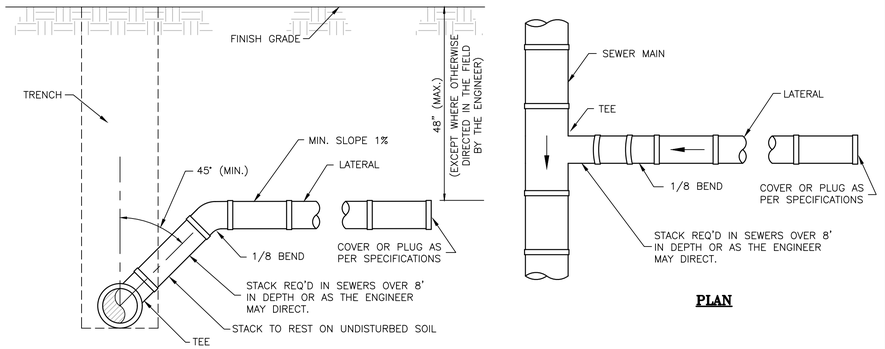

ELEVATION TYPICAL TEE & LATERAL INSTALLATION
N.T.S.
2

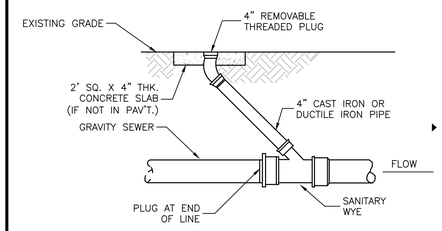

THROUGH FLOW CLEANOUT DETAIL
1/2" = 1'
4

LPK architects

LPK ARCHITECTS, P.A.
2208 18TH ST, SUITE D
GULFPORT, MISSISSIPPI 39501
P.O. BOX 7117
GULFPORT, MISSISSIPPI 39506
P: 228.382.3122
F: 601.693.8640
These documents are the sole property of LPK Architects P.A. and are not to reused. Any alterations, revisions or reuse of these documents without the written consent of LPK Architects will result in all sureties and responsibilities for the entire project becoming null and void.
copyright LPK Architects, P.A.

www.GSEeng.com
GSE
CONSULTING ENGINEERS
Gulfport Mobile Nashville
1816 Pass Rd. Gulfport, MS 39501
(T)228-864-5050 (F)228-864-7744

PROFESSIONAL SEAL:

REVISION	DATE		DRAWN	APPROVED

UNITED STATES AIR FORCE — AIR EDUCATION AND TRAINING COMMAND

KEESLER AIR FORCE BASE
BILOXI — MISSISSIPPI

OFFICE OF CIVIL ENGINEERS

36 AES WAREHOUSE/OFFICE

CIVIL DETAILS
SHEET 2 OF 2

SUBMITTED: (Chief of Contracts Design) D. KINMAN	RECOMMENDED: (Chief of Engineering) A. MARASCA		FACILITY NUMBER: XX.X
DESIGNED: THK	CHECKED: SAG	SCALE: 1" = 20'	DRAWING NUMBER: C-105
DRAWN: THK	DATE: 10-04-17	PROJECT NUMBER: MAHG 17-9002	SHEET _____ OF _____

GENERAL NOTES

1. THE CONTRACTOR IS TO FIELD VERIFY ALL DIMENSIONS, ELEVATIONS, AND CONDITIONS PRIOR TO CONSTRUCTION OR FABRICATION.

2. THE STRUCTURAL DRAWINGS SHALL BE USED IN CONJUNCTION WITH THE DRAWINGS OF ALL OTHER DISCIPLINES AND ANY APPLICABLE SPECIFICATIONS. THE CONTRACTOR SHALL VERIFY THE REQUIREMENTS OF OTHER TRADES AS TO SLEEVES, HANGERS, INSERTS, ANCHORS, HOLES, AND OTHER ITEMS TO BE INCORPORATED INTO THE STRUCTURE.

3. THE STRUCTURAL DRAWINGS HEREIN REPRESENT THE FINISHED STRUCTURE. THE CONTRACTOR SHALL PROVIDE ALL TEMPORARY BRACING AND SUPPORTS REQUIRED TO ERECT AND HOLD THE STRUCTURE IN PROPER ALIGNMENT UNTIL ALL STRUCTURAL WORK, CURING, CONNECTIONS, ETC. HAVE BEEN COMPLETED. THE INVESTIGATION, DESIGN, SAFETY, ADEQUACY, AND INSPECTION OF ERECTION BRACING, SHORING, TEMPORARY SUPPORTS, ETC. IS THE SOLE RESPONSIBILITY OF THE CONTRACTOR.

4. WHERE A DETAIL IS SHOWN FOR ONE CONDITION, IT SHALL APPLY FOR ALL LIKE OR SIMILAR CONDITIONS EVEN THOUGH NOT SPECIFICALLY CALLED FOR ON THE DRAWINGS.

PRE-ENGINEERED METAL BUILDING DESIGN:

1. THE BUILDINGS SHALL BE DESIGNED UTILIZING PINNED BASES.
   MAX DEFLECTIONS OF PRIMARY AND SECONDARY BUILDING SUPPORT FRAMES:
   1. FRAME = H/180
   2. PURLINS = L/180
   3. GIRTS = L/120
   4. SHEETING = L/120

1. GENERAL BUILDING CODE: 2015 INTERNATIONAL BUILDING CODE

2. LIVE LOADS:
   ROOF LIVE LOAD: 20 PSF
   COLLATERAL LOAD: 5 PSF

3. WIND CODE:

WIND CODE:	ASCE 7-10
WIND SPEED:	160 MPH
RISK CATEGORY:	II
EXPOSURE CATAGORY:	C
INTERNAL PRESSURE COEFFICIENTS:	+0.18 AND -0.18

THE METAL BUILDING MANUFACTURER TO CALCULATE AND DESIGN FOR APPLICABLE WIND PRESSURES FOR THE MAIN WIND FORCE RESISTING SYSTEM AND COMPONENTS AND CLADDING

4. SEISMIC LOADS PER IBC SECTION 1607: TO BE PROVIDED BY THE METAL BUILDING MANUFACTURER.

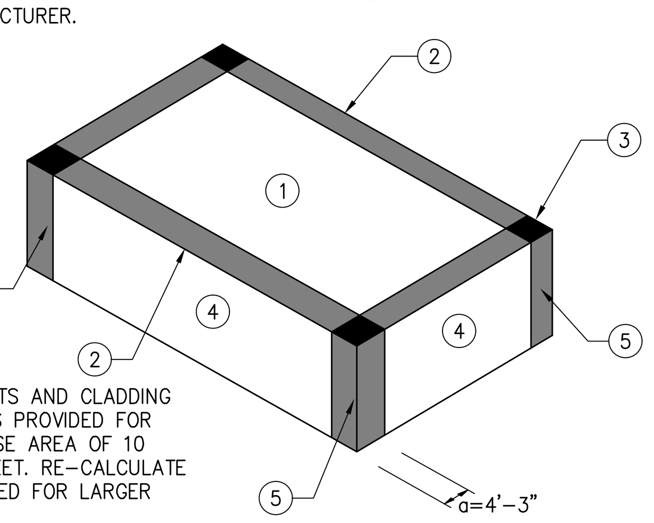

COMPONENTS AND CLADDING PRESSURES PROVIDED FOR WORST CASE AREA OF 10 SQUARE FEET. RE-CALCULATE AS REQUIRED FOR LARGER AREAS.

WIND COMPONENTS AND CLADDING (ELEMENTS)

ZONE	DESCRIPTION	PRESSURE
1	INTERIOR ROOF ZONE	+23.1, -56.9
2	ROOF END ZONE	+23.1, -95.5
3	ROOF CORNER ZONE	+23.1, -143.7
4	INTERIOR WALL ZONE	+56.9, -61.8
5	WALL END ZONE	+56.9, -76.2

6. SEISMIC PER IBC SECTION 1607: NA (WIND GOVERNS DESIGN LOADS)

SITEWORK & SOIL NOTES

1. STRUCTURAL FILL SHALL BE COMPACTED TO 95% OF THE MAXIMUM DRY DENSITY AS DETERMINED BY STANDARD PROCTOR, ASTM D698, AND AT LEAST 98% OF STANDARD PROCTOR WITHIN 1'-0" BELOW CONCRETE SUBGRADE. FILL SHALL BE PLACED IN LIFTS NOT TO EXCEED 8 INCHES IN COMPACTED FILL THICKNESS.

2. FOUNDATION DESIGN IS BASED ON AN ALLOWABLE BEARING PRESSURE OF 1,500 P.S.F. AT MINIMUM 24" BELOW FINISHED SUB-GRADE LEVELS. MINIMUM CONTINUOUS FOOTING WIDTH IS 12 INCHES.

3. REMOVE ALL VEGETATION AND DEBRIS, INCLUDING PAVEMENTS, SIDEWALKS, BUILDING FOUNDATIONS, AND ABANDONED UTILITIES.

4. PROOFROLL THE EXPOSED SUBGRADE TO DETECT SOFT OR YIELDING SOILS. REMOVE ANY SOFT OR YIELDING SOILS, SCARIFY, MOISTURE CONDITION AND RECOMPACT IN ACCORDANCE WITH ASTM D-698.

5. PROVIDE A 10 MIL THICK VAPOR BARRIER BELOW THE CONCRETE SLAB. DO NOT PUNCTURE THE VAPOR BARRIER. LAP AND TAPE ENDS.

7. IT IS IMPERATIVE THAT THE ACTUAL BEARING GRADE BE CHECKED IN THE FIELD DURING CONSTRUCTION BY THE SOILS CONSULTANT TO ENSURE THAT THE FOUNDATION SYSTEM IS SUPPORTED BY SUITABLE BEARING SOILS AND WILL PERFORM IN ACCORDANCE WITH THE ASSUMED CONDITIONS.

8. PROVIDE POSITIVE DRAINAGE AWAY FROM EXCAVATIONS SO AS NOT TO ALLOW STANDING WATER FOR LONG PERIODS OF TIME.

9. SOILS EXCAVATED FROM THE SITE THAT ARE FREE OF DELETERIOUS MATERIALS MAY BE USED AS FILL.

10. FOOTING EXCAVATIONS LEFT OPEN FOR MORE THAN ONE DAY SHALL BE PROTECTED TO REDUCE EVAPORATION OR ENTRY OF SOIL MOISTURE.

11. WATER SHALL NOT BE ALLOWED TO COLLECT NEAR THE FOUNDATIONS OR FLOOR SLAB AREAS OF THE BUILDING EITHER DURING OR AFTER CONSTRUCTION. UNDERCUT OR EXCAVATION AREAS SHALL BE SLOPED TO ONE CORNER TO FACILITATE REMOVAL OF ANY COLLECTED GROUND WATER OR SURFACE RUNOFF.

SITEWORK & SOIL NOTES (CONT.)

12. NO GEOTECHNICAL REPORT WILL BE PROVIDED. FOUNDATION DESIGN IS BASED ON AN ALLOWABLE BEARING PRESSURE OF 1,500 P.S.F. IN ACCORDANCE WITH 2015 IBC (CHAPTER 18). THE GENERAL CONTRACTOR MUST COMPLY WITH THE SPECIAL INSPECTION REQUIREMENTS INDICATED ON THIS SHEET AND THE 2015 IBC WHICH DICTATES A GEOTECHNICAL ENGINEER MUST BE CONTRACTED DURING CONSTRUCTION TO VERIFY FOOTING EXCAVATION IS SUITABLE FOR BEARING AND BACKFILL MEETS COMPACTION REQUIREMENTS. THE CONTRACTOR IS RESPONSIBLE TO VERIFY SOILS ARE ADEQUATE FOR FOUNDATION BEARING. THIS MAY REQUIRE UNDERCUTTING AND FILL. THE INDICATED FOOTING DEPTH ON THE DESIGN DRAWINGS IS BASED ON UPLIFT REQUIREMENTS DUE TO WIND AND MAY REQUIRE ADDITIONAL DEPTH IF DICTATED BY GEOTECHNICAL ENGINEER ON SITE.

GENERAL CONCRETE NOTES

1. ALL CONCRETE NOT SPECIFICALLY NOTED = 4000 PSI @ 28 DAYS

2. REBAR: ASTM A615, GRADE 60
   DEFORMED WELDED WIRE FABRIC: ASTM A185

3. JOINT FILLER: VINYLFORM GRADE #300 BY SONNEBORN; CERAMAR FLEXIBLE FOAM BY W.R. MEADOWS; PLASTAZOTE BY E-POXY INDUSTRIES, INC. OR APPROVED EQUIVALENT.

6. MOISTEN SUBGRADE PRIOR TO PLACING CONCRETE.

7. FOR SPECIAL WEATHER CONCRETING - HOT & COLD WEATHER CONCRETING - FOLLOW ALL APPLICABLE ACI SPECIFICATIONS

8. CONCRETE FINISHES:
   A. BROOM FINISH AT EXTERIOR CONCRETE.
      1. WHEN CONCRETE HAS HARDENED SUFFICIENTLY, IT SHALL BE FLOATED TO A COMPACT AND SMOOTH SURFACE. FLOATING MAY BE ACCOMPLISHED WITH WOOD OR METAL FLOATS OR BY MECHANICAL FLOAT.
      2. AFTER FLOATING IS COMPLETED AND THE CONCRETE HAS HARDENED ENOUGH SO THAT IT WILL RETAIN THE SCORING, BRUSH THE SURFACE WITH A STEEL WIRE BROOM OR ONE MADE FROM STIFF COARSE FIBERS IN A DIRECTION TRANSVERSE TO THE DIRECTION OF TRAFFIC.

   B. TROWELLED FINISH AT INTERIOR CONCRETE.
      1. AFTER FLOATING IS COMPLETED AND THE CONCRETE HAS HARDENED ENOUGH SO THAT WATER AND FINE MATERIAL ARE NOT WORKED TO THE SURFACE, THE SURFACE SHALL BE THOROUGHLY TROWELLED BY MACHINE TROWELLING WITH A MOTOR DRIVEN ROTARY TROWEL. THE MACHINE COMPACTING, HAND AND MACHINE TROWELLING OPERATIONS SHALL LEAVE A SMOOTH, HARD, IMPERVIOUS, EVEN FINISH.

   C. THE HORIZONTAL SURFACES OF PUMP PADS, COLUMN PEDESTALS, TOPS OF WALLS, EQUIPMENT FOUNDATIONS REQUIRING GROUT, STAIR TREADS AND CONCRETE PADS FOR STAIRS SHALL RECEIVE A WOOD FLOAT FINISH UNLESS OTHERWISE SPECIFIED.

   D. VERTICAL SURFACES OF EXPOSED AREAS ARE TO RECEIVE A RUBBED FINISH USING A WOOD OR STEEL FLOAT OR BURLAP TO APPLY THE GROUT. EXCESS GROUT SHALL BE REMOVED.

9. DUSTING WITH ANY MATERIAL TO ABSORB SURFACE WATER IS PROHIBITED.

10. IMMEDIATELY AFTER FORMS ARE REMOVED, FILL ALL HONEYCOMB DEPRESSIONS OR OTHER VOIDS TO OBTAIN STRAIGHT AND FLUSH SURFACES.

11. VERTICAL SURFACES SHALL HAVE ALL TIE HOLES AND SURFACE IMPERFECTIONS CORRECTED WITH MORTAR.

12. CURING:
   APPLY LIQUID CURING COMPOUND TO HORIZONTAL SURFACES AS SOON AS POSSIBLE AFTER FINISHING, IN ACCORDANCE WITH MANUFACTURER'S RECOMMENDATIONS. CURE VERTICAL SURFACES BY LEAVING FORMS IN PLACE A MINIMUM OF (7) DAYS.

13. REBAR DETAILING SHALL BE PER THE LATEST EDITION OF THE ACI BUILDING CODE AND DETAILING MANUAL.

14. CONSTRUCTION JOINTS:
   IN GENERAL, CONSTRUCTION JOINTS SHALL BE PLACED WHERE SHOWN ON THE DRAWINGS. JOINTS NOT SHOWN ON THE DRAWINGS SHALL BE APPROVED BY THE PROJECT ENGINEER AND SHALL BE LOCATED AND MADE SO AS TO LEAST IMPAIR THE STRENGTH OF THE STRUCTURE. ALL JOINTS SHALL BE KEYED AND DOWELED UNLESS OTHERWISE SHOWN ON THE DRAWINGS. WHERE A JOINT IS TO BE MADE, THE SURFACE OF THE CONCRETE SHALL BE THOROUGHLY CLEANED AND ALL LAITANCE REMOVED. IN ADDITION, VERTICAL JOINTS SHALL BE THOROUGHLY WETTED, AND SLUSHED WITH A COAT OF NEAT CEMENT GROUT IMMEDIATELY BEFORE PLACING OF NEW CONCRETE.

15. EARLY ENTRY SAW CUTTING SHOULD BE PERFORMED IN GREEN CONCRETE AS SOON AS SUFFICIENT CURING HAS TAKEN PLACE TO SUPPORT THE WEIGHT OF THE OPERATOR AND SAW. CUTS SHOULD BE PERFORMED USING A BLADE SPECIFICALLY DESIGNED FOR DRY EARLY ENTRY CUTTING.

16. CONTINUOUS FOUNDATION BARS SHALL HAVE SPLICES STAGGERED A MINIMUM OF 4'-0". ALL LAP SPLICES SHALL BE MADE WITH A MINIMUM LENGTH OF 36 BAR DIAMETERS. MAKE ALL BARS CONTINUOUS AROUND CORNERS BY USE OF CORNER BARS.

17. DETAIL BARS IN ACCORDANCE WITH A.C.I. DETAILING MANUAL AND A.C.I. BUILDING CODE REQUIREMENTS FOR REINFORCED CONCRETE, LATEST EDITIONS. NO WELDING OF REINFORCEMENT SHALL BE ALLOWED UNLESS NOTED OR OTHERWISE APPROVED BY THE ARCHITECT AND STRUCTURAL ENGINEER.

18. PROVIDE THE FOLLOWING CONCRETE COVER FOR ALL REINFORCEMENT:
   1. CONCRETE CAST AGAINST AND PERMANENTLY EXPOSED TO EARTH = 3"
   2. ALL OTHER AREAS = 1 1/2"

19. PROVIDE 3/4" CHAMFER OR RADIUS ON ALL EXPOSED CORNERS.

20. CONTRACTOR SHALL NOT PLACE ANY CONCRETE REINFORCEMENT UNTIL REINFORCING SHOP DRAWINGS HAVE BEEN SUBMITTED, REVIEWED AND RETURNED BY THE ARCHITECT AND STRUCTURAL ENGINEER. REINFORCING SHOP DRAWINGS SHALL CONSIST OF BOTH "CUT" AND PLACING SHEETS. PLACING SHEETS SHALL CONTAIN ALL INFORMATION NECESSARY TO POSITION ALL REINFORCING STEEL IN THE FIELD WITHOUT HAVING TO REFER TO THE STRUCTURAL DRAWINGS. ARCHITECTURAL AND STRUCTURAL DRAWINGS ARE NOT PERMITTED FOR USE AS SHOP DRAWINGS. ARCHITECTURAL AND STRUCTURAL DRAWINGS SHALL NOT BE REPRODUCED IN ANY MANNER FOR USE AS SHOP DRAWINGS.

21. EMBEDMENT AND LAP SPLICES OF ALL REINFORCEMENT SHALL CONFORM TO THE FOLLOWING SCHEDULES, UNLESS NOTED OTHERWISE.
   A. EMBEDMENT LENGTHS:

#3 - 14"	#6 - 28"	#9 - 54"
#4 - 14"	#7 - 42"	#10 - 60"
#5 - 24"	#8 - 48"	#11 - 66"

   B. LAP SPLICE LENGTHS:

#3 - 19"	#6 - 37"	#9 - 70"
#4 - 25"	#7 - 54"	#10 - 79"
#5 - 31"	#8 - 62"	#11 - 87"

22. THE CONTRACTOR SHALL BE RESPONSIBLE FOR THE DESIGN, ENGINEERING, STRUCTURAL ADEQUACY, AND CONSTRUCTION OF ALL SOIL RETAINING STRUCTURES AND CONCRETE SHORING AND FORMWORK IN ACCORDANCE WITH THE CONTRACT SPECIFICATIONS.

23. COORDINATE ALL CONCRETE WORK WITH THE PLACEMENT OF PIPING, INSERTS, FLOOR DRAINS, AND OTHER EMBEDDED ITEMS INDICATED ON THE CONTRACT DRAWINGS.

ANCHOR BOLTS AND THREADED ROD

1. ALL FOUNDATION ANCHOR BOLTS TO BE F1554 GRADE 36 STEEL UNLESS SPECIFICALLY NOTED OTHERWISE

2. LOCATE ANCHOR BOLTS ACCURATELY, SET WITH TEMPLATES, AND SECURELY HOLD IN POSITION WHILE PLACING CONCRETE. PROTECT IN-PLACE ANCHOR BOLTS FROM CONSTRUCTION ACTIVITY.

3. INSERTING ANCHOR BOLTS INTO FRESH OR PARTIALLY HARDENED CONCRETE IS PROHIBITED. SUBSTITUTING CONCRETE/EXPANSION OR ADHESIVE ANCHORS WHERE EMBEDDED ANCHOR BOLTS ARE SHOWN IS PROHIBITED UNLESS NOTED OTHERWISE.

4. ALL ANCHOR BOLTS SHALL BE DELIVERED TO THE JOB SITE FREE OF EXCESS RUST, MILL SCALE, GREASE, ETC.

SPECIAL INSPECTIONS:

1. THE CONTRACTOR SHALL INCLUDE IN THE BID THE COST OF ALL TESTING AND INSPECTIONS INDICATED ON THE PLANS AND IN THE SPECIFICATIONS, INCLUDING SPECIAL INSPECTIONS REQUIRED BY THE BUILDING CODE. THE ACTUAL CONTRACTING OF THE INSPECTION AND TESTING SERVICES SHALL BE IN ACCORDANCE WITH THE DIVISION OF RESPONSIBILITY DICTATED BY THE LOCAL BUILDING CODE.

2. IBC SECTION 1704 REQUIRES THAT IN ADDITION TO THE INSPECTIONS REQUIRED BY SECTION 109, THE OWNER SHALL EMPLOY ONE OR MORE SPECIAL INSPECTORS WHO SHALL PROVIDE INSPECTIONS DURING CONSTRUCTION OF CERTAIN TYPES OF WORK.

3. "SPECIAL INSPECTION" CONCERNS WORK REQUIRING OBSERVATION AND JUDGEMENT AND SHALL BE PERFORMED BY A STRUCTURAL ENGINEER (OR A DESIGNATED PERSON UNDER THE SUPERVISION OF THE ENGINEER). "TESTING" INVOLVES THE ANALYSIS OF MATERIALS IN ACCORDANCE WITH APPROVED STANDARDS AND SHALL BE PERFORMED BY AN INDEPENDENT TESTING AGENCY.

4. THE CONTRACTOR SHALL COORDINATE THE TESTING AND INSPECTION SERVICES IN ACCORDANCE WITH THE PROGRESS OF THE WORK. THE CONTRACTOR SHALL PROVIDE SUFFICIENT PRIOR NOTICE TO THE TESTING AND/OR INSPECTION AGENCY OF THE REQUIRED WORK TO ALLOW PROPER SCHEDULING OF PERSONNEL. THE COST OF ANY RETESTING OR ADDITIONAL INSPECTIONS AS A RESULT OF FAILED TESTS AND REJECTED WORK SHALL BE BORNE BY THE CONTRACTOR.

5. THIS PROJECT REQUIRES A STRUCTURAL TESTING AND SPECIAL INSPECTION SCHEDULE, TO BE SIGNED BY THE OWNER, CONTRACTOR, ARCHITECT, STRUCTURAL ENGINEER OF RECORD AND TESTING AGENCY. REFER TO THE PROGRAM SUMMARY SCHEDULE FOR FREQUENCY OF TESTING AND INSPECTIONS.

REQUIRED SPECIAL INSPECTIONS

DESCRIPTION OF WORK IBC SECTION 1704	INSPECTION		TESTING		REMARKS
	YES	NO	YES	NO	
1. Concrete Construction (1704.4)	●		●		6A
3. Soils (1704.7)		●	●		6B
4. Steel (1704.3)	●				6C

6. SPECIAL INSPECTION WORK REQUIRED INCLUDE CONVENTIONAL TESTING NOT STRICTLY A PART OF SECTION 1704 BUT ARE REQUIRED FOR ADEQUATE QUALITY ASSURANCE AND CAN BE PROVIDED BY THE CONTRACTOR. ALL OTHER WORK MUST BE PROVIDED BY THE OWNER AS INDICATED BY THE INTERNATIONAL BUILDING CODE

6A. CONCRETE TESTING
   A. PROVIDE MIX DESIGN IN ACCORDANCE WITH ACI REQUIREMENTS.
   B. TEST CONCRETE AT THE TIME OF POURING FOR SLUMP, AIR-ENTRAINMENT, AND TEMPERATURE IN ACCORDANCE WITH THE SPECIFICATIONS.
   C. MAKE AND TEST CONCRETE CYLINDERS FOR REPRESENTATIVE STRENGTH IN ACCORDANCE WITH THE SPECIFICATIONS.
   D. PROVIDE PERIODIC VISUAL INSPECTION OF REINFORCING:
      - VISUAL INSPECTION OF 25% OF CONTINUOUS STRIP FOOTINGS PRIOR TO POUR
      - VISUAL INSPECTION OF 50% OF SLAB ON GRADE

6B. SOILS
   A. VERIFY FOOTING EXCAVATION FOR SUITABILITY FOR PLANNED FOOTING.
   B. VERIFY MATERIAL USED FOR COMPACTED BACKFILL.
   C. TEST COMPACTED BACKFILL FOR SPECIFIED COMPACTION.

6C. STEEL
   A. MATERIAL VERIFICATION OF HIGH-STRENGH BOLTS, NUTS AND WASHERS
   B. REVIEW PRE-ENGINEERED BUILDING MANUFACTURER'S CERTIFICATE OF
   C. COMPLIANCE
   D. INSPECTION OF HIGH-STRENGTH BOLTED CONNECTION TYPES
   E. MATERIAL VERIFICATION OF HIGH-STRENGH BOLTS, NUTS AND WASHERS
   F. MATERIAL VERIFICATION OF WELD FILLER MATERIALS
   G. INSPECTION OF STEEL FRAME JOINT DETAILS FOR COMPLIANCE WITH APPROVED CONSTRUCTION DOCUMENTS:
      - DETAILS SUCH AS BRACING AND STIFFENING
      - MEMBER LOCATIONS
      - APPLICATION OF DETAILS AT EACH CONNECTION

ABBREVIATIONS:

A.F.F.	ABOVE FINISH FLOOR
B.F.F.	BELOW FINISH FLOOR
B.O.S.	BOTTOM OF STEEL
C.B.	CASTELLATED BEAM
C.J.	CONTROL JOINT
CONT.	CONTINUOUS
E.F.	EACH FACE
E.J.	EXPANSION JOINT
E.W.	EACH WAY
E.O.F.	EDGE OF FOUNDATION
T-1	TRUSS
T.O.C.	TOP OF CONCRETE
∠	ANGLE
REQ'D	REQUIRED
T&B	TOP AND BOTTOM
ø	DIAMETER
A.B.	ANCHOR BOLT
℄	CENTERLINE
CMU	CONCRETE MASONRY UNIT
CONC.	CONCRETE
FDN	FOUNDATION
GALV.	GALVANIZED
T.O.F.	TOP OF FOOTING
T.O.J.	TOP OF JOIST
T.O.M.	TOP OF MASONRY
T.O.S.	TOP OF STEEL
U.N.O.	UNLESS NOTED OTHERWISE
DBA	DEFORMED BAR ANCHOR
U.N.O.	UNLESS NOTED OTHERWISE
WWF	WELDED WIRE FABRIC

LPK architects

LPK ARCHITECTS, P.A.
2208 18TH ST, SUITE D
GULFPORT, MISSISSIPPI 39501
P.O. BOX 7117
GULFPORT, MISSISSIPPI 39506
P: 228.382.3122
F: 601.693.8640

These documents are the sole property of LPK Architects P.A. and are not to reused. Any alterations, revisions or reuse of these documents without the written consent of LPK Architects will result in all sureties and responsibilities for the entire project becoming null and void.
copyright LPK Architects, P.A.

www.GSEeng.com
GSE CONSULTING ENGINEERS
Gulfport Mobile Nashville
1816 Pass Rd. Gulfport, MS 39501
(T)228-864-5050 (F)228-864-7744

PROFESSIONAL SEAL:
S. LANE SESI LICENSED PROFESSIONAL ENGINEER 25817 STATE OF MISSISSIPPI
11/10/17

REVISION	DATE		DRAWN	APPROVED

UNITED STATES AIR FORCE — AIR EDUCATION AND TRAINING COMMAND

KEESLER AIR FORCE BASE
BILOXI — MISSISSIPPI
OFFICE OF CIVIL ENGINEERS

36 AES WAREHOUSE/OFFICE

STRUCTURAL NOTES

SUBMITTED: (Chief of Contracts Design) D. KINMAN		RECOMMENDED: (Chief of Engineering) A. MARASCA	FACILITY NUMBER: XX.X
DESIGNED: AHO	CHECKED: SLS	SCALE: AS NOTED	DRAWING NUMBER: S-001
DRAWN: AHO	DATE: 10-04-17	PROJECT NUMBER: MAHG 17-9002	SHEET 1 OF 2

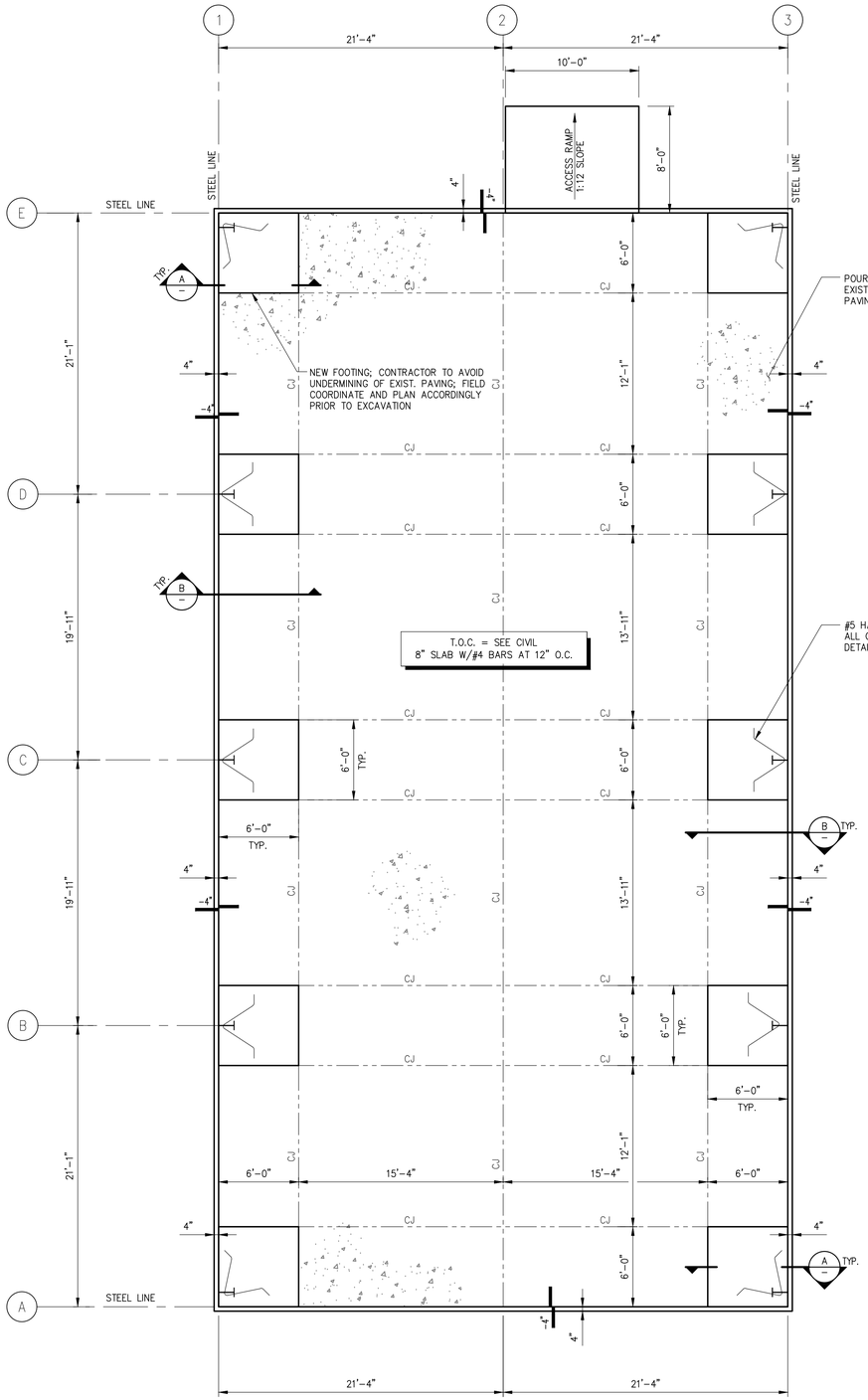

SLAB AND JOINTING PLAN

SCALE: 3/16" = 1'-0"

LEGEND

CJ ——— 2" EARLY ENTRY SAW CUT CONTROL JOINT; REFER TO DETAIL 1, THIS SHEET

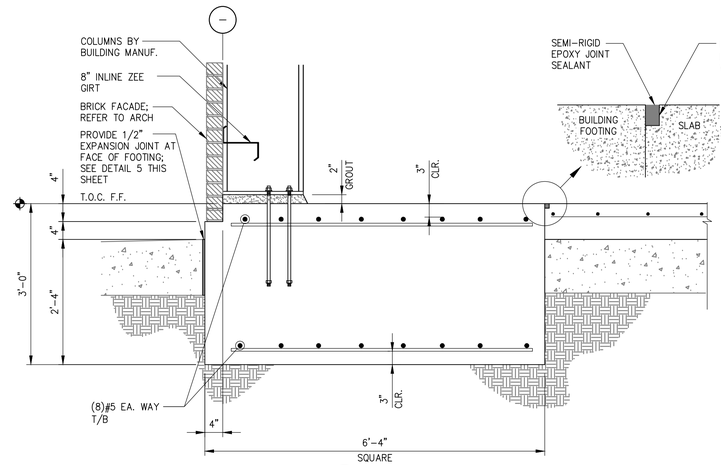

A THIS DWG. **SECTION**

SCALE: 3/4" = 1'-0"

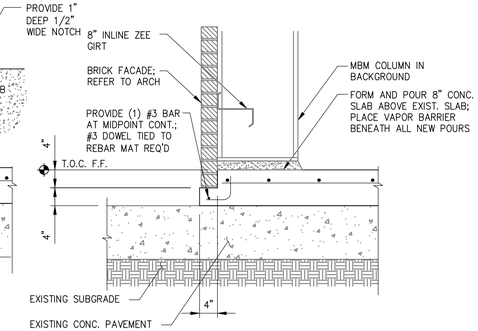

B THIS DWG. **SECTION**

SCALE: 3/4" = 1'-0"

EARLY ENTRY SAW-CUT CONTROL JOINTS TO BE PLACED WHERE INDICATED ON PLANS

TYPICAL EARLY ENTRY SAW CUT NOTES:

1. SAW CUTTING SHOULD BE PERFORMED IN GREEN CONCRETE AS SOON AS SUFFICIENT CURING HAS TAKEN PLACE TO SUPPORT THE WEIGHT OF THE OPERATOR AND SAW (USUALLY 1 HOUR IN HOT WEATHER AND A MAXIMUM OF 4 HOURS IN COLD WEATHER).
2. CUTS SHOULD BE PERFORMED USING A BLADE SPECIFICALLY DESIGNED FOR DRY EARLY ENTRY CUTTING (SOFF-CUT, CARDINAL, ETC.)

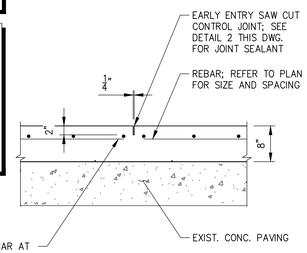

DETAIL 1
SAW-CUT CONTROL JOINTS

SCALE: 3/4" = 1'-0"

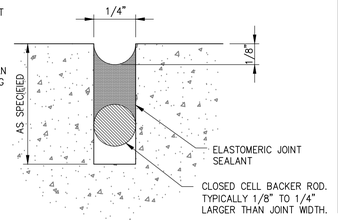

DETAIL 2
TYP. JOINT SEALANT AT SAW CUT

SCALE: NTS

TYPICAL JOINT SEALANT NOTES:

1. WAIT AS LONG AS FEASIBLE TO SEAL JOINTS TO ALLOW CONCRETE SHRINKAGE TO OCCUR. IF REQUIRED, RE-SAW JOINT IMMEDIATELY PRIOR TO INSTALLING SEALANT TO ACHIEVE A 1/4" JOINT WIDTH.
2. ENSURE JOINTS ARE CLEAN AND DRY PRIOR TO THE APPLICATION OF THE JOINT SEALANT.
3. INSTALL CLOSED CELL BACKER ROD AFTER JOINTS HAVE BEEN CLEANED AND DRIED IN ACCORDANCE WITH SEALANT MANUFACTURER'S REQUIREMENTS.
4. INSTALL BACKER ROD AT CONSISTENT AND UNIFORM DEPTH.
5. JOINT SEALANT APPLICATION SHALL BE IN STRICT COMPLIANCE WITH SEALANT MANUFACTURER'S REQUIREMENTS.

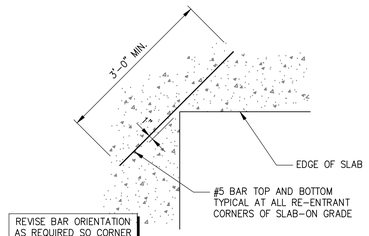

REVISE BAR ORIENTATION AS REQUIRED SO CORNER REINFORCEMENT DOES NOT CROSS CONTROL JOINTS

DETAIL 3
TYP. CORNER BAR REINF.

SCALE: 3/4" = 1'-0"

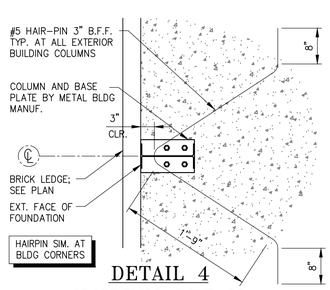

HAIRPIN SIM. AT BLDG CORNERS

DETAIL 4
HAIRPIN DETAIL

SCALE: NTS

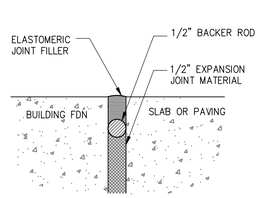

DETAIL 5
TYP. EXPANSION JOINT

SCALE: 3" = 1'-0"

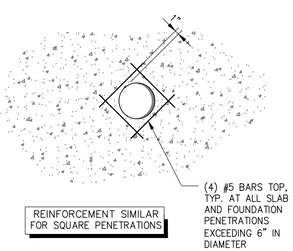

REINFORCEMENT SIMILAR FOR SQUARE PENETRATIONS

DETAIL 6
SLAB PENETRATION

SCALE: 3/4" = 1'-0"

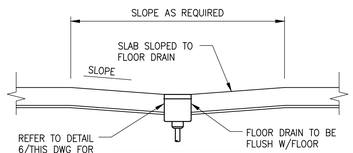

REF. PLUMBING PLAN FOR LOCATIONS OF FLOOR DRAIN

DETAIL 7
TYP. FLOOR DRAIN AND FLOOR SINK

SCALE: 3/4" = 1'-0"

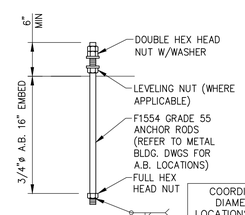

COORDINATE BOLT DIAMETERS AND LOCATIONS WITH METAL BUILDING DRAWINGS

DETAIL 8
TYP. BLDG. COLUMN ANCHOR BOLT

SCALE: 3/4"=1'-0"

LPK architects

LPK ARCHITECTS, P.A.
2208 16TH ST, SUITE D
GULFPORT, MISSISSIPPI 39501
P.O. BOX 1
GULFPORT, MISSISSIPPI 39506
P: 228.382.3122
F: 601.893.8640

These documents are the sole property of LPK Architects P.A. and are not to reused. Any alterations, revisions or reuse of these documents without the written consent of LPK Architects will result in all liabilities and responsibilities for the entire project becoming null and void.
copyright LPK Architects, P.A.

www.GSEeng.com
GSE CONSULTING ENGINEERS
Gulfport Mobile Nashville
1816 Pass Rd. Gulfport, MS 39501
(T)228-864-5050 (F)228-864-7744

PROFESSIONAL SEAL:

S. LANE SEAL — LICENSED PROFESSIONAL ENGINEER — 25517 — STATE OF MISSISSIPPI

11/10/17

REVISION	DATE	DRAWN	APPROVED

UNITED STATES AIR FORCE — AIR EDUCATION AND TRAINING COMMAND

KEESLER AIR FORCE BASE
BILOXI — MISSISSIPPI

OFFICE OF CIVIL ENGINEERS

36 AES WAREHOUSE/OFFICE

FOUNDATION PLAN, SECTIONS AND DETAILS

SUBMITTED: (Chief of Contracts Design) D. KINMAN		RECOMMENDED: (Chief of Engineering) A. MARASCA	FACILITY NUMBER: XX.X
DESIGNED: AHO	CHECKED: SLS	SCALE: AS NOTED	DRAWING NUMBER: S-101
DRAWN: AHO	DATE: 10-04-17	PROJECT NUMBER: MAHG 17-9002	SHEET 2 OF 2

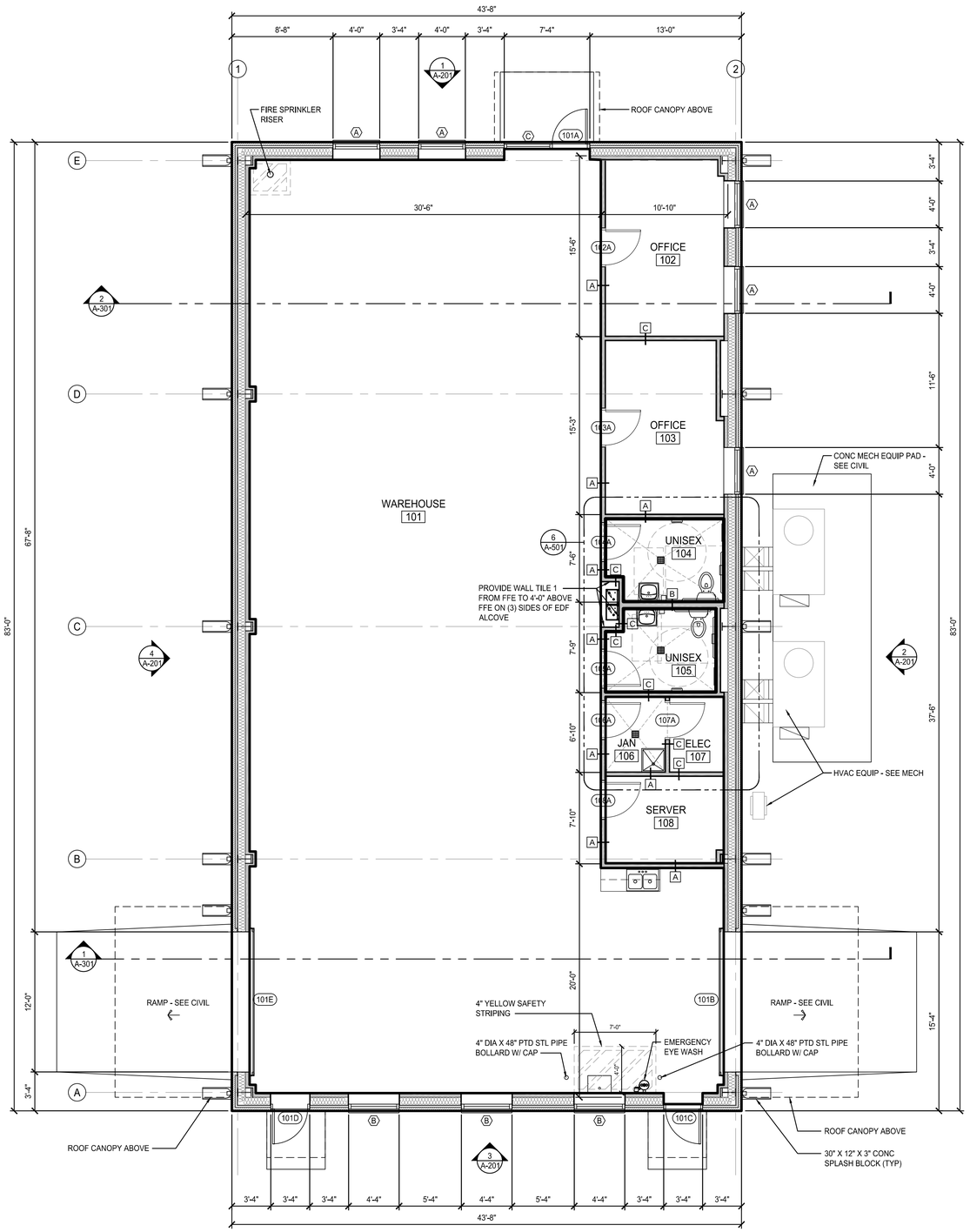

NORTH PLAN NORTH

1 FLOOR PLAN
SCALE: 3/16" = 1'-0"
3,624 GSF

FINISH SCHEDULE						
NO	ROOM NAME	FINSHES				NOTES
		FLOOR	BASE	WALL	CEILING	
101	WAREHOUSE	CONC-E	RB	PT1	-	
102	OFFICE	VCT	RB	PT1	ACT1	
103	OFFICE	VCT	RB	PT1	ACT1	
104	UNISEX	CFT1	CTB	CWT1	ACT2	
105	UNISEX	CFT1	CTB	CWT1	ACT2	
106	JANITOR	CONC-E	RB	PT1	ACT2	
107	ELECTRICAL	CONC-E	RB	PT1	ACT1	
108	SERVER	CONC-E	RB	PT1	ACT1	

FINISH LEGEND					
FINISH	KEY	MANUF	STYLE	COLOR	NOTES
FLOOR					
CERAMIC FLOOR TILE	CFT1	CROSSVILLE	ECOCYCLE AMERICANA EC116	PLYMOUTH ROCK	
CONCRETE W/ EPOXY	CONC-E	SHERWIN-WILLIAMS	ARMORSEAL 1000 HS EPOXY	LIGHT GRAY	1 COAT - ARMORSEAL 33 EPOXY PRIMER/SEALER, 2 COATS TOPCOAT, NON-SLIP
VINYL COMPOSITION TILE	VCT	MANNINGTON	ESSENTIALS	-	
BASE					
CERAMIC TILE COVE BASE	CTB	DALTILE	NATURAL HUES	CARNATIN QH48	
VINYL WALL BASE	RB	JOHNSONITE	-	20 CHARCOAL WG	6" HEIGHT
WALL					
CERAMIC TILE	CWT1	DALTILE	NATURAL HUES	CARNATIN QH48	3" X 6" W/ BULLNOSE TRIM, TILE HEIGHT=5'-6" AFF
CERAMIC TILE	CWT2	DALTILE	NATURAL HUES	ATLANTIS QH48	2" X 2" ACCENT TILE, 6" STRIP AT 4'-0" AFF
PAINT	PT1	PPG	EGGSHELL	508-3 HOSTA FLOWER	
CEILING					
ACOUSTICAL CEILING TILE	ACT-1	ARMSTRONG	CIRRUS W/ HUMIGUARD	WHITE	
MISC					
GROUT	GT-2	LATICRETE	GROUT	00 WHITE	FOR USE WITH CWT1 AND CWT2
WINDOW TREATMENTS	WB-1	HUNTER DOUGLAS	RB 500 ROLLER SHADE	PEARL	
MILLWORK	PLAM-1	WILSONART LAMINATE	-	BRAZILWOOD 7946-38	
INTERIOR DOORS	-	GRAHAM	NATURAL BIRCH	MEDIUM BROWN #300	
NOTE: ALL MANUFACTURERS AND STYLES ARE INCLUDED AS BASIS OF DESIGN. EQUAL PRODUCTS ARE TO BE PRE-APPROVED BY CONTRACTING OFFICER					

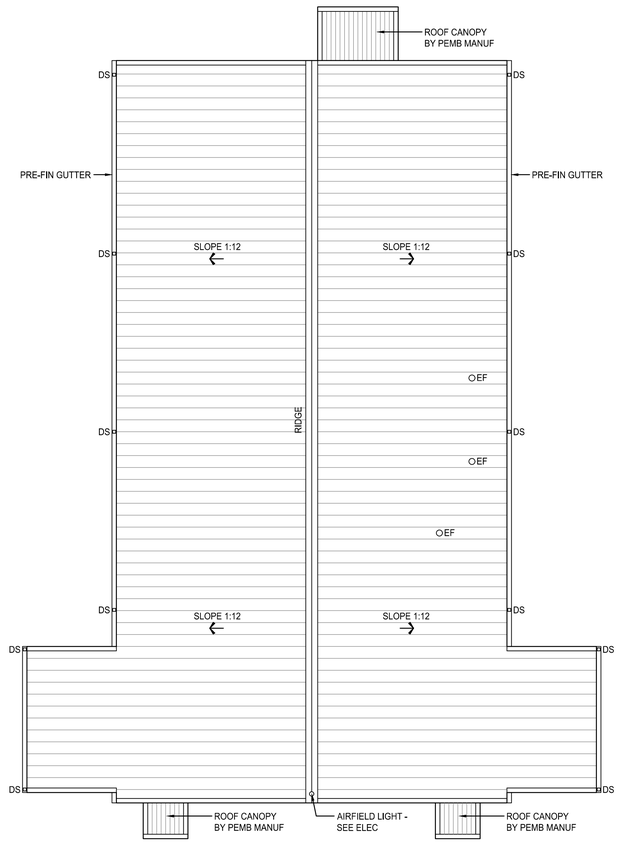

NORTH PLAN NORTH

2 ROOF PLAN
SCALE: 1/8" = 1'-0"

GENERAL FLOOR PLAN NOTES:

1. ALL INTERIOR DIMENSIONS ARE TAKEN FROM FACE OF METAL STUDS UNLESS OTHERWISE NOTED.
2. SEE SHEETS A1.1 FLOOR PLAN & A1.2 REFLECTED CEILING PLAN FOR BUILDING SECTION MARKS AND WALL SECTION MARKS.
3. SEE ELECTRICAL FOR SIZE AND TYPE OF LIGHTING. SEE A 2.1 EXTERIOR ELEVATIONS FOR POSITIONING OF LIGHTING ON EXTERIOR WALLS. SEE A1.2 FOR POSITIONING OF LIGHTS IN INTERIOR.
4. ALL METAL STUD WALLS TO BE 3-5/8" UNLESS OTHERWISE NOTED.
5. FIRE EXTINGUISHER CABINETS ARE DENOTED ON THE PLAN AS (FEC); WALL MOUNTED FIRE EXTINGUISHERS ARE DENOTED AS (FE). SEE SHEET A1.1 FOR FIRE EXTINGUISHER CABINET LOCATIONS AND FIRE EXTINGUISHER CABINET DETAILS.
6. SEE MECHANICAL FOR SIZE, GENERAL LOCATION AND TYPES OF MECHANICAL GRILLES AND LOUVERS. SEE A2.1 EXTERIOR ELEVATIONS FOR POSITIONING OF LOUVERS IN EXTERIOR WALLS. SEE BUILDING SECTIONS, REFLECTED CEILING PLAN, AND DETAILS FOR LOCATIONS OF INTERIOR MECHANICAL GRILLES.
7. INSTALL ALL EXPOSED PIPING AND CONDUITS AS HIGH AND TIGHT TO THE STRUCTURE AS POSSIBLE. COORDINATE BETWEEN TRADES TO AVOID CONFLICTS THAT WILL RESULT IN HORIZONTAL PIPING LESS THAN 10'-0" ABOVE THE FLOOR.
8. ALL DOORS TO BE SET 4" MINIMUM FROM ADJACENT CORNER UNLESS OTHERWISE NOTED.
9. PROVIDE 3-5/8" METAL STUD WALLS @ 16" OC TIGHT TO CEILING DECK WITH (1) LAYER 5/8" TYPE X GYP BD AT INTERIOR SIDE OF ALL EXTERIOR WALLS SURROUNDING RM 101 WAREHOUSE. IMPACT RESISTANT GYP BD SHALL BE USED FROM FFE TO 4'-0" ABOVE FFE.

PARTITION TYPES:

A 3-5/8" MTL STUDS @ 16" OC (MIN) W/ R-13 FIBERGLASS SOUND ATTENUATION INSUL AND (1) LAYER 5/8" TYPE X GYP BD EA SIDE PROVIDE IMPACT RESISTANT GYP BD FROM FFE TO 4'-0" ABOVE FFE ON WAREHOUSE SIDE ONLY
WALL HT = UNDERSIDE OF ROOF DECK

B 6" MTL STUDS @ 16" OC (MIN) W/ R-13 FIBERGLASS SOUND ATTENUATION INSUL AND (1) LAYER 5/8" TYPE X GYP BD EA SIDE
WALL HT = 6" ABOVE ADJACENT CEILING HT

C 3-5/8" MTL STUDS @ 16" OC (MIN) W/ R-13 FIBERGLASS SOUND ATTENUATION INSUL AND (1) LAYER 5/8" TYPE X GYP BD EA SIDE
WALL HT = 6" ABOVE ADJACENT CEILING HT

LPK

LPK ARCHITECTS, P.A.
2208 18TH ST, SUITE D
GULFPORT, MISSISSIPPI 39501
P.O. BOX 7117
GULFPORT, MISSISSIPPI 39506
P: 228.382.3122
F: 601.693.8640

These documents are the sole property of LPK Architects P.A. and are not to reused. Any alterations, revisions or reuse of these documents without the written consent of LPK Architects will result in all sureties and responsibilities for the entire project becoming null and void.

copyright LPK Architects, P.A.

www.GSEeng.com
GSE
CONSULTING ENGINEERS
Gulfport Mobile Nashville
1816 Pass Rd. Gulfport, MS 39501
(T)228-864-5050 (F)228-864-7744

PROFESSIONAL SEAL:

REGISTERED ARCHITECT John K. Olsen 6772 STATE OF MISSISSIPPI

REVISION	DATE	DRAWN	APPROVED

UNITED STATES AIR FORCE — AIR EDUCATION AND TRAINING COMMAND

KEESLER AIR FORCE BASE
BILOXI — MISSISSIPPI
OFFICE OF CIVIL ENGINEERS

36 AES WAREHOUSE/OFFICE

FLOOR PLAN, ROOF PLAN AND FINISH SCHEDULE

SUBMITTED: (Chief of Contracts Design)	RECOMMENDED: (Chief of Engineering)	FACILITY NUMBER:
D. KINMAN	A. MARASCA	XX.X
DESIGNED: JKO	CHECKED: JKO	SCALE: VARIES	DRAWING NUMBER: A-101
DRAWN: JKO	DATE: 10-10-17	PROJECT NUMBER: MAHG 17-9002	SHEET X OF X

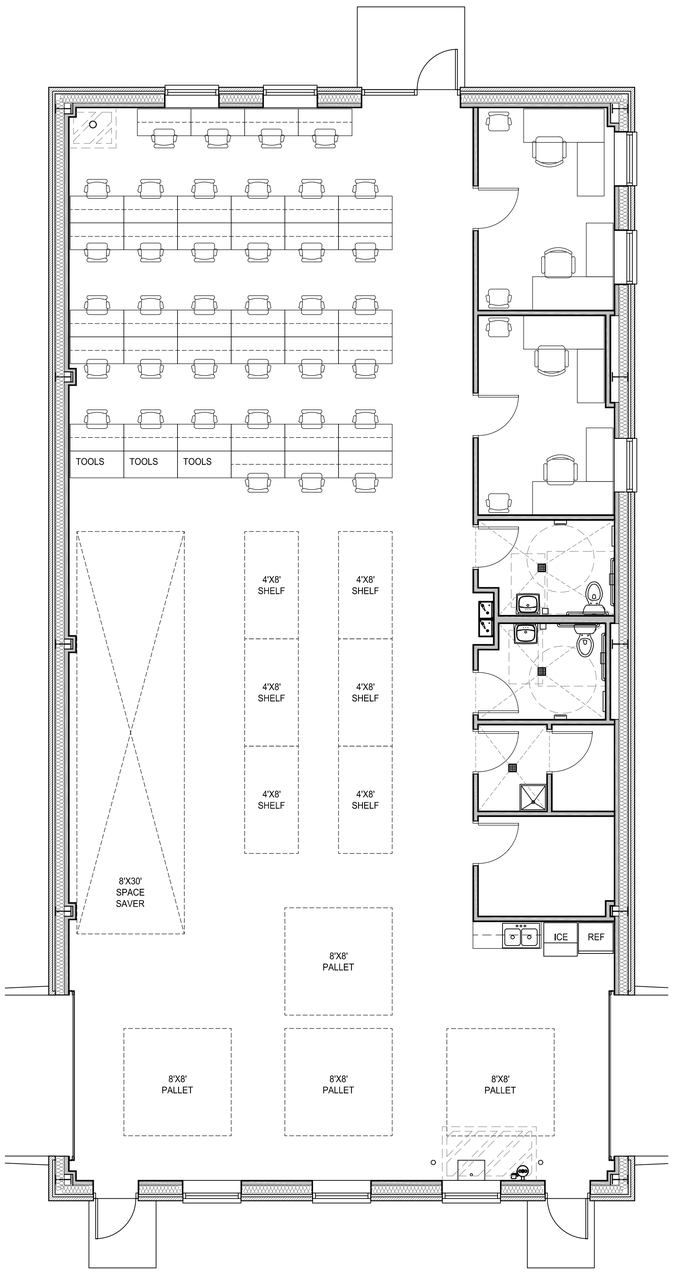

NORTH PLAN NORTH

1 EQUIPMENT PLAN
SCALE: 3/16" = 1'-0"

NOTE: ALL EQUIPMENT IDICATED ON THIS PLAN IS OWNER FURNISHED AND OWNER INSTALLED (OFOI) AND IS FOR REFERENCE PURPOSES ONLY

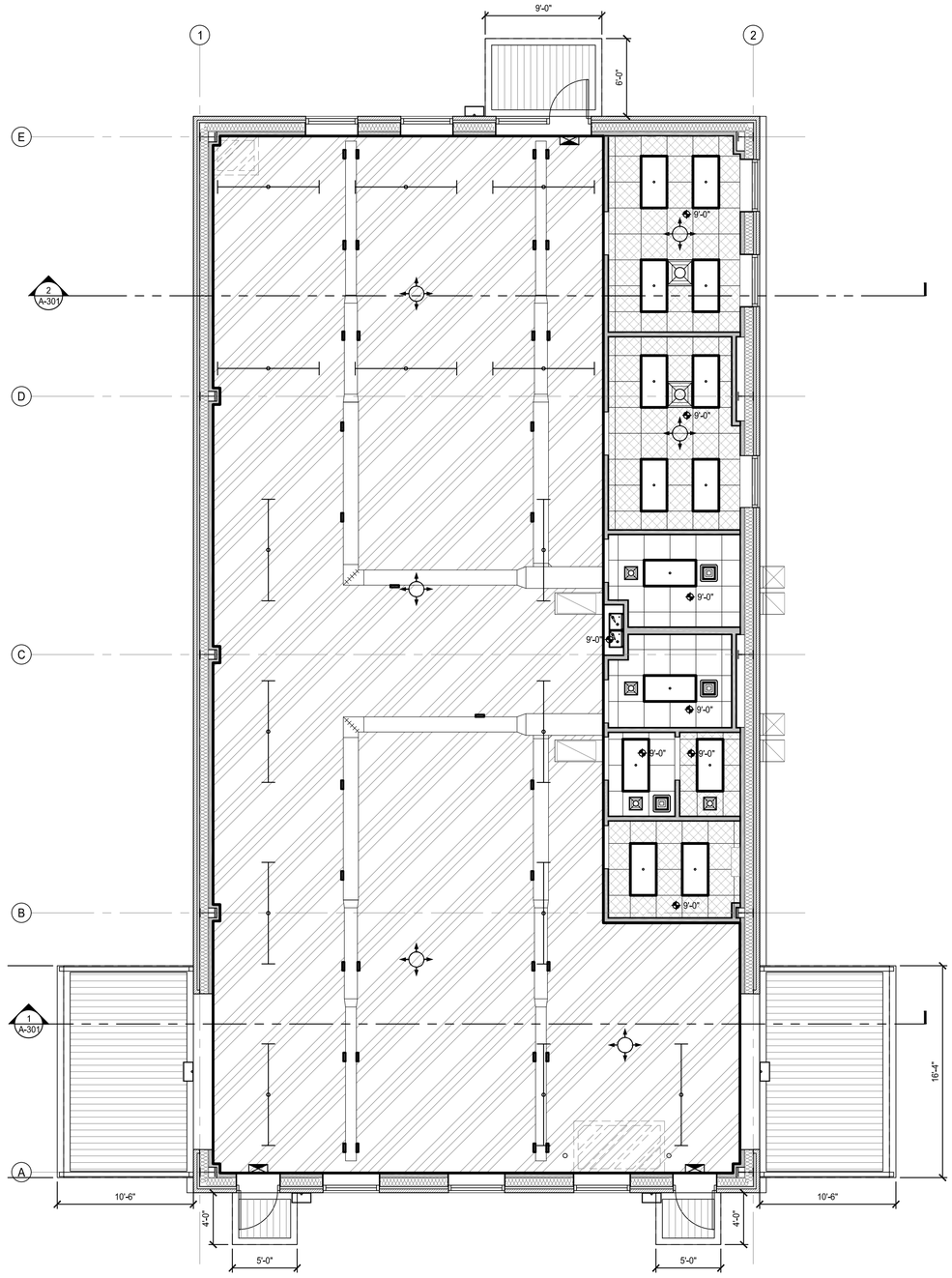

NORTH PLAN NORTH

2 REFLECTED CEILING PLAN
SCALE: 3/16" = 1'-0"

GENERAL REFLECTED CEILING PLAN NOTES:

1. CONTRACTOR TO COORDINATE WITH MECHANICAL & ELECTRICAL DRAWINGS FOR SIZE, TYPE AND QUANTITY OF ITEMS LOCATED IN CEILINGS AND FOR ALL COMPONENTS NOT SHOWN ON THIS SHEET. REFER TO ARCHITECTURAL FOR FINAL INSTALLATION LOCATIONS.
2. THE CONTRACTOR SHALL VERIFY THAT ACCESS PANELS OF APPROPRIATE SIZE & TYPE ARE INSTALLED IN GYP BD CEILINGS OR SOFFITS, AND IN OTHER NON-ACCESSIBLE TYPE CEILINGS OR SOFFITS WHERE ACCESS, SERVICE, OR ADJUSTMENT TO MECHANICAL, PLUMBING, FIRE PROTECTION, OR ELECTRICAL SYSTEMS MAY BE REQUIRED. THE CONTRACTOR SHALL TAKE SPECIAL CARE TO LOCATE ALL SYSTEM COMPONENTS, ETC. REQUIRING ACCESS ABOVE ACCESSIBLE CEILINGS. LOCATION(S) OF ALL ACCESS PANELS TO BE APPROVED BY CONTRACTING OFFICER PRIOR TO INSTALLATION.
3. THE CONTRACTOR SHALL ADVISE THE OWNER THAT ITEMS SHALL NOT BE PLACED OR STORED ON TOP OF SUCH SHELVING SO THAT THE CODE REQUIRED 18" VERTICAL CLEARANCE IS MAINTAINED BETWEEN THE SHELVING AND THE CEILING.
4. CONTRACTOR SHALL INSTALL GRID ALIGNED THROUGH DOORWAYS AND CENTERED ON CORRIDORS UNLESS NOTED OTHERWISE (UNO). START GRID LAYOUT WITH DIMENSIONS AS SHOWN ON PLANS.
5. CONTRACTOR SHALL INSTALL SOUND ATTENUATION BLANKETS ABOVE ALL CEILINGS.
6. CONTRACTOR SHALL COORDINATE CEILING HEIGHTS AND INSTALLATION OF CEILING AND ABOVE-CEILING COMPONENTS WITH ALL TRADES AND REPORT ANY CONFLICTS TO THE CONTRACTING OFFICER IMMEDIATELY. CONTRACTOR IS RESPONSIBLE FOR COORDINATION.
7. COORDINATE ALL CEILING COMPONENTS W/ THE ENTIRE CONSTRUCTION DOCUMENTS SET.
8. WHERE ACT UNITS LESS THAN 6" WIDE WOULD OCCUR AT EDGES OF ROOM WITH 24" X 242" PATTERN, PROVIDE 24" X 48" PANELS CUT TO EXTEND TO WALL, ELIMINATING THE TEE NEAR THE WALL.
9. ALL CAN LIGHTS TO BE CENTERED WITHIN 2X2 GRID WHERE APPLICABLE.
10. FINAL MOUNTING HEIGHT OF ANY SUSPENDED FIXTURES TO BE DETERMINED BY OWNER IN FIELD.

LEGEND

- 2' X 2' ACOUSTICAL CEILING TILE 1
- 2' X 2' ACOUSTICAL CEILING TILE 2 MOISTURE RESISTANT
- OPEN TO STRUCTURE ABOVE
- HVAC SUPPLY - SEE MECH
- HVAC RETURN - SEE MECH
- HVAC SIDEWALL RETURN - SEE MECH
- HVAC SIDEWALL SUPPLY - SEE MECH
- 2' X 4' RECESSED LAY-IN FIXTURE - SEE ELEC
- WALL MOUNTED FIXTURE - SEE ELEC
- RECESSED CAN LIGHT - SEE ELEC
- EXIT LIGHT - SEE ELEC
- PENDANT MOUNT FIXTURE - SEE ELEC

LPK

LPK ARCHITECTS, P.A.
2206 18TH ST, SUITE D
GULFPORT, MISSISSIPPI 39501
P.O. BOX 7117
GULFPORT, MISSISSIPPI 39506
P: 228.382.3122
F: 601.693.8640

These documents are the sole property of LPK Architects P.A. and are not to reused. Any alterations, revisions or reuse of these documents without the written consent of LPK Architects will result in all sureties and responsibilities for the entire project becoming null and void.

copyright LPK Architects, P.A.

www.GSEeng.com
GSE
CONSULTING ENGINEERS
Gulfport Mobile Nashville
1816 Pass Rd. Gulfport, MS 39501
(T)228-864-5050 (F)228-864-7744

PROFESSIONAL SEAL:

REGISTERED ARCHITECT John K. Olsen 4772 STATE OF MISSISSIPPI

REVISION	DATE	DRAWN	APPROVED

UNITED STATES AIR FORCE
AIR EDUCATION AND TRAINING COMMAND
KEESLER AIR FORCE BASE
BILOXI — MISSISSIPPI
OFFICE OF CIVIL ENGINEERS

36 AES WAREHOUSE/OFFICE

EQUIPMENT PLAN AND REFLECTED CEILING PLAN

SUBMITTED: (Chief of Contracts Design) D. KINMAN	RECOMMENDED: (Chief of Engineering) A. MARASCA		FACILITY NUMBER: XXX
DESIGNED: JKO	CHECKED: JKO	SCALE: VARIES	DRAWING NUMBER: A-102
DRAWN: JKO	DATE: 10-10-17	PROJECT NUMBER: MAHG 17-9002	SHEET X OF X

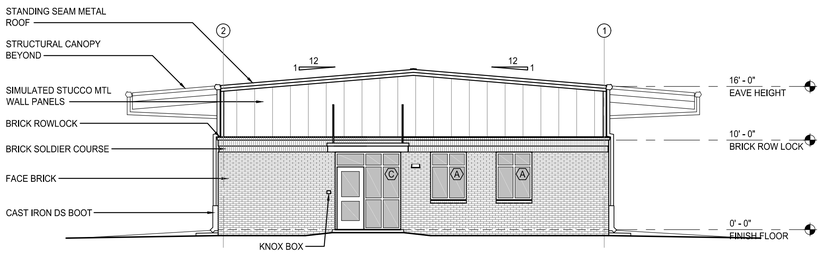

1 NORTH ELEVATION
SCALE: 1/8" = 1'-0"

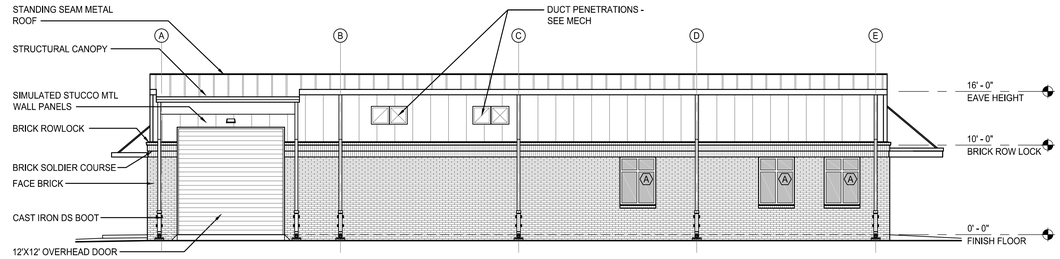

2 EAST ELEVATION
SCALE: 1/8" = 1'-0"

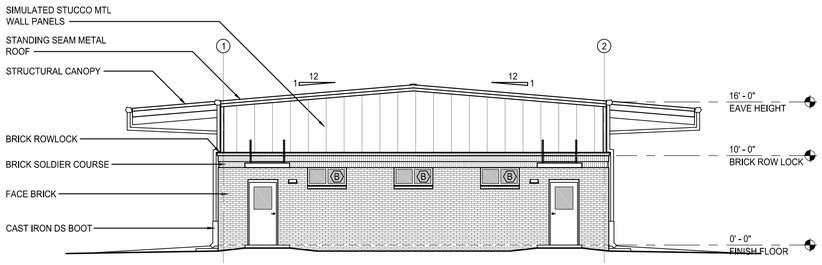

3 SOUTH ELEVATION
SCALE: 1/8" = 1'-0"

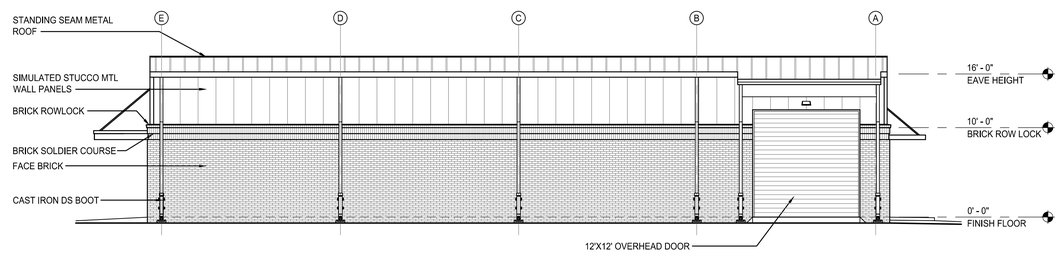

4 WEST ELEVATION
SCALE: 1/8" = 1'-0"

EXTERIOR ELEVATIONS NOTES:

1. BRICK SHALL MATCH KEESLER AFB INSTALLATION STANDARD COLOR AND TEXTURE. MATCH SURROUNDING BASE STANDARD - VERIFY WITH CONTRACTING OFFICER.
2. SIMULATED STUCCO METAL PANELS SHALL BE EQUAL TO KINGSPAN SERIES "300 GRANITESTONE" (SIDING AND TRIM) SHALL BE FACTORY FINISHED WITH THE MANUFACTURER'S STANDARD PAINT COLORS TO MATCH SURROUNDING BASE STANDARD - VERIFY WITH CONTRACTING OFFICER.
3. MATCH THE KEESLER AFB STANDARD PAINT SCHEME AS CLOSELY AS POSSIBLE. CONSULT WITH CONTRACTING OFFICER.
4. STANDING SEAM METAL ROOF AND TRIM SHALL BE MEDIUM BRONZE.
5. WINDOW AND DOOR FRAMES SHALL BE MEDIUM BRONZE.

LPK

LPK ARCHITECTS, P.A.
2206 18TH ST., SUITE D
GULFPORT, MISSISSIPPI 39501
P.O. BOX 7117
GULFPORT, MISSISSIPPI 39506
P: 228.382.3122
F: 601.693.8640

These documents are the sole property of LPK Architects P.A. and are not to reused. Any alterations, revisions or reuse of these documents without the written consent of LPK Architects will result in all sureties and responsibilities for the entire project becoming null and void.

copyright LPK Architects, P.A.

www.GSEeng.com
GSE
CONSULTING ENGINEERS
Gulfport Mobile Nashville
1816 Pass Rd. Gulfport, MS 39501
(T)228-864-5050 (F)228-864-7744

PROFESSIONAL SEAL:

REVISION	DATE		DRAWN	APPROVED

UNITED STATES AIR FORCE — AIR EDUCATION AND TRAINING COMMAND

KEESLER AIR FORCE BASE
BILOXI — MISSISSIPPI

OFFICE OF CIVIL ENGINEERS

36 AES WAREHOUSE/OFFICE

ELEVATIONS

SUBMITTED: (Chief of Contracts Design)	RECOMMENDED: (Chief of Engineering)	FACILITY NUMBER:
D. KINMAN	A. MARASCA	XX.X
DESIGNED: JKO / CHECKED: JKO	SCALE: VARIES	DRAWING NUMBER: A-201
DRAWN: JKO	DATE: 10-10-17	PROJECT NUMBER: MAHG 17-9002

SHEET X OF X

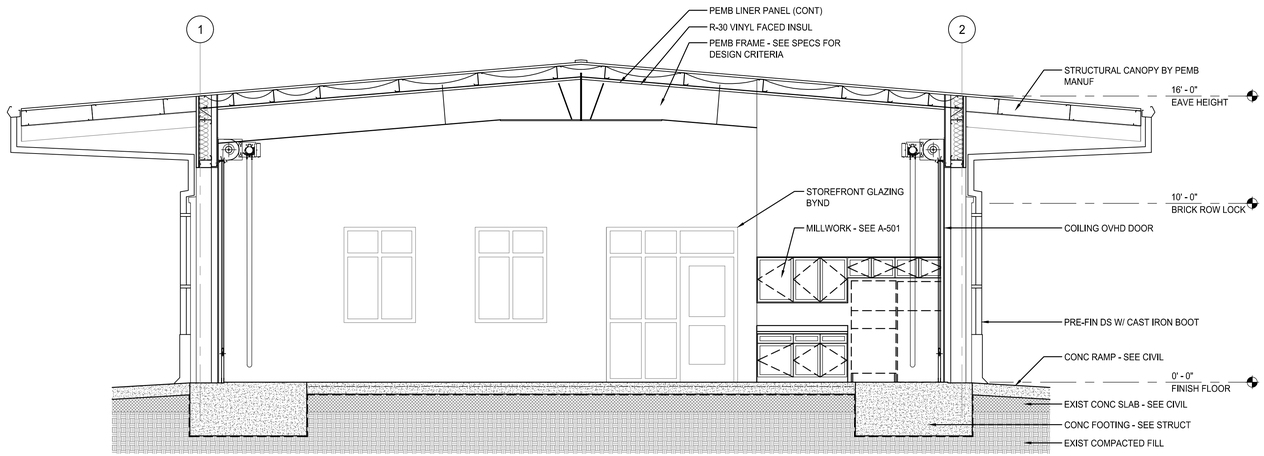

1 BUILDING SECTION
SCALE: 1/4" = 1'-0"

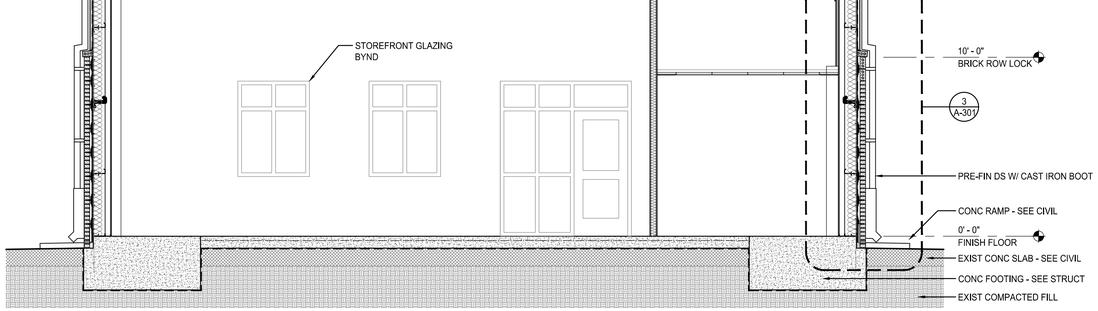

2 BUILDING SECTION
SCALE: 1/4" = 1'-0"

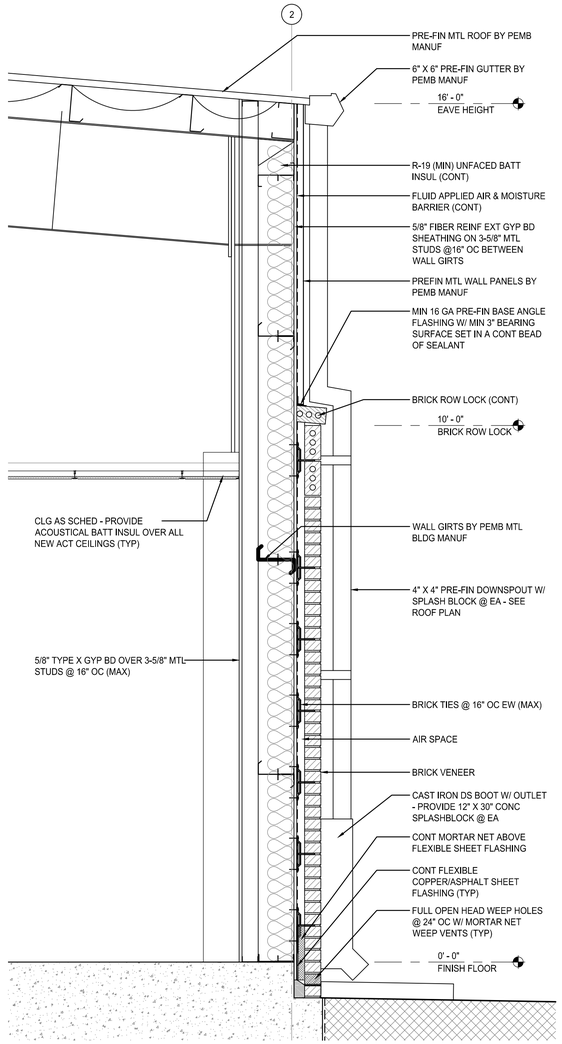

3 WALL SECTION
SCALE: 3/4" = 1'-0"

LPK

LPK ARCHITECTS, P.A.
2208 18TH ST., SUITE D
GULFPORT, MISSISSIPPI 39501
P.O. BOX 7117
GULFPORT, MISSISSIPPI 39506
P: 228.382.3122
F: 601.693.8640

These documents are the sole property of LPK Architects P.A. and are not to reused. Any alterations, revisions or reuse of these documents without the written consent of LPK Architects will result in all sureties and responsibilities for the entire project becoming null and void.

copyright LPK Architects, P.A.

www.GSEeng.com
GSE
CONSULTING ENGINEERS
Gulfport Mobile Nashville
1816 Pass Rd. Gulfport, MS 39501
(T)228-864-5050 (F)228-864-7744

PROFESSIONAL SEAL:

REGISTERED ARCHITECT
John K. Olsen, Jr.
4772
STATE OF MISSISSIPPI

REVISION	DATE		DRAWN	APPROVED

UNITED STATES AIR FORCE — AIR EDUCATION AND TRAINING COMMAND

KEESLER AIR FORCE BASE
BILOXI — MISSISSIPPI

OFFICE OF CIVIL ENGINEERS

36 AES WAREHOUSE/OFFICE

BUILDING SECTION AND WALLSECTION

SUBMITTED: (Chief of Contracts Design) D. KINMAN		RECOMMENDED: (Chief of Engineering) A. MARASCA	FACILITY NUMBER: XX.X
DESIGNED: JKO	CHECKED: JKO	SCALE: VARIES	DRAWING NUMBER: A-301
DRAWN: JKO	DATE: 10-10-17	PROJECT NUMBER: MAHG 17-9002	SHEET X OF X

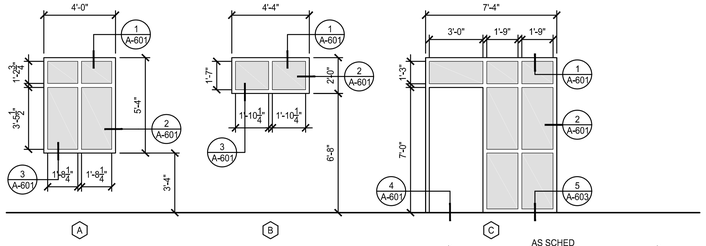

1 WINDOW TYPES
SCALE: 1/4" = 1'-0"

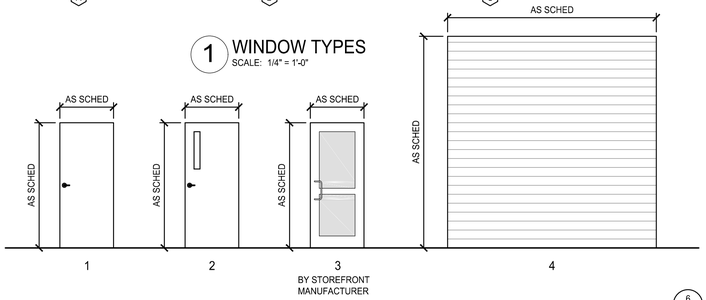

2 DOOR TYPES
SCALE: 1/4" = 1'-0"

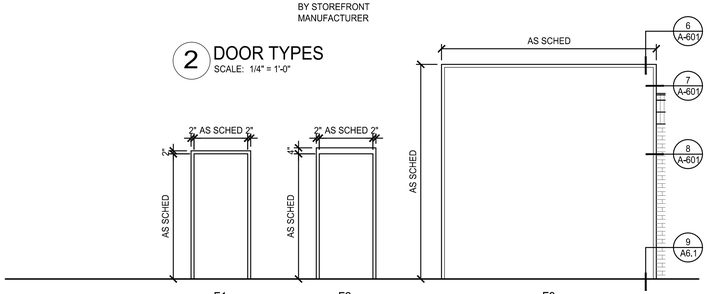

3 DOOR FRAME TYPES
SCALE: 1/4" = 1'-0"

WINDOW TYPES GENERAL NOTES:

1. ALL FRAMES 2-1/2" IMPACT RESISTANT UNO.
2. ALL GLAZING IN EXTERIOR ALUMINUM-FRAMED ENTRANCES AND STOREFRONTS AND ALUMINUM WINDOWS SHALL BE 1-5/8" WINDBORNE-DEBRIS-IMPACT-RESISTANT LAMINATED GLASS.
3. ALL WINDOWS TO RECEIVE 2" BLINDS.

DOOR SCHEDULE KEY NOTES:

1. PROVIDE SIMPLEX 5-BUTTON COMBINATION LOCK OR EQUAL (COMPATIBLE WITH PANIC DEVICES).

DOOR SCHEDULE GENERAL NOTES:

1. ALL EXTERIOR DOORS, FRAMES AND HARDWARE SHALL BE INSTALLED AS REQUIRED TO MEET OR EXCEED APPLICABLE WIND LOADS AND LOCAL HURRICANE CODES - SEE STRUCTURAL. REFER TO DOOR MANUFACTURER'S INSTRUCTIONS AND RECOMMENDATIONS.
2. LEVEL OF PROTECTION IS "VERY LOW" UFC 4-010-01 DOD MINIMUM ANTITERRORISM STANDARDS FOR BUILDINGS, WITH CHANGE 1, OCTOBER 2013, TABLE 2-1. WINDOW GLAZING IS "LOW HAZARD RATING" AND DOORS ARE "CATEGORY IV". WINDOWS SHALL MEET STANDARD 10. EXTERIOR DOORS INCLUDING SIDELIGHTS AND TRANSOMS SHALL MEET STANDARD 12. SEE UFC 4-010-02, FOR THE SPECIFIC EXPLOSIVE WEIGHTS (POUNDS / KG OF TNT) ASSOCIATED WITH EXPLOSIVE WEIGHTS I AND II.
3. INTERIOR DOOR HARDWARE TO BE LEVER ACTION W/ INTERCHANGEABLE CORES.
4. DIMENSIONS PROVIDED ON PLANS & SCHEDULE ARE NOMINAL. COORDINATE DIMENSIONS IN THE FIELD FOR FRAME AND ROUGH OPENINGS PRIOR TO FABRICATION & CONSTRUCTION.
5. DOOR HANDLES SHALL BE MOUNTED @ 38" AFF UNO.
6. ALL INTERIOR DOORS SHALL HAVE WALL OR FLOOR STOPS TO MATCH HARDWARE FINISH UNO.
7. DOORS SHALL BE NOMINALLY UNDERCUT TO ACCEPT FINAL FLOOR FINISH.
8. OUTSIDE OF DOOR FRAME SHALL BE SET 4" FROM ADJACENT WALL OR PARTITION UNO.
9. FLOOR FINISH TRANSITIONS AT DOORS SHALL OCCUR DIRECTLY BELOW THE CENTERLINE OF THE DOOR LEAF.
10. EXTERIOR EXIT/ENTRANCE DOORS SHALL BE ADA ACCESSIBLE. SLOPE FINISH PAVING FROM FLUSH WITH FLOOR FINISH TO PUBLIC WAY ACCESS NOT TO EXCEED 1:20.
11. PROVIDE WEATHERSTRIP AT EXTERIOR DOORS.
12. DOOR HARDWARE SHALL COMPLY WITH THE MOST CURRENT LOCALLY ADOPTED VERSION OF THE AMERICANS WITH DISABILITIES ACT, INCLUDING, BUT NOT LIMITED TO: A) MAX 1/2" THRESHOLD WITH 1:20 SLOPE. B) PUSH/PULL HANDLES OR LEVER HANDLES. C) DOOR CLOSERS MEET ADA FORCE AND SWEEP PERIOD REQUIREMENTS.
13. LOCATE ALL DOOR CLOSERS ON INTERIOR ROOM SIDE OF DOOR.
14. ALL DOORS TO BE 1-3/4" THICK UNO.
15. COORDINATE ALL ELECTRICAL HARDWARE REQUIREMENTS WITH ELECTRICAL DRAWINGS & SPECIFICATIONS. SEE ELECTRICAL FOR HARDWARE REQUIREMENTS WHERE NOTED TO RECEIVE ACCESS CONTROL.
16. OVERHEAD COILING DOOR COMPONENT FINISH SHALL BE EQUAL TO "ARMORBRITE" POWDER COAT SYSTEM. COLOR SHALL BE SELECTED BY CONTRACTING OFFICER FROM FULL RANGE OF INDUSTRY COLORS AND DENSITIES.
17. DOOR TYPE 2 VIEW LITE SHALL BE 1/4" SAFETY GLASS.
18. HARDWARE SETS LISTED ARE BASIS OF DESIGN. COORDINATE FINAL HARDWARE SCHEDULE WITH CONTRACTING OFFICER.

DOOR SCHEDULE

MARK	DOOR SIZE W	DOOR SIZE PAIR	DOOR SIZE TOTAL W	DOOR SIZE HT	DOOR ELEV	DOOR MATL	FRAME ELEV	FRAME MATL	FRAME DETAILS HEAD	FRAME DETAILS JAMB	FRAME DETAILS SILL	FIRE RATING	HARDWARE SET	NOTES
101A	3'-0"	-	3'-0"	7'-0"	3	AL	C	AL	1/A-601	2/A-601	4&5/A-601	-	1	1
101B	12'-0"	-	12'-0"	12'-0"	4	GHM	F3	GHM	6/A-601	7&8/A-601	9/A-601	-	5	
101C	3'-0"	-	3'-0"	7'-0"	2	GHM	F2	GHM	12/A-601	13/A-601	-	-	2	
101D	3'-0"	-	3'-0"	7'-0"	2	GHM	F2	GHM	12/A-601	13/A-601	-	-	2	
101E	12'-0"	-	12'-0"	12'-0"	4	GHM	F3	GHM	6/A-601	7&8/A-601	9/A-601	-	5	
102A	3'-0"	-	3'-0"	7'-0"	2	WD	F1	HM	10/A-601	11/A-601	-	-	3	
103A	3'-0"	-	3'-0"	7'-0"	2	WD	F1	HM	10/A-601	11/A-601	-	-	3	
104A	3'-0"	-	3'-0"	7'-0"	1	WD	F1	HM	10/A-601	11/A-601	-	-	4	
105A	3'-0"	-	3'-0"	7'-0"	1	WD	F1	HM	10/A-601	11/A-601	-	-	4	
106A	3'-0"	-	3'-0"	7'-0"	1	WD	F1	HM	10/A-601	11/A-601	-	-	3	
107A	3'-0"	-	3'-0"	7'-0"	1	WD	F1	HM	10/A-601	11/A-601	-	-	3	
108A	3'-0"	-	3'-0"	7'-0"	1	WD	F1	HM	10/A-601	11/A-601	-	-	3	

HARDWARE SCHEDULE

HEADING #: 1		
1 EACH 112 HD CL	CONTINUOUS HINGE	IVES
1 EACH CO-100-CY-70-KP-SPA-626-BD-LHR	KEYPAD LOCK	SCHLAGE
1 EACH CB849 626	SFIC CORE "F" KEYWAY	FALCON
1 EACH SC71 DA 689	DOOR CLOSER/STOP	FALCON
1 EACH 65A 36"	THRESHOLD	ZERO
1 SET 8303A 36 X 84	W/STRIPPING	ZERO
HEADING #: 2		
3 EACH 5BB1 4.5 X 4.5 NRP 630	HINGES	IVES
1 EACH HH-25-R-L-630	HURRICANE CODE EXIT DEVICE	FALCON
1 EACH C987 626	SFIC MORTISE HOUSING	FALCON
1 EACH CB849 626	SFIC CORE "F" KEYWAY	FALCON
1 EACH SC71 DS 689	DOOR CLOSER/STOP	FALCON
1 EACH 65A 36"	THRESHOLD	ZERO
1 SET 8303A 36 X 84	W/STRIPPING	ZERO
HEADING #: 3		
3 EACH 5BB1 4.5 X 4.5 652	HINGES	IVES
1 EACH T511 BDC DAN 626	OFFICE LOCK	FALCON
1 EACH CB849 626	SFIC CORE "F" KEYWAY	FALCON
1 EACH WS407-CCV 32D	WALL STOP	IVES
3 EACH SR64	SILENCERS	IVES
HEADING #: 4		
3 EACH 5BB1 4.5 X 4.5 652	HINGES	IVES
1 EACH T301S DAN 626	PRIVACY LOCK	FALCON
1 EACH SC71 RW/PA 689	DOOR CLOSER	FALCON
1 EACH 8400 8 X 34 32D	KICK PLATE	IVES
1 EACH WS407-CCV 32D	WALL STOP	IVES
1 EACH SR64	SILENCERS	IVES
HEADING #: 5		
ALL HARDWARE BY OVERHEAD DOOR SUPPLIER		
NOTE: INCLUDE 1 EACH KEY CABINET # 201-8030-03 KEY CAPACITY 30		

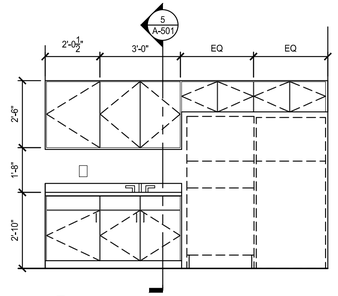

4 MILLWORK ELEVATION
SCALE: 3/8" = 1'-0"

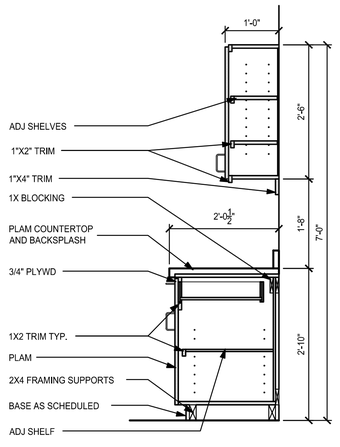

5 MILLWORK SECTION
SCALE: 3/4" = 1'-0"

MILLWORK NOTES:

1. ALL SURFACES EXPOSED TO VIEW SHALL BE FINISHED INCLUDEING ENDS ADJACENT TO REFRIGERATORS.
2. ALL EXPOSED SURFACES OF CABINET SHALL BE COVERED IN PLAM UNO.
3. ALL DOORS, CABINET BOTTOMS, SHELVES, SIDE, VERTICAL DIVIDERS, AND TOPS SHALL BE CONSTRUCTED OF 3/4" PLYWD COVERED IN PLAM.

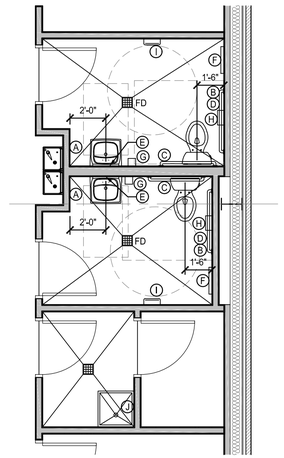

6 ENLARGED FLOOR PLAN
SCALE: 1/4" = 1'-0"

TOILET ACCESSORY SCHEDULE:

A. FTD - FACIAL TISSUE DISPENSER
B. GB - GRAB BAR - 42", 1-1/2" DIAMETER
C. GB - GRAB BAR - 36, 1-1/2" DIAMETER
D. GB - GRAB BAR - 18", 1-1/2" DIAMETER
E. MM - MIRROR, METAL
F. SND - SANITARY NAPKIN DISPOSER
G. SD - SOAP DISPENSER
H. TTD - TOILET TISSUE DISPENSER
I. WR - WASTE RECEPTACLE
J. MH - MOP AND BROOM HOLDER

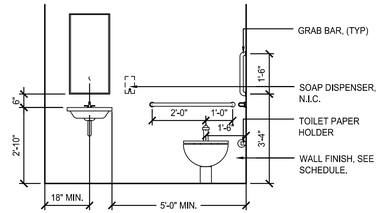

7 RESTROOM INTERIOR ELEVATION (TYP)
SCALE: 3/8" = 1'-0"

NOTES:
1. INTERIOR FINISHES ARE NOT SHOWN. THE ELEVATION IS INTENDED TO SHOW ADA REQUIREMENTS ONLY.
2. ELEVATION MAY BE SIMILAR BUT OPPOSITE. VERIFY WITH FLOOR PLAN.
3. PROVIDE BLOCKING AS REQUIRED AT ALL WALL MOUNTED ACCESSORIES. MATCH MANUF. RECOMMENDATIONS FOR ALL ITEMS.

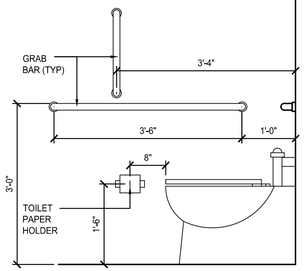

8 ADA TOILET SIDE
SCALE: 3/4" = 1'-0"

NOTES:
1. INTERIOR FINISHES ARE NOT SHOWN. THE ELEVATION IS INTENDED TO SHOW ADA REQUIREMENTS ONLY.
2. ELEVATION MAY BE SIMILAR BUT OPPOSITE. VERIFY WITH FLOOR PLAN.

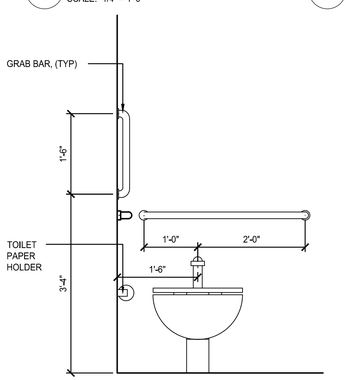

9 ADA TOILET FRONT
SCALE: 3/4" = 1'-0"

NOTES:
1. INTERIOR FINISHES ARE NOT SHOWN. THE ELEVATION IS INTENDED TO SHOW ADA REQUIREMENTS ONLY.
2. ELEVATION MAY BE SIMILAR BUT OPPOSITE. VERIFY WITH FLOOR PLAN.

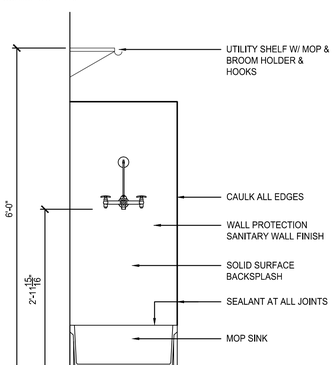

10 MOP SINK INTERIOR ELEVATION
SCALE: 3/4" = 1'-0"

LPK

LPK ARCHITECTS, P.A.
2208 18TH ST, SUITE D
GULFPORT, MISSISSIPPI 39501
P.O. BOX 7317
GULFPORT, MISSISSIPPI 39506
P: 228.382.3122
F: 601.693.8640

These documents are the sole property of LPK Architects P.A. and are not to reused. Any alterations, revisions or reuse of these documents without the written consent of LPK Architects will result in all sureties and responsibilities for the entire project becoming null and void.

copyright LPK Architects, P.A.

www.GSEeng.com
GSE
CONSULTING ENGINEERS
Gulfport Mobile Nashville
1816 Pass Rd. Gulfport, MS 39501
(T)228-864-5050 (F)228-864-7744

PROFESSIONAL SEAL:

REVISION	DATE	DRAWN	APPROVED

UNITED STATES AIR FORCE — AIR EDUCATION AND TRAINING COMMAND

KEESLER AIR FORCE BASE
BILOXI — MISSISSIPPI

OFFICE OF CIVIL ENGINEERS

36 AES WAREHOUSE/OFFICE

OPENING SCHEDULE, FRAME TYPES, DOOR TYPES, ENLARGED TOILET PLAN AND TOILET ELEVATIONS

SUBMITTED: (Chief of Contracts Design) D. KINMAN		RECOMMENDED: (Chief of Engineering) A. MARASCA	FACILITY NUMBER: XX.X
DESIGNED: JKO	CHECKED: JKO	SCALE: VARIES	DRAWING NUMBER: A-501
DRAWN: JKO	DATE: 10-10-17	PROJECT NUMBER: MAHG 17-9002	SHEET X OF X

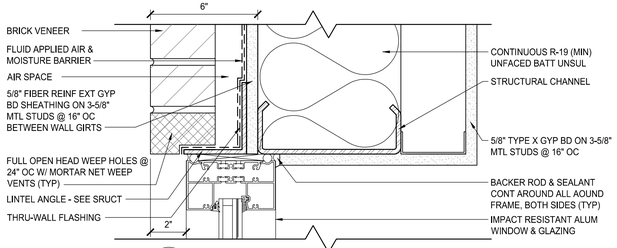

1 WINDOW HEAD
SCALE: 3" = 1'-0"

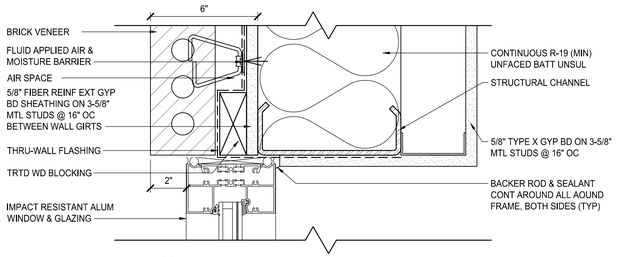

2 WINDOW JAMB
SCALE: 3" = 1'-0"

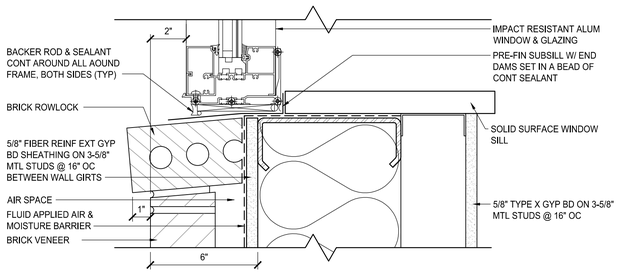

3 WINDOW SILL
SCALE: 3" = 1'-0"

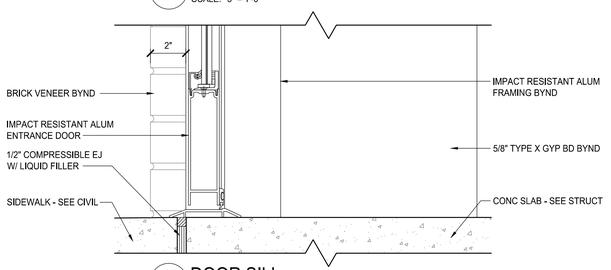

4 DOOR SILL
SCALE: 3" = 1'-0"

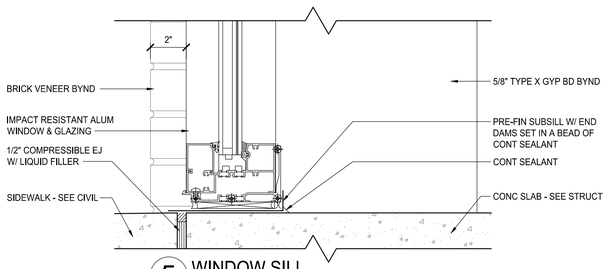

5 WINDOW SILL
SCALE: 3" = 1'-0"

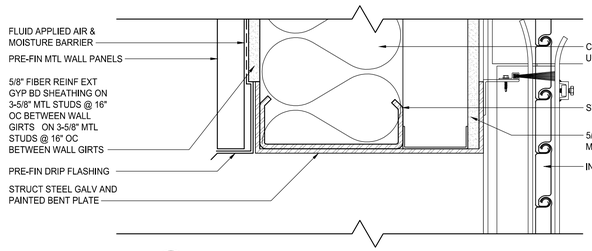

6 OVERHEAD DOOR HEAD
SCALE: 3" = 1'-0"

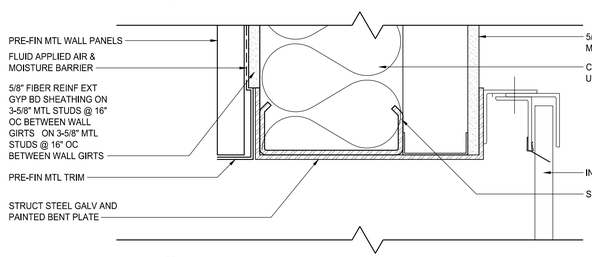

7 OVERHEAD DOOR JAMB
SCALE: 3" = 1'-0"

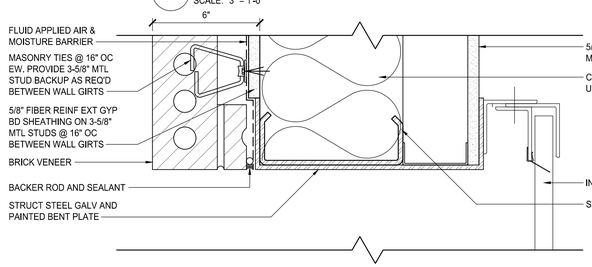

8 OVERHEAD DOOR JAMB
SCALE: 3" = 1'-0"

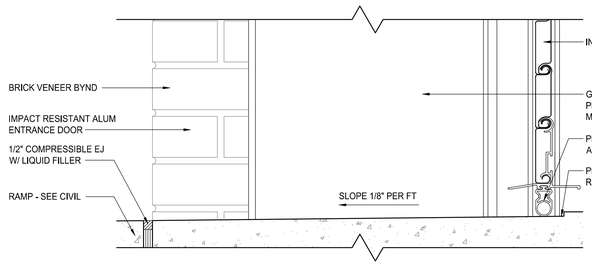

9 OVERHEAD DOOR SILL
SCALE: 3" = 1'-0"

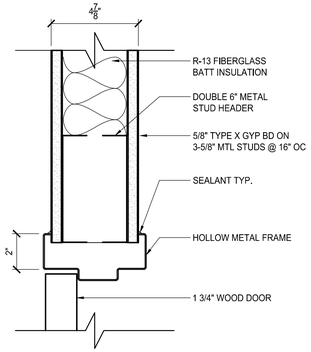

10 INTERIOR DOOR HEAD
SCALE: 3" = 1'-0"

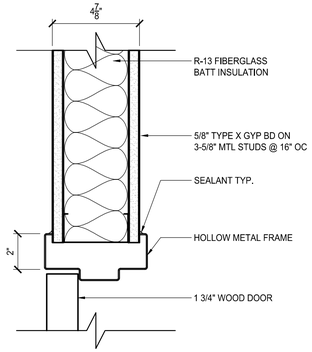

11 INTERIOR DOOR JAMB
SCALE: 3" = 1'-0"

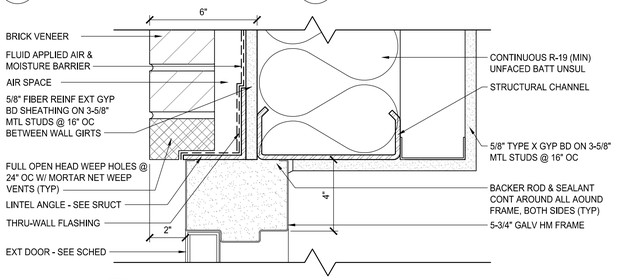

12 EXTERIOR HM DOOR HEAD
SCALE: 3" = 1'-0"

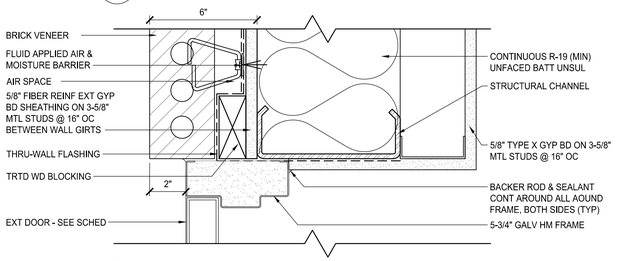

13 EXTERIOR HM DOOR HEAD
SCALE: 3" = 1'-0"

LPK

LPK ARCHITECTS, P.A.
2208 18TH ST, SUITE D
GULFPORT, MISSISSIPPI 39501
P.O. BOX 7117
GULFPORT, MISSISSIPPI 39506
P: 228.382.3122
F: 601.693.8640

These documents are the sole property of LPK Architects P.A. and are not to reused. Any alterations, revisions or reuse of these documents without the written consent of LPK Architects will result in all sureties and responsibilities for the entire project becoming null and void.
copyright LPK Architects, P.A.

www.GSEeng.com
GSE
CONSULTING ENGINEERS
Gulfport Mobile Nashville
1816 Pass Rd. Gulfport, MS 39501
(T)228-864-5050 (F)228-864-7744

PROFESSIONAL SEAL:

REVISION	DATE	DRAWN	APPROVED

UNITED STATES AIR FORCE — AIR EDUCATION AND TRAINING COMMAND

KEESLER AIR FORCE BASE
BILOXI — MISSISSIPPI
OFFICE OF CIVIL ENGINEERS

36 AES WAREHOUSE/OFFICE

OPENING SCHEDULE, FRAME TYPES & DOOR TYPES

SUBMITTED: (Chief of Contracts Design)		RECOMMENDED: (Chief of Engineering)	FACILITY NUMBER:
D. KINMAN		A. MARASCA	XX.X
DESIGNED: JKO	CHECKED: JKO	SCALE: VARIES	DRAWING NUMBER: A-601
DRAWN: JKO	DATE: 10-10-17	PROJECT NUMBER: MAHG 17-9002	SHEET X OF X

PLUMBING GENERAL NOTES:

SCOPE: THE SCOPE OF THE WORK IS GENERALLY INDICATED BY THE DRAWINGS AND SUMMARIZED BY THIS SCOPE OF WORK. DRAWINGS ARE DIAGRAMMATIC AND ARE NOT INTENDED TO INDICATE ALL DETAILS OF THE INSTALLATION OF PLUMBING WORK. IT WILL BE THE RESPONSIBILITY OF THE CONTRACTOR TO DETERMINE THE ACTUAL CONDITIONS AND REQUIREMENTS FOR THE INSTALLATION OF THE WORK. IF ANY INFORMATION PROVIDED ON THE DESIGN DOCUMENTS CONFLICTS WITH THE PROVIDED SPECIFICATIONS, THE SPECIFICATION REQUIREMENTS TAKE PRECEDENCE.

CODES & STANDARDS: BIDDING CONTRACTORS MUST VISIT THE SITE, REVIEW ALL CONSTRUCTION DOCUMENTS, AND OBTAIN WRITTEN COPIES OF ALL REFERENCED CODES AND ORDINANCES PRIOR TO SUBMITTING BIDS. NO ALLOWANCE WILL BE MADE FOR ADVERSE CONDITIONS WHICH WERE ASCERTAINABLE PRIOR TO BID TIME.

PLUMBING CODE COMPLIANCE: COMPLY WITH THE REQUIREMENTS OF THE 2012 INTERNATIONAL PLUMBING CODE AND ALL LOCAL ORDINANCES IN THE PERFORMANCE OF PLUMBING WORK REQUIRED FOR THIS PROJECT.

COORDINATION: COORDINATE THE PLUMBING WORK WITH THE WORK OF THE GENERAL CONTRACTOR AND OTHER SUB-CONTRACTORS. OBTAIN INFORMATION REGARDING THE ROUGH-IN AND FINAL CONNECTION REQUIREMENTS FOR EQUIPMENT TO BE PROVIDED BY THE OWNER OR OTHER CONTRACTORS PRIOR TO COMMENCING WORK.

CUTTING & PATCHING: PROVIDE LABOR, EQUIPMENT AND SPECIAL SERVICES NECESSARY TO CREATE OPENING NECESSARY FOR THE PASSAGE OF PIPING AND OTHER PLUMBING WORK. APPLY A ROUGH PATCH TO CLOSE OFF UNUSED PORTIONS OF OPENINGS USING MATERIALS THAT ARE SUBSTANTIALLY SIMILAR TO THAT OF THE ADJACENT STRUCTURE. FINAL PATCH AND FINISHES WILL BE APPLIED BY THE GENERAL CONTRACTOR.

MATERIALS, EQUIPMENT, AND SUBMITTALS: PROVIDE MATERIALS AND EQUIPMENT OF THE TYPE SIZE, CAPACITY, AND QUANTITY INDICATED BY THESE DOCUMENTS. WHERE MATERIAL SPECIFICATIONS ARE NOT INDICATED, PROVIDE MATERIALS THAT COMPLY WITH THE HIGHEST QUALITY INDUSTRY STANDARD. IF NO SUCH STANDARD EXISTS, CONTACT THE ARCHITECT/ENGINEER TO ASCERTAIN THE APPROPRIATE SPECIFICATION.

SUBSTITUTIONS: THE MANUFACTURER AND MODEL OF EQUIPMENT ARE INDICATED ONLY TO ESTABLISH A BASIS OF DESIGN. SUBMITTALS FOR EQUIPMENT OF OTHER MANUFACTURERS WILL BE CONSIDERED IF SPATIAL AND PERFORMANCE REQUIREMENTS ARE MET. BIDDERS MAY REQUEST "PRIOR REVIEW" FROM THE ENGINEER UP TO 3 DAYS PRIOR TO THE BID DATE TO ENSURE THE ACCEPTABILITY OF PROPOSED SUBSTITUTIONS.

WATER DISTRIBUTION PIPING: PROVIDE DOMESTIC COLD WATER, HOT WATER AND OTHER INDICATED WATER DISTRIBUTION PIPING SYSTEMS OF TYPE, SIZE, QUANTITY, AND CAPACITY INDICATED ON THE DRAWINGS, OF MATERIALS INDICATED IN THE PLUMBING MATERIALS TABLE. PROVIDE HANGERS, ANCHORS, CLAMPS, SUPPORTS, MIXING VALVES, AND OTHER ACCESSORIES REQUIRED FOR A COMPLETE SYSTEM. ENSURE WATER SUPPLY PRESSURE IS BETWEEN 60-80 PSI. IF WATER SUPPLY IS GREATER THAN 80 PSI PROVIDE A PRESSURE REDUCING VALVE SET AT 80 PSI.

DRAINAGE PIPING: PROVIDE DRAIN, WASTE, VENT AND OTHER INDICATED DRAINAGE PIPING SYSTEMS OF TYPE, SIZE, QUANTITY, AND CAPACITY INDICATED ON THE DRAWINGS, OF MATERIALS INDICATED IN THE PLUMBING MATERIALS TABLE. PROVIDE HANGERS, ANCHORS, CLAMPS, SUPPORTS, AND ACCESSORIES REQUIRED FOR A COMPLETE SYSTEM.

UTILITY TAPS: THE PLUMBING CONTRACTOR SHALL COORDINATE SEWER AND WATER TAPS WITH THE SITE UTILITY SERVICES. THE PLUMBING CONTRACTOR IS RESPONSIBLE FOR ALL APPLICABLE FEES.

PIPING INSULATION: PROVIDE 1" THICK FIBERGLASS PIPE INSULATION WITH ALL-SERVICE JACKET (ASTM C-547, C-921, TYPE I or II AS APPROPRIATE FOR TEMPERATURE) ON ALL COLD WATER, HOT WATER, HOT RETURN AND COLD DRAINAGE PIPING AS WELL AS ROOF DRAIN LEADERS TO 5'-0" FROM ROOF DRAIN. PROVIDE PRESSURE SENSITIVE TAPE, MASTIC, OR OTHER MATERIALS AS MAY BE REQUIRED TO MAINTAIN A CONTINUOUS VAPOR BARRIER THROUGHOUT THE SYSTEM. PROVIDE PRE-MOLDED PVC COVERS AT ALL FITTINGS. JACKETS AND VAPOR BARRIER MATERIALS MUST MEET LOCAL ORDINANCE REQUIREMENTS FOR FLAME SPREAD AND SMOKE DEVELOPED RATINGS. (SEE FLOOR PLANS FOR INSULATION REQUIREMENTS AT SPECIAL SYSTEMS.)

GAS PIPING: PROVIDE GAS PIPING SYSTEMS IN ACCORDANCE WITH NFPA STD. 54, USING HDPE FUSION-WELDED PIPING, FACTORY APPLIED YELLOW IN COLOR. PROVIDE "DURATHANE" ASTM D-2513 THERMOPLASTIC GAS PRESSURE PIPE FOR UNDERGROUND DISTRIBUTION. PROVIDE APPROPRIATE SUPPORTS AND ANCHORS, SQUARE HEAD GAS COCKS, AND PRESSURE REGULATORS WHERE INDICATED OR NECESSARY. EXTEND THE VENT FROM ALL PRESSURE REGULATORS TO OUTSIDE THE BUILDING, INDIVIDUALLY AND AT THE FULL SIZE OF THE REGULATOR VENT CONNECTION SIZE.

INSTRUMENTATION: PROVIDE THERMOWELLS AND THERMOMETERS AT EACH WATER HEATER.

IDENTIFICATION: PROVIDE MECHANICAL SYSTEMS IDENTIFICATION TO INDICATE THE TAG, TYPE, FLOW, TEMPERATURE RANGE, CAPACITY, ETC. OF EACH ITEM OF EQUIPMENT AND ALL CONVEYANCES (PIPING SYSTEMS). PROVIDE ENGRAVED PLASTIC LAMINATE PLATES FOR EQUIPMENT, "SNAP-ON" PIPE MARKERS FOR PIPING, AND ADHESIVE BACKED PLASTICIZED MARKERS FOR DUCTWORK. PROVIDE ENGRAVED PLASTIC LAMINATE VALVE TAGS AT EACH VALVE AND A VALVE TAG SCHEDULE FRAMED UNDER GLASS.

CONTRACT CLOSEOUT: PROVIDE EVIDENCE THAT ALL CONTRACTUAL OBLIGATIONS HAVE BEEN MET, INCLUDING, BUT NOT NECESSARILY LIMITED TO, PROVIDING "AS-BUILT" DRAWINGS, SYSTEM COMMISSIONING REPORTS, OPERATING AND MAINTENANCE MANUALS, TRAINING OF PERSONNEL, FULLY EXECUTED PUNCHLIST, WARRANTIES, EXTENDED WARRANTIES, AND OTHER DOCUMENTS THAT MAY BE PERTINENT TO THE PLUMBING PORTION OF THE PROJECT.

WARRANTY: THE CONTRACTOR SHALL WARRANT THE WORK PROVIDED AS PART OF THIS PROJECT TO BE FREE FROM DEFECTS IN MATERIALS AND WORKMANSHIP FOR A PERIOD OF ONE YEAR FROM THE COMMISSIONING ACCEPTANCE DATE.

NEW WORK — PLUMBING LEGEND

S	SANITARY		PIPE ELBOW UP
V	VENT		PIPE ELBOW DOWN
CW	DOMESTIC COLD WATER		GATE VALVE
HW	DOMESTIC HOT WATER		CHECK VALVE
			BALL VALVE
			CALIBRATED BALANCING VALVE
			GAS COCK
			DRAIN VALVE W/ 3/4" HPT
		FCO	FLOOR CLEANOUT
		ECO	EXTERIOR CLEANOUT
		WCO	WALL CLEANOUT
		VTW	VENT THROUGH WALL (INCREASER AS REQUIRED)
		FPWH	FREEZE PROOF WALL HYDRANT - 3/4"
			TAKE OVER POINT

WATER SUPPLY SIZING WORKSHEET

FIXTURE OR GROUP TYPE	OCCUPANCY	CONTROL	W.S.F.U.	QUANTITY	S/T DEMAND
WATER CLOSET	PUBLIC	FLUSH VALVE	10	2	20
KITCHEN/SERVICE SINK	PUBLIC	FLUSH VALVE	4	2	8
LAVATORY	PUBLIC	FAUCET	2	2	4
MOP SINK	PUBLIC	FAUCET	3	1	3
DRINKING FOUNTAIN	PUBLIC	FAUCET	0.25	1	0.25

SUM OF W.S.F.U.	35.25 W.S.F.U.
CONVERT TO G.P.M. (PREDOM. FLUSH VALVES)	45 GPM
DETERMINE BUILDING WATER SERVICE SIZE	1-1/2"

2012 INTERNATIONAL PLUMBING CODE PIPING MATERIALS

PIPING TYPE	COPPER PIPE ASTM B42, ASTM B302	COPPER TUBE ASTM B75, ASTM B88, ASTM B251, ASTM B306	GALV. STEEL ASTM A53	PEX-AL-PEX PIPE ASTM F1281, ASTM F2262, CAN/CSA B137.10M	PEX TUBE ASTM B76, ASTM F877, CSA B137.5	PVC PLASTIC ASTM D2665, ASTM D2949, ASTM F1488	ABS PLASTIC ASTM D2661, ASTM F628	CAST IRON ASTM A74, CISPI 301, ASTM A888	CONCRETE ASTM C14, ASTM C76	VITRIFIED CLAY ASTM C4, ASTM C700
WATER SERVICE	YES	YES	YES	YES	YES	NO	NO	NO	NO	NO
WATER DISTRIBUTION	YES	YES	YES	YES	YES	NO	NO	NO	NO	NO
ABOVE GROUND DRAINAGE & VENT	YES	YES	YES	NO	NO	YES	YES	YES	NO	NO
UNDERGROUND BLDG. DRAINAGE & VENT	NO	YES	NO	NO	NO	YES	YES	YES	NO	NO
BUILDING SEWER	NO	YES	NO	NO	NO	YES	YES	YES	YES	YES
BUILDING STORM SEWER	NO	YES	NO	NO	NO	YES	YES	YES	YES	YES
SUBSOIL DRAIN	NO	NO	NO	NO	NO	ASTM D2729	NO	YES	NO	YES

WATER HEATER SCHEDULE

TAG	TYPE	FUEL	MFR.	MODEL	STORAGE GALLONS	FUEL INPUT	GPM @ 80°F RISE	ELECTRICAL	ACCESSORIES / REMARKS
WH-1	INSTANTANEOUS	ELECTRIC	EEMAX	SP3208	-	3kW	-	208V	COMPRESSION FITTINGS, EXTENDED WARRANTY (IF AVAILABLE)
WH-2	INSTANTANEOUS	ELECTRIC	EEMAX	SP3208	-	3kW	-	208V	COMPRESSION FITTINGS, EXTENDED WARRANTY (IF AVAILABLE)
WH-3	INSTANTANEOUS	ELECTRIC	EEMAX	SP3208	-	3kW	-	208V	COMPRESSION FITTINGS, EXTENDED WARRANTY (IF AVAILABLE)
WH-4	INSTANTANEOUS	ELECTRIC	EEMAX	SP3208	-	3kW	-	208V	COMPRESSION FITTINGS, EXTENDED WARRANTY (IF AVAILABLE)
WH-5	INSTANTANEOUS	ELECTRIC	EEMAX	SP3208	-	3kW	-	208V	COMPRESSION FITTINGS, EXTENDED WARRANTY (IF AVAILABLE)

PLUMBING FIXTURE SCHEDULE

TAG	TYPE	MOUNTING	RIM HT.	MFR.	MODEL NO.	MATERIAL	FINISH	CW	HW	TRAP	DRAIN	VENT	TRIM / REMARKS
WC-1	FLUSH VALVE WATER CLOSET	FLOOR	16.5"	AMERICAN STANDARD	2234.015 "MADERA" ADA	VITREOUS CHINA	WHITE	1"	-	3"	4"	2"	OPEN FRONT SEAT, SLOAN #G-116-1.6YB FLUSH VALVE
L-1	ADA LAVATORY	WALL HUNG	34"	KOHLER	K-1728 "CHESAPEAKE"	VITREOUS CHINA	WHITE	3/8"	1/2"	1¼"	1½"	1¼"	K-7605-P SUPPLIES, K-7131-A OFFSET DRAIN, K-8998 P-TRAP, K-15243-4 FAUCET & GRID DRAIN, JOSAM #17100 FLOOR MOUNT CARRIER
FCO	FLOOR CLEANOUT	FLOOR	-	JOSAM	5600(*)	COATED CAST IRON	NIKALOY SATIN	-	-	-	-	-	* SIZE TO PIPE, 3" MIN.
WCO	WALL CLEANOUT	WALL	-	JOSAM	5870(*)	STAINLESS STEEL	POLISHED	-	-	-	-	-	* SIZE TO PIPE, 3" MIN.
FD-1	FLOOR DRAIN FINISHED AREAS	FLOOR	-	JOSAM	30003-A	COATED CAST IRON	NIKALOY SATIN	-	-	-	3"	-	6" TOP, TRAP GUARD SIZED FOR FLOOR DRAIN
SS-1	DEEP 2-BOWL SERVICE SINK	DROP-IN	SEE ARCH. DWGS.	ELKAY	DLR-3322-10	#302 STAINLESS STEEL	SATIN	1/2"	1/2"	1½"	1½"	1¼"	LK-2432 FAUCET, (2) LK-18 OPEN GRID STRAINERS
FPWH	FREEZEPROOF WALL HYDRANT	WALL	-	JOSAM	71000	BRONZE	NIKALOY SATIN	3/4"	-	-	-	-	INTEGRAL VACUUM BREAKER, SPARE CONTROL KEY
MS-1	MOP SINK	FLOOR	12"	FIAT PRODUCTS	TSBC6010	TERRAZZO	GREY	1/2"	1/2"	3"	3"	1½"	T&S BRASS #B-0695-ST FAUCET w/ VB @ 90° AFF, 830AA MOP SERVICE BASIN FITTING, 832AA HOSE & HOSE BRACKET, 833AA SILICONE SEALANT, MSG WALL GUARDS.
DF-1	ADA DRINKING FOUNTAIN - DBL	WALL	33.5"/ 39.5"	ELKAY	EDFP-217-C	#302 STAINLESS STEEL	SATIN	2@ 3/8"	-	2@ 1¼"	2@ 1½"	2@ 1¼"	DUAL HEIGHT UNIT
EEW	EMERGENCY EYEWASH	WALL	34"	GUARDIAN	G-1814	#304 STAINLESS STEEL	-	1/2"	1/2"	-	-	-	G3600LF MIXING VALVE
SS-2	SINGLE BOWL SERVICE SINK	FLOOR	-	ADVANCE TABCO	9-1-24-18RL	#304 STAINLESS STEEL	-	1/2"	1/2"	1½"	1½"	1¼"	T&S 5F-8WLX08 SWIVEL FAUCET, GRID DRAIN

LPK architects

LPK ARCHITECTS, P.A.
2208 18TH ST, SUITE D
GULFPORT, MISSISSIPPI 39501
P.O. BOX 7117
GULFPORT, MISSISSIPPI 39506
P: 228.382.3122
F: 601.693.8640

These documents are the sole property of LPK Architects P.A. and are not to reused. Any alterations, revisions or reuse of these documents without the written consent of LPK Architects will result in all sureties and responsibilities for the entire project becoming null and void.

copyright LPK Architects, P.A.

www.GSEeng.com
GSE
CONSULTING ENGINEERS
Gulfport Mobile Nashville
1816 Pass Rd. Gulfport, MS 39501
(T)228-864-5050 (F)228-864-7744

PROFESSIONAL SEAL:

JOHN T. WADE — REGISTERED PROFESSIONAL — ENGINEER — 14567 — STATE OF MISSISSIPPI

11/10/17

REVISION	DATE		DRAWN	APPROVED

UNITED STATES AIR FORCE — AIR EDUCATION AND TRAINING COMMAND

KEESLER AIR FORCE BASE
BILOXI — MISSISSIPPI
OFFICE OF CIVIL ENGINEERS

36 AES WAREHOUSE/OFFICE

PLUMBING NOTES, LEGENDS & SCHEDULES

SUBMITTED: (Chief of Contracts Design) D. KINMAN		RECOMMENDED: (Chief of Engineering) A. MARASCA	FACILITY NUMBER: XX.X
DESIGNED: JDT	CHECKED: CJD	SCALE: AS NOTED	DRAWING NUMBER: P-001
DRAWN: JDT	DATE: 10-04-17	PROJECT NUMBER: MAHG 17-9002	SHEET X OF _____

GENERAL NOTES:

1. KEEP ALL CUTTING AND PATCHING TO A MINIMUM.
2. IT IS RECOMMENDED THAT THE SUBCONTRACTOR ARRANGE A PRE-JOB CONFERENCE WITH THE CONSTRUCTION SUPERVISOR FOR REVIEW AND CLARIFICATION PRIOR TO STARTING ANY WORK.
3. PROVIDE ASSE 1070 COMPLAINT MIXING VALVE UNDER SINKS, SET AT 110°F, FOR WH-1, WH-2, AND WH-4.
4. ALL UTILITY PIPING OVERHEAD IN BUILDING IS THE BE LABELED IN ACCORDANCE WITH ASME 13.1.

KEYED NOTES:

1. INCOMING UTILITIES, SEE CIVIL FOR CONTINUATION.
2. WH-1 TO BE LOCATED UNDER SINK AS HIGH AS POSSIBLE.
3. WH-2 TO BE LOCATED UNDER SINK AS HIGH AS POSSIBLE.
4. WH-3 TO BE LOCATED ABOVE MOP SINK.
5. WH-4 TO BE LOCATED UNDER SINK AS HIGH AS POSSIBLE.
6. NATURAL GAS REGULATOR AND SMART METER: 240,000 BTU/HR OUTPUT AT 7-11"W.C. COORDINATE WITH CENTERPOINT ENERGY.
7. WH-5 TO BE LOCATED BELOW EMERGENCY EYE WASH. CONNECT TO 1/2" HOT WATER LINE, ROUTE HOT WATER LINE TO SS-2.
8. WATTS LF007, OR EQUAL, 1-1/2" DOUBLE CHECK BACKFLOW PREVENTER IN ACCESSIBLE LOCATION WITH ELECTRONIC SMART METER WITH DIGITAL READOUT. PROVIDE INDICATION OF LOCATION ON CEILING TILE.

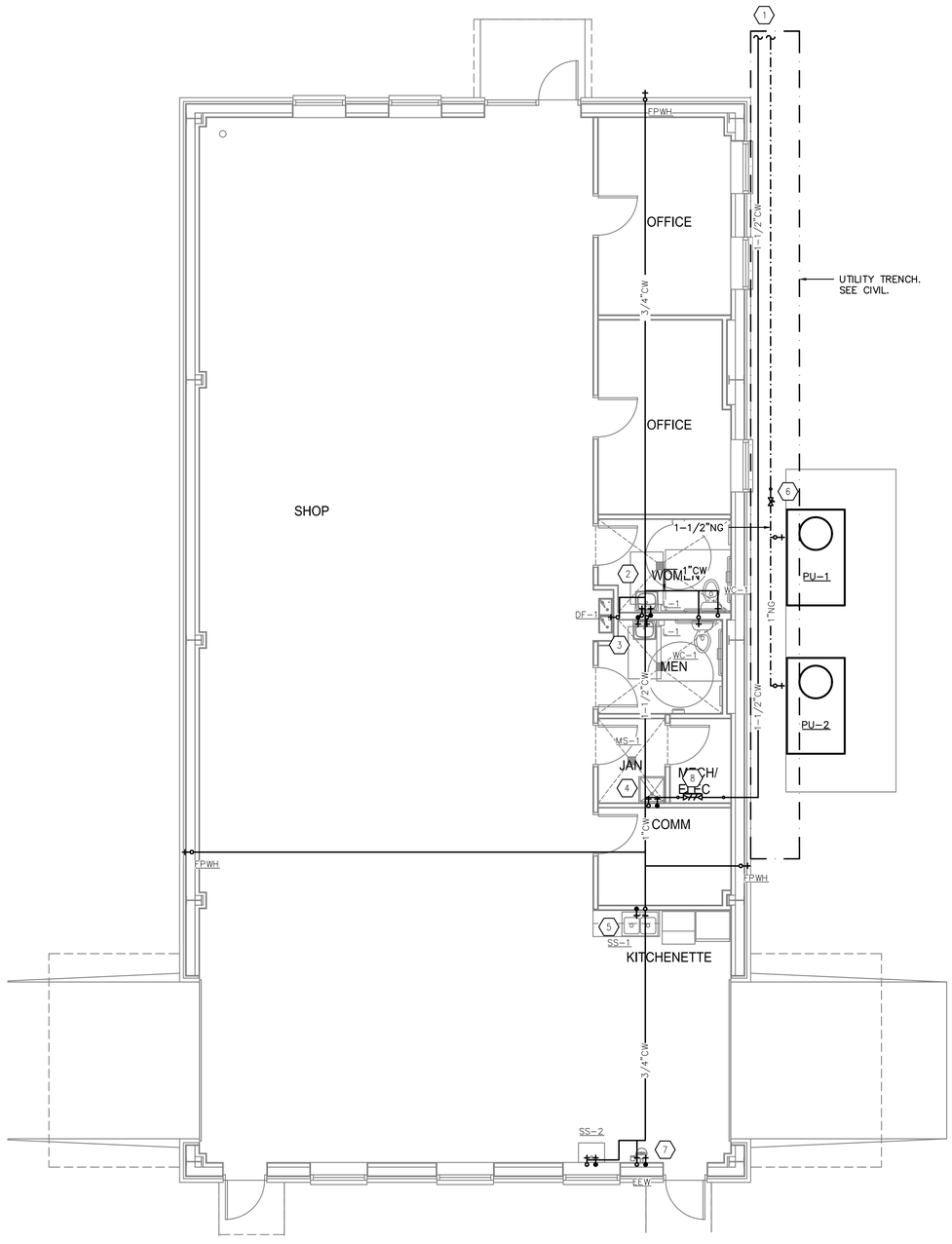

1 PLUMBING PLAN
SCALE: 3/16" = 1'-0"

EQUIPMENT	BTUH INPUT
PU-1	120,000
PU-2	120,000
TOTAL USAGE	240,000
APPROX. DISTANCE FROM REGULATOR TO FARTHEST TAKE OFF 75'	
GAS TYPE: NATURAL GAS, 7-11" W.C.	

NOTE:
ALL EXPOSED GAS PIPING SHALL BE PAINTED WITH A YELLOW EPOXY PAINT. ALSO, PROVIDE LABELS "GAS" AND "OPERATING PRESSURE".

LPK architects

LPK ARCHITECTS, P.A.
2208 18TH ST, SUITE D
GULFPORT, MISSISSIPPI 39501
P.O. BOX 7117
GULFPORT, MISSISSIPPI 39506
P: 228.382.3122
F: 601.693.8640

These documents are the sole property of LPK Architects P.A. and are not to reused. Any alterations, revisions or reuse of these documents without the written consent of LPK Architects will result in all sureties and responsibilities for the entire project becoming null and void.

copyright LPK Architects, P.A.

www.GSEeng.com
GSE CONSULTING ENGINEERS
Gulfport Mobile Nashville
1816 Pass Rd. Gulfport, MS 39501
(T)228-864-5050 (F)228-864-7744

PROFESSIONAL SEAL:

JOHN T. WADE REGISTERED PROFESSIONAL ENGINEER 14567 STATE OF MISSISSIPPI
11/10/17

REVISION	DATE	DRAWN	APPROVED

UNITED STATES AIR FORCE — AIR EDUCATION AND TRAINING COMMAND

KEESLER AIR FORCE BASE
BILOXI — MISSISSIPPI

OFFICE OF CIVIL ENGINEERS

36 AES WAREHOUSE/OFFICE

PLUMBING PLAN

SUBMITTED: (Chief of Contracts Design) D. KINMAN		RECOMMENDED: (Chief of Engineering) A. MARASCA	FACILITY NUMBER: XX.X
DESIGNED: JDT	CHECKED: CJD	SCALE: AS NOTED	DRAWING NUMBER: P-101
DRAWN: JDT	DATE: 10-04-17	PROJECT NUMBER: MAHG 17-9002	SHEET X OF

GENERAL NOTES:

1. KEEP ALL CUTTING AND PATCHING TO A MINIMUM.
2. IT IS RECOMMENDED THAT THE SUBCONTRACTOR ARRANGE A PRE-JOB CONFERENCE WITH THE CONSTRUCTION SUPERVISOR FOR REVIEW AND CLARIFICATION PRIOR TO STARTING ANY WORK.

KEYED NOTES:

(1) EXISTING 4" SANITARY, SEE CIVIL/SITE UTILITIES FOR CONTINUATION.

(2) HUB DRAINS FOR HVAC CONDENSATE DISPOSAL. COORDINATE WITH MECHANICAL. PROVIDE PROTECTIVE COVERING TO SHIELD FROM STORM WATER, HUB DRAIN TO EXTEND 4" ABOVE SLAB AND BE PAINTED SAFETY ORANGE.

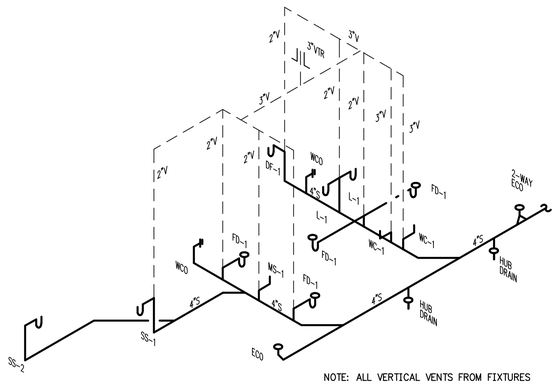

NOTE: ALL VERTICAL VENTS FROM FIXTURES TO BE 2" MINIMUM. WC-1 TO HAVE 3" VENT.

2 SANITARY RISER
NTS

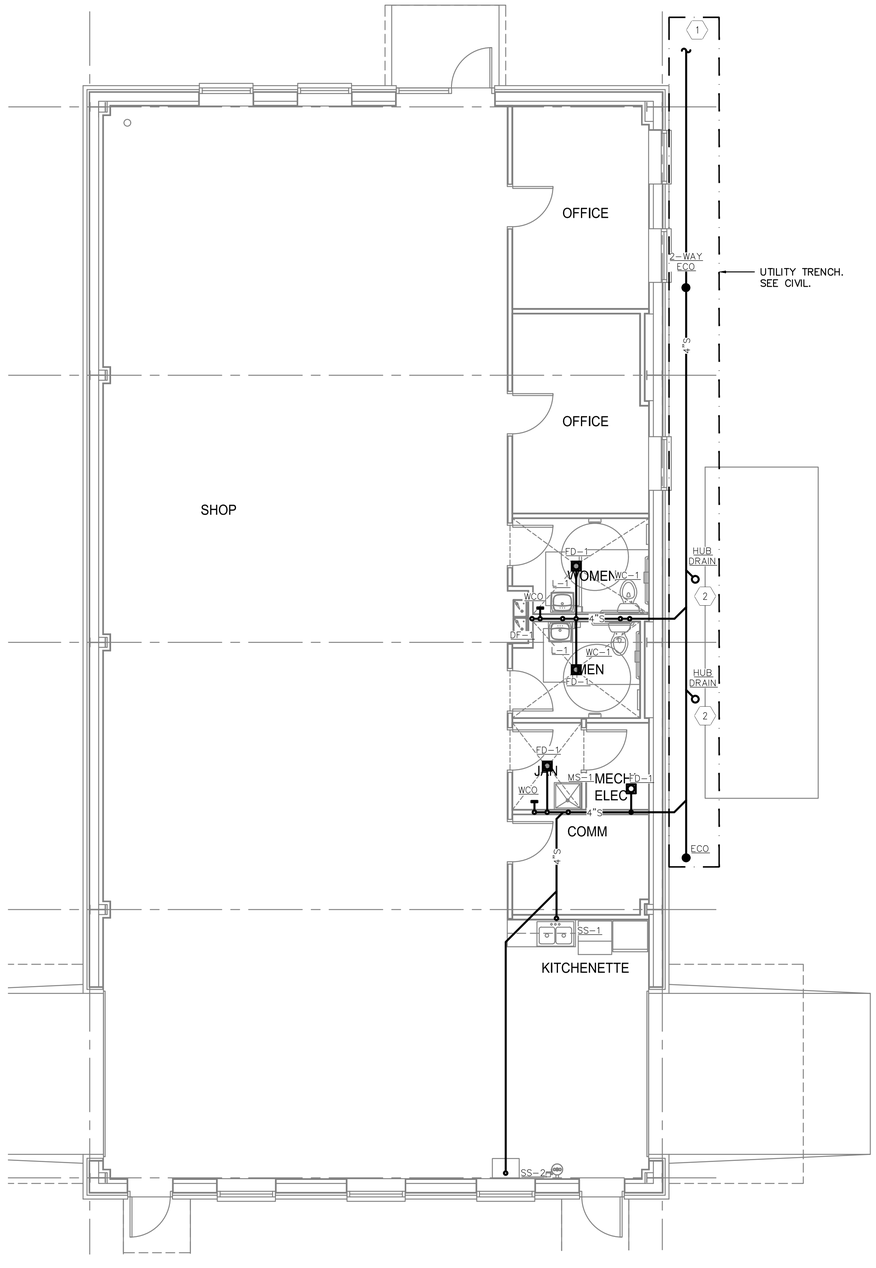

1 SANITARY PLAN
SCALE: 3/16" = 1'-0"

LPK architects

LPK ARCHITECTS, P.A.
2208 18TH ST, SUITE D
GULFPORT, MISSISSIPPI 39501
P.O. BOX 7117
GULFPORT, MISSISSIPPI 39506
P: 228.382.3122
F: 601.693.8640

These documents are the sole property of LPK Architects P.A. and are not to reused. Any alterations, revisions or reuse of these documents without the written consent of LPK Architects will result in all sureties and responsibilities for the entire project becoming null and void.

copyright LPK Architects, P.A.

www.GSEeng.com
GSE
CONSULTING ENGINEERS
Gulfport Mobile Nashville
1816 Pass Rd. Gulfport, MS 39501
(T)228-864-5050 (F)228-864-7744

PROFESSIONAL SEAL:

JOHN T. WADE
REGISTERED PROFESSIONAL ENGINEER
14567
STATE OF MISSISSIPPI
11/10/17

REVISION	DATE	DRAWN	APPROVED

UNITED STATES AIR FORCE — AIR EDUCATION AND TRAINING COMMAND

KEESLER AIR FORCE BASE
BILOXI — MISSISSIPPI

OFFICE OF CIVIL ENGINEERS

36 AES WAREHOUSE/OFFICE

SANITARY PLAN

SUBMITTED: (Chief of Contracts Design)		RECOMMENDED: (Chief of Engineering)	FACILITY NUMBER:
D. KINMAN		A. MARASCA	XX.X
DESIGNED: JDT	CHECKED: CJD	SCALE: AS NOTED	DRAWING NUMBER: P-102
DRAWN: JDT	DATE: 10-04-17	PROJECT NUMBER: MAHG 17-9002	SHEET X OF

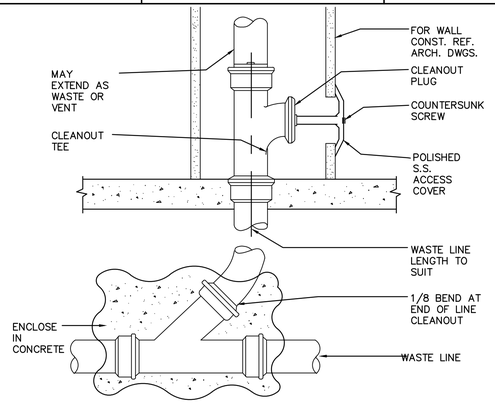

WALL CLEANOUT DETAIL 1
SCALE: NONE

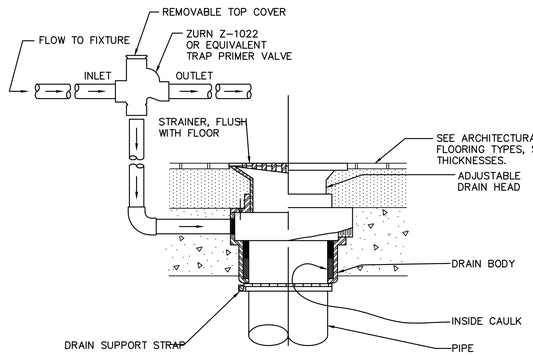

FLOOR DRAIN WITH TRAP PRIMER 2
SCALE: NONE

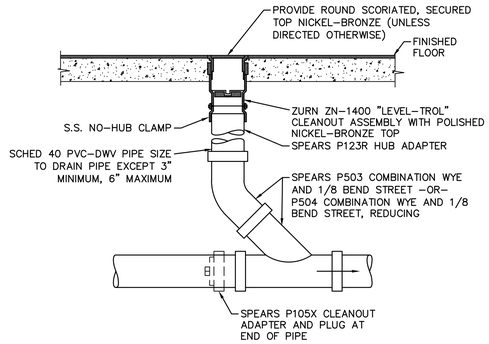

FLOOR CLEANOUT DETAIL 5
SCALE: NONE

LPK architects

LPK ARCHITECTS, P.A.
2206 18TH ST, SUITE D
GULFPORT, MISSISSIPPI 39501
P.O. BOX 7117
GULFPORT, MISSISSIPPI 39506
P: 228.382.3122
F: 601.693.8640
These documents are the sole property of LPK Architects P.A. and are not to reused. Any alterations, revisions or reuse of these documents without the written consent of LPK Architects will result in all sureties and responsibilities for the entire project becoming null and void.
copyright LPK Architects, P.A.

www.GSEeng.com
GSE
CONSULTING ENGINEERS
Gulfport Mobile Nashville
1816 Pass Rd. Gulfport, MS 39501
(T)228-864-5050 (F)228-864-7744

PROFESSIONAL SEAL:

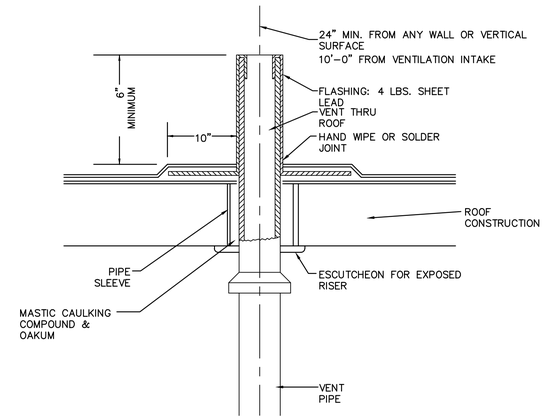

VENT THROUGH ROOF DETAIL 4
SCALE: NONE

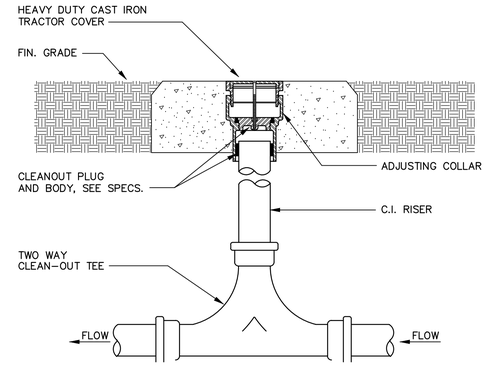

TWO-WAY CLEANOUT DETAIL 5
SCALE: NONE

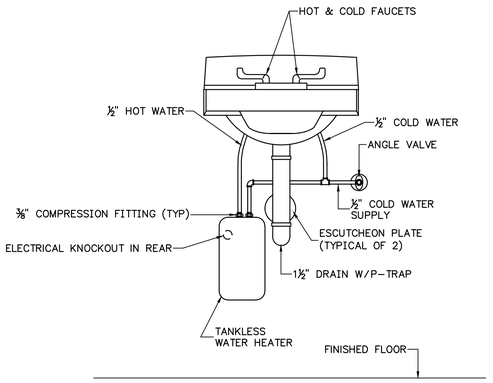

WATER HEATER DETAIL 5
SCALE: NONE

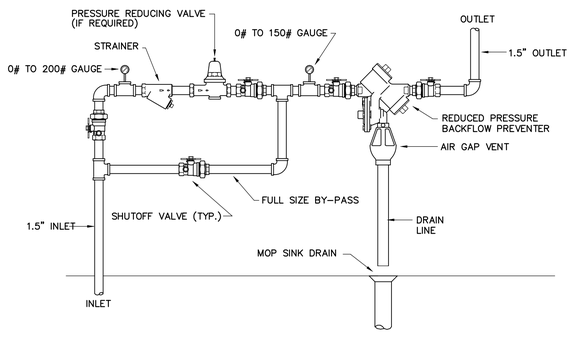

BACKFLOW PREVENTION DETAIL 7
SCALE: NONE

NOT USED 8
SCALE: NONE

REVISION	DATE	DRAWN	APPROVED

UNITED STATES AIR FORCE — AIR EDUCATION AND TRAINING COMMAND

KEESLER AIR FORCE BASE
BILOXI — MISSISSIPPI
OFFICE OF CIVIL ENGINEERS

36 AES WAREHOUSE/OFFICE

PLUMBING DETAILS

SUBMITTED: (Chief of Contracts Design)		RECOMMENDED: (Chief of Engineering)	FACILITY NUMBER:
D. KINMAN		A. MARASCA	XX.X
DESIGNED: JDT	CHECKED: CJD	SCALE: AS NOTED	DRAWING NUMBER: P-501
DRAWN: JDT	DATE: 10-04-17	PROJECT NUMBER: MAHG 17-9002	SHEET X OF

H.V.A.C. SCOPE OF WORK:

SCOPE: THE SCOPE OF THE WORK IS GENERALLY INDICATED BY THE DRAWINGS AND SUMMARIZED BY THIS SCOPE OF WORK. DRAWINGS ARE DIAGRAMMATIC AND ARE NOT INTENDED TO INDICATE ALL DETAILS OF THE INSTALLATION OF MECHANICAL WORK. IT WILL BE THE RESPONSIBILITY OF THE CONTRACTOR TO DETERMINE THE ACTUAL CONDITIONS AND REQUIREMENTS FOR THE INSTALLATION OF THE WORK. WHERE INFORMATION REQUIRED TO PROVIDE A COMPLETE WORK IS OMITTED OR UNCLEAR, THE CONTRACTOR IS RESPONSIBLE FOR REQUESTING A CLARIFICATION FROM THE ENGINEER PRIOR TO SUBMISSION OF BIDS. BIDDING CONTRACTORS MUST VISIT THE SITE, REVIEW ALL CONSTRUCTION DOCUMENTS, AND OBTAIN WRITTEN COPIES OF ALL REFERENCED CODES AND ORDINANCES PRIOR TO SUBMITTING BIDS. NO ALLOWANCE WILL BE MADE FOR ADVERSE CONDITIONS WHICH WERE ASCERTAINABLE PRIOR TO BID TIME. IF ANY INFORMATION PROVIDED ON THE DESIGN DOCUMENTS CONFLICTS WITH THE PROVIDED SPECIFICATIONS, THE SPECIFICATION REQUIREMENTS TAKE PRECEDENCE.

CODES & STANDARDS: BIDDING CONTRACTORS MUST VISIT THE SITE, REVIEW ALL CONSTRUCTION DOCUMENTS, AND OBTAIN WRITTEN COPIES OF ALL REFERENCED CODES AND ORDINANCES PRIOR TO SUBMITTING BIDS. NO ALLOWANCE WILL BE MADE FOR ADVERSE CONDITIONS WHICH WERE ASCERTAINABLE PRIOR TO BID TIME.

MECHANICAL CODE COMPLIANCE: COMPLY WITH THE REQUIREMENTS OF THE 2012 INTERNATIONAL MECHANICAL CODE AND ALL LOCAL AMENDMENTS IN THE PERFORMANCE OF MECHANICAL WORK REQUIRED FOR THIS PROJECT. ENSURE THAT ALL OUTDOOR AIR INTAKES ARE 10'-0" OR MORE FROM EXHAUSTS, FLUES, PLUMBING VENTS AND OTHER SOURCES OF CONTAMINATION. ALL COMBUSTIBLE MATERIALS INCORPORATED INTO THE PROJECT SHALL HAVE MAXIMUM RATINGS OF 25 FLAME SPREAD AND 50 SMOKE DEVELOPED.

COORDINATION: COORDINATE THE MECHANICAL WORK WITH THE WORK OF THE GENERAL CONTRACTOR AND OTHER SUB-CONTRACTORS. OBTAIN INFORMATION REGARDING THE ROUGH-IN AND FINAL CONNECTION REQUIREMENTS FOR EQUIPMENT TO BE PROVIDED BY THE OWNER OR OTHER CONTRACTORS PRIOR TO COMMENCING WORK. OBTAIN FINAL LOCATIONS OF CEILING GRIDS, LIGHTING FIXTURES, SPRINKLERS, PIPING AND OTHER COMPONENTS THAT WILL AFFECT THE LAYOUT OF HVAC DUCTWORK AND TERMINAL DEVICES PRIOR TO COMMENCING INSTALLATION WORK.

CUTTING & PATCHING: CONTRACTOR SHALL PROVIDE SLEEVES, CURBS, AND PORTALS AS NECESSARY TO MINIMIZE THE NEED TO CUT STRUCTURAL COMPONENTS. PROVIDE LABOR, EQUIPMENT AND SPECIAL SERVICES NECESSARY TO CREATE OPENING NECESSARY FOR THE PASSAGE OF PIPING, DUCTWORK, AND OTHER MECHANICAL WORK. APPLY A ROUGH PATCH TO CLOSE OFF UNUSED PORTIONS OF OPENINGS USING MATERIALS THAT ARE SUBSTANTIALLY SIMILAR TO THAT OF THE ADJACENT STRUCTURE. NO STRUCTURAL COMPONENTS MAY BE CUT WITHOUT 24-HOUR PRIOR WRITTEN APPROVAL OF ARCHITECT/ENGINEER.

MATERIALS, EQUIPMENT, AND SUBMITTALS: PROVIDE MATERIALS AND EQUIPMENT OF THE TYPE SIZE, CAPACITY, AND QUANTITY INDICATED BY THESE DOCUMENTS. WHERE MATERIAL SPECIFICATIONS ARE NOT INDICATED, PROVIDE MATERIALS THAT COMPLY WITH THE HIGHEST QUALITY INDUSTRY STANDARD. IF NO SUCH STANDARD EXISTS, CONTACT THE ARCHITECT/ENGINEER TO ASCERTAIN THE APPROPRIATE SPECIFICATION.

SUBSTITUTIONS: THE OWNER WILL CONSIDER SUBSTITUTIONS OF THE "DESIGN BASIS" SPECIFICATION WHERE GREATER VALUE CAN BE ACHIEVED. OBTAIN THE WRITTEN PERMISSION OF THE ARCHITECT/ENGINEER PRIOR TO MAKING ANY SUBSTITUTIONS AND TAKE RESPONSIBILITY FOR THE DIMENSIONAL AND PERFORMANCE CONSTRAINTS IMPOSED BY THE SUBSTITUTED EQUIPMENT/MATERIAL.

H.V.A.C. EQUIPMENT: ALL EQUIPMENT SHALL BE INSTALLED IN ACCORDANCE WITH MANUFACTURER'S RECOMMENDATIONS. PROVIDE AN EFFECTIVE MEANS OF ISOLATING VIBRATIONS GENERATED BY EQUIPMENT FROM DUCTWORK, PIPING, CONDUITS, AND THE BUILDING STRUCTURE.

DUCTWORK: ALL DUCTWORK SHALL BE FABRICATED OF PRIME A-60 COATED GALVANIZED STEEL OF LOCK FORMING GRADE CONFORMING TO ASTM STANDARDS A-525 AND A-527, EXCEPT AS OTHERWISE INDICATED ON PROJECT CONTRACT DOCUMENTS. FABRICATE AND INSTALL DUCTWORK, FITTINGS, CONNECTORS, HANGERS, AND DUCTWORK ACCESSORIES IN ACCORDANCE WITH THE RECOMMENDATIONS OF S.M.A.C.N.A. 'HVAC DUCT CONSTRUCTION STANDARDS, METAL AND FLEXIBLE', LATEST EDITION, USING THE 2" W.C. POSITIVE PRESSURE CHART, EXCEPT NO DUCTWORK SHALL BE LIGHTER THAN 24 GAUGE. SEAL ALL DUCTWORK SUBSTANTIALLY AIRTIGHT TO COMPLY WITH S.M.A.C.N.A. SEAL CLASS "A". CLEAR AIRWAY DUCT DIMENSIONS ARE INDICATED ON THE DRAWINGS. ALL DUCTS THAT CONVEY GREASE-LADEN OR VAPOR-BEARING (>80% RH) AIR SHALL BE SEALED WATER-TIGHT AND PITCHED TO THE SOURCE AT NO LESS THAN 2% SLOPE. ALL FLEXIBLE AIR CONNECTORS SHALL BE TESTED IN ACCORDANCE WITH UL 181. SUCH CONNECTORS SHALL BE LISTED AND LABELED AS CLASS 0 OR CLASS 1 FLEXIBLE AIR CONNECTORS AND SHALL BE INSTALLED IN ACCORDANCE WITH SECTION 304.1 IN THE INTERNATIONAL MECHANICAL CODE. ALL FLEXIBLE AIR CONNECTORS SHALL BE LIMITED IN LENGTH TO 5 FEET AND SHALL NOT PASS THROUGH ANY WALL, FLOOR OR CEILING.

DUCTWORK INSULATION: PROVIDE 2" THICK, MIN. R-6.0 FIBERGLASS BLANKET INSULATION WITH FSK VAPOR BARRIER ON ALL SUPPLY, RETURN, AND OUTDOOR AIR INTAKE DUCTWORK. PROVIDE PRESSURE SENSITIVE TAPE, MASTIC, OR OTHER MATERIALS AS MAY BE REQUIRED TO MAINTAIN A CONTINUOUS VAPOUR BARRIER THROUGHOUT THE SYSTEM. JACKETS AND VAPOR BARRIER MATERIALS MUST MEET LOCAL ORDINANCE REQUIREMENTS FOR FLAME SPREAD AND SMOKE DEVELOPED RATINGS. FOR DUCTWORK EXPOSED TO THE WEATHER, PROVIDE 2" THICK RIGID FIBERGLASS INSULATION WITH 0.063" ALUMINUM JACKET, SEALED WEATHERTIGHT. NO FIBERGLASS LINERS SHALL BE PERMITTED.

REFRIGERANT PIPING: PROVIDE TYPE L-ACR HARD TEMPER COPPER TUBING AND WROUGHT COPPER REFRIGERATION TYPE FITTINGS FOR ALL REFRIGERANT PIPING. BRAZE ALL JOINTS TO WITHSTAND MINIMUM 500 PSIG PRESSURE. PURGE REFRIGERANT PIPES WITH DRY NITROGEN AFTER INSTALLATION AND EVACUATE SYSTEM TO 250 MICRONS FOR A PERIOD OF 24 HOURS PRIOR TO CHARGING SYSTEMS. CHARGE SYSTEMS WITH REFRIGERANT INDICATED IN EQUIPMENT SCHEDULES AS REQUIRED TO OBTAIN PROPER OPERATING PRESSURES DURING NORMAL OPERATION. PROVIDE ALL DX SYSTEM'S REFRIGERANT PIPING WITH PRESSURE GAUGES. PROVIDE A LIQUID LINE FILTER-DRIER AND MOISTURE INDICATING SIGHT GLASS FOR EACH SYSTEM, AS WELL AS OTHER REFRIGERATION SPECIALTIES INDICATED ON DRAWINGS. TEST SYSTEMS AFTER STARTUP FOR LEAKS, AND REPAIR ALL LEAKS FOUND AND CLEAN & RECHARGE SYSTEMS ANEW. PROVIDE UNICELLULAR RUBBER INSULATION ON SUCTION PIPING AND COLD REFRIGERATION EQUIPMENT, WITH A MINIMUM THICKNESS OF 3/8" INDOORS AND 3/4" OUTDOORS. PROVIDE A TRAPPED CONDENSATE DRAIN FOR EACH EVAPORATOR COIL, SIZED TO THE CONNECTION PROVIDED AND RUN OUT TO AN APPROPRIATE SANITARY DRAIN CONNECTION, OR SUITABLE FRENCH DRAIN, WITH A MINIMUM 2" AIR GAP.

PIPING INSULATION: PROVIDE 1½" THICK FIBERGLASS PIPE INSULATION WITH ALL-SERVICE JACKET (ASTM C-547, C-921, TYPE I or II AS APPROPRIATE FOR TEMPERATURE) ON ALL PIPING WHERE FLUIDS TEMPERATURE ARE MORE THAN 10° BELOW AMBIENT OR MORE THAN 25° ABOVE AMBIENT TEMPERATURE.. PROVIDE PRESSURE SENSITIVE TAPE, MASTIC, OR OTHER MATERIALS AS MAY BE REQUIRED TO MAINTAIN A CONTINUOUS VAPOR BARRIER THROUGHOUT THE SYSTEM. PROVIDE PRE-MOLDED PVC COVERS AT ALL FITTINGS. JACKETS AND VAPOR BARRIER MATERIALS MUST MEET LOCAL ORDINANCE REQUIREMENTS FOR FLAME SPREAD AND SMOKE DEVELOPED RATINGS. (SEE FLOOR PLANS FOR INSULATION REQUIREMENTS AT SPECIAL SYSTEMS.)

INSTRUMENTATION: PROVIDE THERMOMETERS, THERMOWELLS, PRESSURE GAUGES, FLOW INDICATORS, CALIBRATED BALANCING VALVES, P&T PLUGS, AND OTHER INSTRUMENTATION INDICATED ON THE DRAWINGS. IN THE ABSENCE OF SUCH INDICATION, PROVIDE, AT MINIMUM, THERMOWELLS AND THERMOMETERS AT EACH ITEM OF HEAT TRANSFER EQUIPMENT (BOILER, CHILLER, COOLING TOWER, COIL, HEAT EXCHANGER, ETC.) AND PRESSURE GAUGES WITH GAUGE COCKS AND SNUBBERS, AT ITEM OF HEAT TRANSFER EQUIPMENT AND EACH PRIME MOVER (PUMP, FAN, ETC.).

IDENTIFICATION: PROVIDE MECHANICAL SYSTEMS IDENTIFICATION TO INDICATE THE TAG, TYPE, FLOW, TEMPERATURE RANGE, CAPACITY, ETC. OF EACH ITEM OF EQUIPMENT AND ALL CONVEYANCES (DUCTWORK AND PIPING SYSTEMS). PROVIDE ENGRAVED PLASTIC LAMINATE PLATES FOR EQUIPMENT, "SNAP-ON" PIPE MARKERS FOR PIPING, AND ADHESIVE BACKED PLASTICIZED MARKERS FOR DUCTWORK. PROVIDE ENGRAVED PLASTIC LAMINATE VALVE TAGS AT EACH VALVE AND A VALVE TAG SCHEDULE FRAMED UNDER GLASS.

CONTROLS: PROVIDE ALL CONTROL DEVICES, CONDUIT, CONDUCTORS, AND ACCESSORIES REQUIRED TO FURNISH AND INSTALL A COMPLETE AND OPERATING SYSTEM OF TEMPERATURE CONTROLS TO ACCOMPLISH THE INDICATED SEQUENCE OF OPERATION.

SAFETY DEVICES: ALL AIR MOVING EQUIPMENT WITH RATED AIRFLOW CAPACITY OF 2000 CFM OR GREATER SHALL BE EQUIPPED WITH A RETURN-AIR DUCT-MOUNTED SMOKE DETECTOR. WHEN THE DETECTOR SENSES AIRBORNE SMOKE IN THE DUCTS, THE DEVICE SHALL SHUT DOWN THE ASSOCIATED FAN. THE DEVICE SHALL INCLUDE AN AUXILIARY DRY CONTACT FOR FIRE ALARM SYSTEM INTERLOCK, WHERE PROVIDED. PROVIDE A MAGNETICALLY ACTUATED SMOKE DETECTOR TEST STATION FOR EACH SMOKE DETECTOR, LOCATED ON A WALL, 54" A.F.F., AS DIRECTED BY THE FIRE AUTHORITY HAVING JURISDICTION.

AIR TEST & BALANCE: PROVIDE THE SERVICES OF A TECHNICIAN, QUALIFIED AND EXPERIENCED IN THE FIELD OF H.V.A.C. SYSTEMS COMMISSIONING TO INITIATE, QUANTIFY, ADJUST AND CALIBRATE THE OPERATION OF THE INSTALLED SYSTEMS. PERFORM COMMISSIONING WORK IN ACCORDANCE WITH THE STANDARDIZED METHODOLOGY SET FORTH IN ASHRAE GUIDELINE 1-1996 "THE HVAC COMMISSIONING PROCESS". PRIOR TO COMMISSIONING, REPLACE ALL AIR FILTER MEDIA. USE MINIMUM MERV-8 FILTERS. SUBMIT COMMISSIONING REPORTS WITHIN 3 DAYS OF SUBSTANTIAL COMPLETION. THE PROJECT SHALL BE DEEMED SUBSTANTIALLY COMPLETE WHEN THE WORK OR A DESIGNATED PORTION THEREOF IS SUFFICIENTLY COMPLETE, IN ACCORDANCE WITH THE CONTRACT DOCUMENTS, SO THAT THE OWNER MAY OCCUPY THE WORK OR DESIGNATED PORTION THEREOF FOR THE USE FOR WHICH IT IS INTENDED.

CONTRACT CLOSEOUT: PROVIDE EVIDENCE THAT ALL CONTRACTUAL OBLIGATIONS HAVE BEEN MET, INCLUDING, BUT NOT NECESSARILY LIMITED TO, PROVIDING "AS-BUILT" DRAWINGS, SYSTEM COMMISSIONING REPORTS, OPERATING AND MAINTENANCE MANUALS, TRAINING OF PERSONNEL, FULLY EXECUTED PUNCHLIST, WARRANTIES, EXTENDED WARRANTIES, AND OTHER DOCUMENTS THAT MAY BE PERTINENT TO THE MECHANICAL PORTION OF THE PROJECT.

WARRANTY: THE CONTRACTOR SHALL WARRANT THE WORK PROVIDED AS PART OF THIS PROJECT TO BE FREE FROM DEFECTS IN MATERIALS AND WORKMANSHIP FOR A PERIOD OF ONE YEAR FROM THE COMMISSIONING ACCEPTANCE DATE. PROVIDE EVIDENCE OF ALL EXTENDED WARRANTIES AVAILABLE FROM EQUIPMENT MANUFACTURERS.

TEMPERATURE CONTROL - SEQUENCE OF OPERATION:

PACKAGED AIR CONDITIONING SYSTEMS:

1. THE TEMPERATURE CONTROL SYSTEM FOR PACKAGED SYSTEMS SHALL BE MICROPROCESSOR-BASED WITH REMOTELY MOUNTED ZONE TEMPERATURE SENSING DEVICES. EACH H.V.A.C. SYSTEM SHALL BE CONTROLLED INDEPENDENTLY OF THE OTHERS. IF THE CONTROL SYSTEM DOES NOT HAVE TIME CLOCK CAPABILITY, PROVIDE A PROGRAMMABLE SEVEN-DAY TIME CLOCK TO PROVIDE "OCCUPIED" AND "UNOCCUPIED" STATUS TO THE CONTROL SYSTEM.

2. ALL DEVICES SHALL BE MOUNTED ON NEMA RATED ELECTRICAL BOXES AND ALL CONDUCTORS SHALL BE CONTAINED WITHIN E.M.T. CONDUIT. DO NOT RUN LOW VOLTAGE CONTROL WIRING IN CONDUITS WITH LINE VOLTAGE POWER WIRING.

3. THE ZONE TEMPERATURE SENSING DEVICES SHALL BE MOUNTED WITHIN THE ASSOCIATED CONDITIONED SPACE, AT 54" ABOVE THE FINISHED FLOOR UNLESS NOTED, AND SHALL INCLUDE AN INTEGRAL TEMPERATURE SENSOR AND MANUALLY OR AUTOMATICALLY OPERATED "FAN" AND "SYSTEM" SWITCHES. WHERE INDICATED ON PLANS, PROVIDE MULTIPLE REMOTE TEMPERATURE SENSORS IN AN ARRAY WIRED TO THE CENTRAL THERMOSTAT.

4. THE UNIT SUPPLY FAN SHALL OPERATE CONTINUOUSLY. OUTDOOR AIR INTAKE DAMPERS SHALL OPEN TO MINIMUM POSITION WHENEVER THE SUPPLY FAN OPERATES.

5. WHEN THE SYSTEM SWITCH IS SET TO "COOL" AND THE SPACE TEMPERATURE RISES ABOVE THE SETPOINT, THE REFRIGERATION COMPRESSOR(S) SHALL START IN A STAGED SEQUENCE TO PROVIDE COOLED AIR TO THE SPACE UNTIL THE SETPOINT TEMPERATURE IS SATISFIED, AT WHICH TIME THE COMPRESSOR(S) SHALL STOP IN A STAGED SEQUENCE.

6. IN OCCUPIED SPACES, WHEN THE SYSTEM SWITCH IS SET TO "HEAT" AND THE SPACE TEMPERATURE DROPS BELOW THE SETPOINT, THE GAS-FIRED FURNACE SHALL OPERATE IN A STAGED SEQUENCE TO PROVIDE HEATED AIR TO THE SPACE UNTIL THE SETPOINT TEMPERATURE IS SATISFIED, AT WHICH TIME THE HEATER SHALL TURN OFF IN A STAGED SEQUENCE.

7. IN ADDITION TO STANDARD SAFETY DEVICES PROVIDED BY THE EQUIPMENT MANUFACTURERS, PROVIDE A DUCT MOUNTED SMOKE DETECTOR IN THE RETURN AIR DUCT OF EACH UNIT WITH A A SUPPLY AIR FLOW OF 2000 CFM OR GREATER. PROVIDE AND AUXILIARY INTERLOCK FROM THE FIRE ALARM SYSTEM TO SHUT DOWN THE UNIT SUPPLY FAN(S) AND CLOSE ALL DAMPER(S) ON A 'FIRE CONDITION' SIGNAL.

DUCTWORK LEGEND

NEW WORK	
	SQUARE TO ROUND SIDE TAKEOFF WITH MANUAL VOLUME DAMPER
	LAY-IN DIFFUSER WITH FLEX. DUCT CONN. (5'-0" MAX. LENGTH)
4R	RADIUS ELBOW R=1/2 DUCT WIDTH MINIMUM
4X	ECCENTRIC TRANSITION X=30° MAXIMUM
4X	CONCENTRIC TRANSITION X=30° MAXIMUM
FOT	TRANSITION FLAT ON TOP
FOB	TRANSITION FLAT ON BOTTOM
	OFFSET UP OR DOWN AS INDICATED
	MANUAL VOLUME DAMPER WITH LOCKING QUADRANT
	MOTOR OPERATED OPPOSED BLADE CONTROL DAMPER
	SUPPLY DUCT UP
	SUPPLY DUCT DOWN
	RETURN/EXHAUST DUCT UP
	RETURN/EXHAUST DUCT DOWN
	U/L 555 DYNAMIC 1½ HR. FIRE DAMPER (PROVIDE ACCESS DOOR)
	FLEXIBLE DUCT CONNECTION
T	THERMOSTAT OR TEMPERATURE SENSOR
CFM	SUPPLY AIRFLOW (CUBIC FEET PER MINUTE)
OAD	OUTDOOR AIR DAMPER

FAN SCHEDULE

TAG	MFR ---- MODEL No.	FAN TYPE	SERVICE	AIRFLOW CFM	E.S.P. in. W.C.	RPM	MOTOR HP	ELECTRICAL	ACCESSORIES/REMARKS
EF-1	GREENHECK SP-B70	CEILING	RESTROOM	50	.125	675	16W	115/1ø	①②③④
EF-2	GREENHECK SP-B70	CEILING	RESTROOM	50	.125	675	16W	115/1ø	①②③④
EF-3	GREENHECK SP-B70	CEILING	RESTROOM	50	.125	675	16W	115/1ø	①②③④

① INTEGRAL BACK DRAFT DAMPER
② INTERLOCK WITH ROOM LIGHT SWITCH/OCCUPANCY SENSOR
③ EQUAL BY ACME OR COOK.
④ SOLID STATE SPEED CONTROLLER PROVIDED & INSTALLED BY THIS CONTRACTOR.

PACKAGED UNIT SCHEDULE

TAG	MANUFACTURER ---- MODEL	FAN DATA: SUPPLY CFM	VENT CFM	E.S.P.	HP	RPM	COMPRESSOR DATA: COMPR. TYPE	QTY	REFRIG	CHARGE LBS.	DX COOLING PERFORMANCE: THC	SHC	EDB EWB	LDB LWB	MIN. E.E.R.	HEATING PERFORMANCE: STAGES	MBH INPUT	MBH OUTPUT	EAT	LAT	ELECTRICAL DATA: V/Ph/Hz	COMP. RLA	FAN FLA	MCA	MAX C/B	MISC. DATA: OPER WT LBS	FILTER TYPE	SOUND dB	ACCESSORIES
PU-1	TRANE YZC090F3RLA**C6C50	2400	175	0.7"	2.75	VARI.	SCROLL	1	R-410A	8.7	80.9	80.3	80/67	55/54	11.2	1	120	97	–	–	208/3/60	21.45	5.7	40	60	850	2" PLEAT	82	COAS, GFCI, 5TDR, RASD, FRST, CRHT, NSBT, LOWL, HUMI, MOAD
PU-2	TRANE YZC090F3RLA**C6C50	2400	175	0.7"	2.75	VARI.	SCROLL	1	R-410A	8.7	80.9	80.3	80/67	55/54	11.2	1	120	97	–	–	208/3/60	21.45	5.7	40	60	850	2" PLEAT	82	COAS, GFCI, 5TDR, RASD, FRST, CRHT, NSBT, LOWL, HUMI, MOAD

HUMI – HUMIDISTAT
MOAD – MOTORIZED OUTSIDE AIR DAMPER
LOWL – LOW LIMIT CONTROL
COAS – COASTAL COIL PROTECTION
GFCI – SERVICE RECEPTACLE – GFCI
5TDR – 5 MIN. TIME DELAY RELAY
RASD – RETURN AIR SMOKE DETECTOR
FRST – FROSTAT
CRHT – CRANKCASE HEATER
NSBT – NIGHT SETBACK THERMOSTAT

REGISTER, DIFFUSER, GRILLE SCHEDULE

TAG	MFR. ---- MODEL	MOUNTING & TYPE	BORDER	FACE	MATERIAL	FINISH	OBD	ACCESSORIES / REMARKS
CD	TITUS TMS-AA	LAY-IN, ROUND NECK SUPPLY DIFFUSER	TYPE 3	LOUVERED	ALUMINUM	#26 WHITE	YES	2x2 MODULE
RAR	TITUS 350FL	SURFACE MTD. RETURN REGISTER	TYPE 1	FIXED BLADE	ALUMINUM	#26 WHITE	YES	
RAR2	TITUS 50F	LAY-IN MTD. RETURN/EXHAUST GRILLE	TYPE 3	EGGCRATE	ALUMINUM	#26 WHITE	YES	1/2" x 1/2" ALUM. GRID
R1	TITUS 300FS	SURFACE MTD. SUPPLY REGISTER	–	ADJ. BLADE	ALUMINUM	#26 WHITE	YES	DOUBLE DEFLECTION

2015 INTERNATIONAL MECHANICAL CODE VENTILATION REQUIREMENTS

SPACE NAME	USE OF SPACE	FLOOR AREA SQ. FT.	OCCUPANT DENSITY (PEOPLE/1000 SQ. FT.)	TOTAL PEOPLE	PEOPLE OUTDOOR AIRFLOW RATE (CFM/PERSON)	PEOPLE OUTSIDE AIR CFM	AREA OUTDOOR AIRFLOW RATE (CFM/SQ. FT.)	AREA OUTSIDE AIR CFM	TOTAL OUTSIDE AIR CFM	EXHAUST RATE (CFM/SQ. FT.)	EXHAUST AIR CFM
SHOP	WAREHOUSE	2560	–	–	–	–	0.12	307	307	–	–
OFFICE 1	OFFICE	150	5	4	5	10	0.06	9	19	–	–
OFFICE 2	OFFICE	150	5	4	5	10	0.06	9	19	–	–
RESTROOM	RESTROOM	70	–	–	–	–	–	–	–	50 CFM PER FIXTURE	50
RESTROOM	RESTROOM	70	–	–	–	–	–	–	–	50 CFM PER FIXTURE	50
JANITOR	STORAGE	30	–	–	–	–	0.12	4	4	–	–
ELECTRICAL	ELECTRICAL	30	–	–	–	–	–	–	–	–	–
SERVER	ELECTRICAL	75	–	–	–	–	–	–	–	–	–
BUILDING TOTALS		3135				20		329	349		100

DUCTLESS SPLIT SYSTEM SCHEDULE

SYSTEM TYPE		SPLIT SYSTEM WALL MOUNT
DESIGN BASIS MANUFACTURER		MITSUBISHI
INDOOR EVAPORATOR UNIT	MARK	DFC-1
	DESIGN BASIS MODEL	MSY-GL12NA
	TOTAL CAPACITY (MBH)	12
	SENSIBLE HEAT FACTOR	.81
	ENT. DB/WB °F	75/63
	VOLTAGE	208/1ø
	MCA/FAN FLA	1.0/.76
OUTDOOR AIR COOLED CONDENSING UNIT	MARK	DCU-1
	DESIGN BASIS MODEL	MUY-GL12NA
	REFRIGERANT	R-410a
	AMBIENT TEMP °F	95
	VOLTS/PHASE	208/1ø
	MCA/FAN FLA	7/.5
	MIN. SEER	24

THE UNIT MANUFACTURER SHALL PROVIDE A REFRIGERANT PIPING DIAGRAM INDICATING PIPE SIZES AND ALL REQUIRED VALVES AND SPECIALTIES.
* THE INDOOR UNIT POWER IS NORMALLY SUB-FED FROM THE OUTDOOR UNIT, BUT MAY BE FIELD CONVERTED.

LPK architects
LPK ARCHITECTS, P.A.
2206 18TH ST, SUITE D
GULFPORT, MISSISSIPPI 39501
P.O. BOX 7117
GULFPORT, MISSISSIPPI 39506
P: 228.382.3122
F: 601.693.8640

These documents are the sole property of LPK Architects P.A. and are not to reused. Any alterations, revisions or reuse of these documents without the written consent of LPK Architects will result in all sureties and responsibilities for the entire project becoming null and void.
copyright LPK Architects, P.A.

www.GSEeng.com
GSE CONSULTING ENGINEERS
Gulfport Mobile Nashville
1816 Pass Rd. Gulfport, MS 39501
(T)228-864-5050 (F)228-864-7744

PROFESSIONAL SEAL:
JOHN T. WADE REGISTERED PROFESSIONAL ENGINEER 14647 STATE OF MISSISSIPPI
11/10/17

REVISION	DATE	DRAWN	APPROVED

UNITED STATES AIR FORCE — AIR EDUCATION AND TRAINING COMMAND
KEESLER AIR FORCE BASE
BILOXI — MISSISSIPPI
OFFICE OF CIVIL ENGINEERS

36 AES WAREHOUSE/OFFICE

MECHANICAL NOTES, SYMBOLS, & LEGENDS

SUBMITTED: (Chief of Contracts Design) D. KINMAN		RECOMMENDED: (Chief of Engineering) A. MARASCA	FACILITY NUMBER: XX.X
DESIGNED: JDT	CHECKED: JTW	SCALE: AS NOTED	DRAWING NUMBER: M-001
DRAWN: JDT	DATE: 10-04-17	PROJECT NUMBER: MAHG 17-9002	SHEET X OF

GENERAL NOTES:

1. THIS DRAWING IS DIAGRAMMATICAL. COORDINATE ALL DUCT SIZES, TURNS, DROPS AND LOCATIONS WITH ALL OTHER DISCIPLINES TO ENSURE NO CONFLICTS. CONTRACTOR TO VERIFY THAT ALL EQUIPMENT, AS SHOWN ON THESE DRAWINGS, WILL NOT CONFLICT WITH ANY DRAINS, SCUTTLES, JOINTS, VENTS, ETC.
2. ENSURE ALL EXHAUST AND SANITARY VENTS ARE A MINIMUM OF 10'-0" AWAY FROM OUTSIDE AIR INTAKES.
3. PROVIDE REMOTE TEMPERATURE SENSOR RETURN DUCT OF PU-1 AND PU-2, LOCATE TEMPERATURE CONTROLS WHERE SHOWN.

KEYED NOTES:

1. 6"ø EXHAUST DUCT UP TO GREENHECK GRS-6, OR EQUIVALENT ROOF CAP. PROVIDE ROOF CURB SIZED TO MATCH ROOF CAP, COORDINATE CURB WITH ROOF CONSTRUCTION. PROVIDE ALL NECESSARY ACCESSORIES/CONNECTORS TO ENSURE A LEAK-FREE INSTALLATION.
2. DUCTWORK UP EXTERIOR OF BUILDING, COORDINATE WITH ARCHITECTURAL AND STRUCTURAL DRAWINGS. KEEP INTERIOR DUCTWORK TIGHT TO STRUCTURE.
3. PROVIDE HVAC SHUTDOWN SWITCH MOUNTED AT EXIT, FAIL CLOSED.
4. FIELD-FABRICATE 30/12 ECONOMIZER/OUTSIDE AIR DUCT, SECURED TO UNIT AND TO EXTEND 10'-0" ABOVE GRADE, TERMINATE WITH GOOSENECK AND BIRDSCREEN. COORDINATE INSTALLATION WITH PACKAGE UNIT MANUFACTURER. PROVIDE ANY REQUIRED ACCESSORIES.

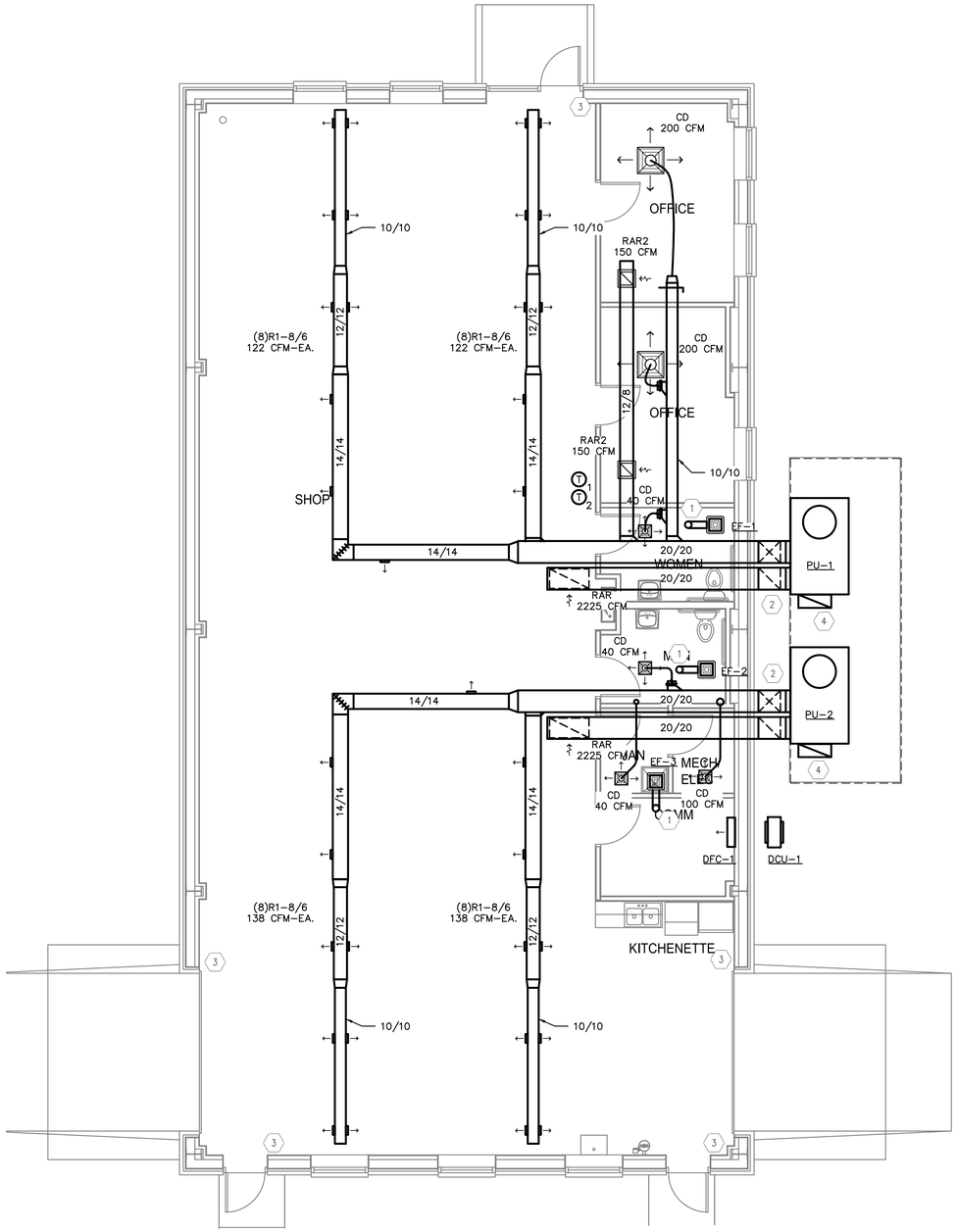

1 HVAC PLAN
SCALE: 3/16" = 1'-0"

FLEX DUCT SCHEDULE	
AIRFLOW	SIZE
0-90 CFM	6"ø
100-140 CFM	7"ø
150-200 CFM	8"ø
205-260 CFM	9"ø
265-360 CFM	10"ø
365-550 CFM	12"ø

NOTE: PROVIDE FLEX DUCT TAKE-OFFS WITH AIR SCOOP AND BALANCING DAMPER AT ALL ROUND SA BRANCH DUCTS. FLEX DUCTS SHALL BE EQUAL TO TITUS FLEX DUCT TYPE T-26. MAXIMUM FLEX DUCT SHALL BE 8'-0". PROVIDE EQUAL SIZE HARD DUCT RUNOUTS FOR TAKEOFFS OVER 8'-0" LONG. EXTERNALLY INSULATE ROUND HARD DUCTS WITH 2" THICK, 3/4# DUCT WRAP WITH FOIL FACING.

LPK architects

LPK ARCHITECTS, P.A.
2206 18TH ST, SUITE D
GULFPORT, MISSISSIPPI 39501
P.O. BOX 7117
GULFPORT, MISSISSIPPI 39506
P: 228.382.3122
F: 601.693.8640

These documents are the sole property of LPK Architects P.A. and are not to reused. Any alterations, revisions or reuse of these documents without the written consent of LPK Architects will result in all sunrites and responsibilities for the entire project becoming null and void.
copyright LPK Architects, P.A.

www.GSEeng.com
GSE
CONSULTING ENGINEERS
Gulfport Mobile Nashville
1816 Pass Rd. Gulfport, MS 39501
(T)228-864-5050 (F)228-864-7744

PROFESSIONAL SEAL:

JOHN T. WADE
REGISTERED PROFESSIONAL
ENGINEER
14567
STATE OF MISSISSIPPI
11/10/17

REVISION	DATE	DRAWN	APPROVED

UNITED STATES AIR FORCE — AIR EDUCATION AND TRAINING COMMAND

KEESLER AIR FORCE BASE
BILOXI — MISSISSIPPI
OFFICE OF CIVIL ENGINEERS

36 AES WAREHOUSE/OFFICE

MECHANICAL PLAN

SUBMITTED: (Chief of Contracts Design) D. KINMAN		RECOMMENDED: (Chief of Engineering) A. MARASCA	FACILITY NUMBER: XX.X
DESIGNED: JDT	CHECKED: JTW	SCALE: AS NOTED	DRAWING NUMBER: M-101
DRAWN: JDT	DATE: 10-04-17	PROJECT NUMBER: MAHG 17-9002	SHEET X OF

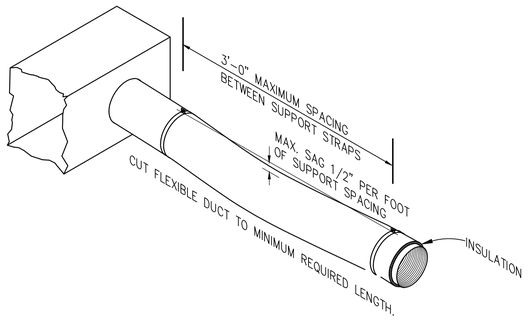

FLEX DUCT SUPPORT DETAIL
SCALE: NONE 1

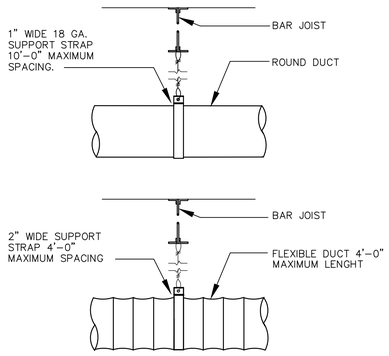

DUCT SUPPORT DETAIL
SCALE: NONE 2

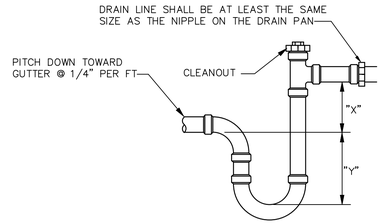

NOTES:

LENGTHS "X" AND "Y" SHALL BE DETERMINED BY ROOFTOP UNIT EQUIPMENT BASED ON TOTAL STATIC PRESSURE

"X" AND "Y" SHALL BE EQUAL TO MINIMUM 1/2 TOTAL UNIT STATIC PRESSURE.

ALL CONDENSATE PIPING SHALL BE SLOPED AT 1/4" PER FOOT

CONDENSATE TRAP DETAIL
SCALE: NONE 3

LPK architects

LPK ARCHITECTS, P.A.
2206 18TH ST, SUITE D
GULFPORT, MISSISSIPPI 39501
P.O. BOX 7117
GULFPORT, MISSISSIPPI 39506
P: 228.382.3122
F: 601.693.8640

These documents are the sole property of LPK Architects P.A. and are not to reused. Any alterations, revisions or reuse of these documents without the written consent of LPK Architects will result in all sundies and responsibilities for the entire project becoming null and void.

copyright LPK Architects, P.A.

www.GSEeng.com
GSE
CONSULTING ENGINEERS
Gulfport Mobile Nashville
1816 Pass Rd. Gulfport, MS 39501
(T)228-864-5050 (F)228-864-7744

PROFESSIONAL SEAL:

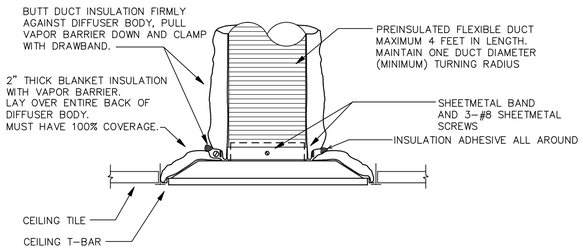

LAY-IN DIFFUSER DETAIL
SCALE: NONE 4

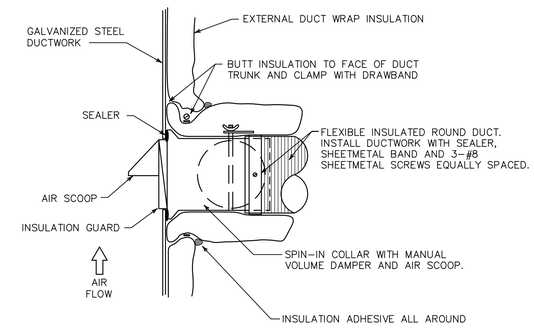

ROUND DUCT SPIN-IN DETAIL
SCALE: NONE 5

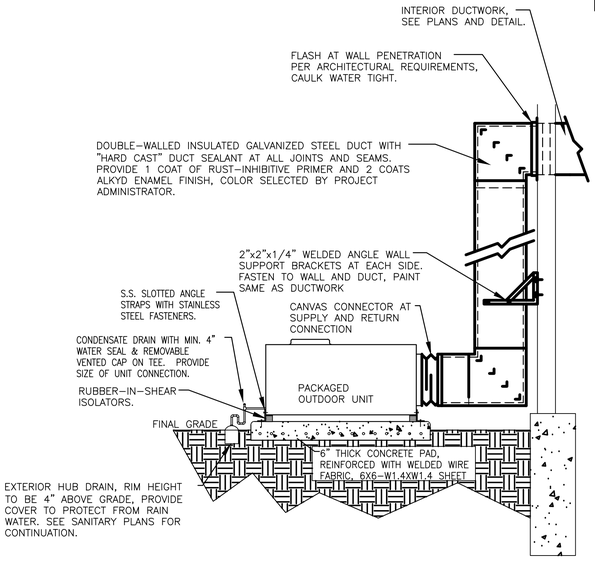

PACKAGE UNIT DETAIL
SCALE: NONE 6

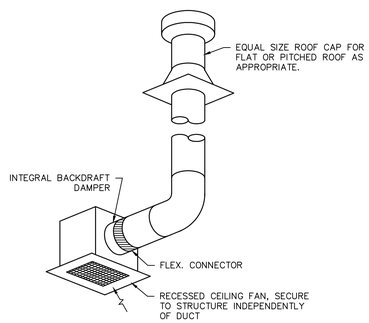

CEILING EXHAUST FAN DETAIL
SCALE: NONE 7

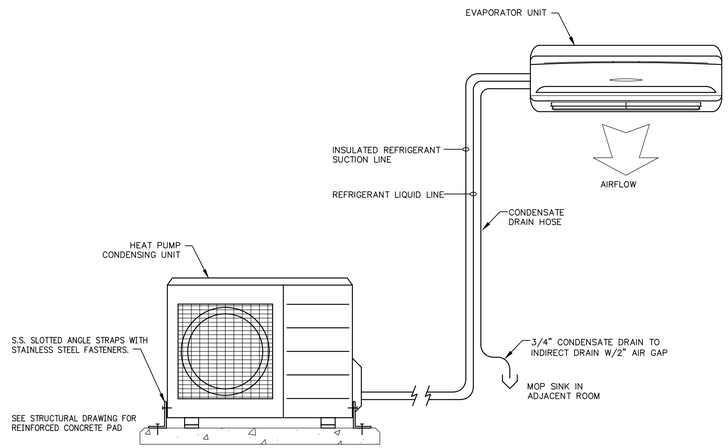

CURB ATTACHMENT DETAIL
SCALE: NONE 8

REVISION	DATE	DRAWN	APPROVED

UNITED STATES AIR FORCE — AIR EDUCATION AND TRAINING COMMAND

KEESLER AIR FORCE BASE
BILOXI — MISSISSIPPI

OFFICE OF CIVIL ENGINEERS

36 AES WAREHOUSE/OFFICE

MECHANICAL DETAILS

SUBMITTED: (Chief of Contracts Design)	RECOMMENDED: (Chief of Engineering)	FACILITY NUMBER:
D. KINMAN	A. MARASCA	XX.X
DESIGNED: JDT	**CHECKED:** JTW	**SCALE:** AS NOTED	**DRAWING NUMBER:** M-501
DRAWN: JDT	**DATE:** 10-04-17	**PROJECT NUMBER:** MAHG 17-9002	**SHEET** X **OF** ____

KEYED NOTES:

1. CONDUIT DUCTBANK CROSSES EXISTING UNDERGROUND POWER AND EXISTING GAS LINES. CONTRACTOR TO LOCATE PRIOR TO DIGGING.
2. CONDUIT DUCTBANK PATHWAY IS ROUTED BETWEEN EXISTING UNDERGROUND FIBER OPTIC AND EXISTING GAS LINES. CONTRACTOR TO LOCATE PRIOR TO DIGGING.
3. CONDUIT DUCTBANK PATHWAY IS ROUTED BETWEEN EXISTING UNDERGROUND FIBER OPTIC LINES. CONTRACTOR TO LOCATE PRIOR TO DIGGING.

GENERAL NOTES:

1. ALL WORK SHOWN ON DRAWING IS THE RESPONSIBILTY OF THE ELECTRICAL CONTRACTOR.

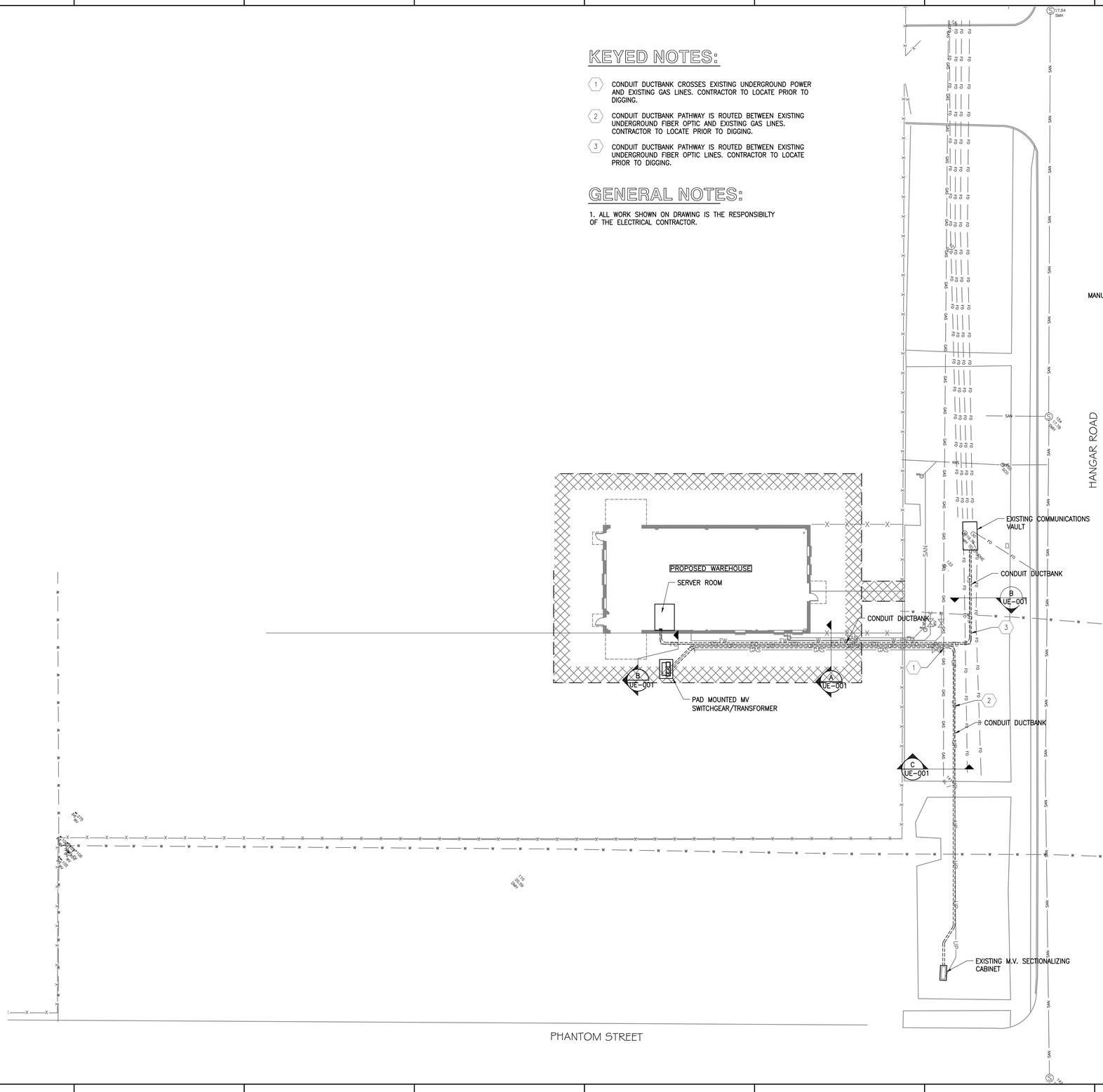

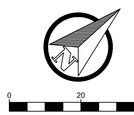

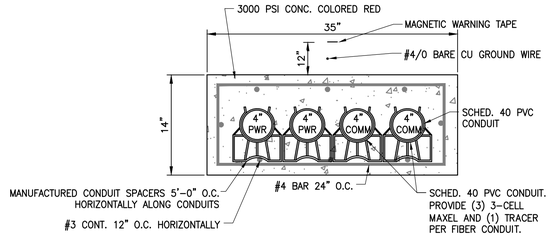

A CONDUIT DUCTBANK

N.T.S.

SEE ELECTRICAL PLAN E101, AND RISER DIAGRAM E-601 FOR POWER AND COMM. CABLES.

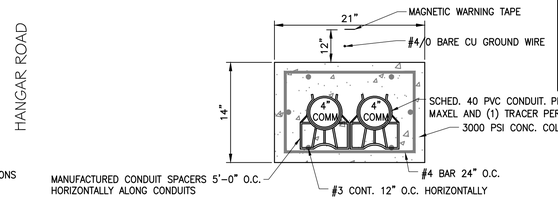

B CONDUIT DUCTBANK

N.T.S.

SEE ELECTRICAL PLAN E101, AND RISER DIAGRAM E-601 FOR POWER AND COMM. CABLES.

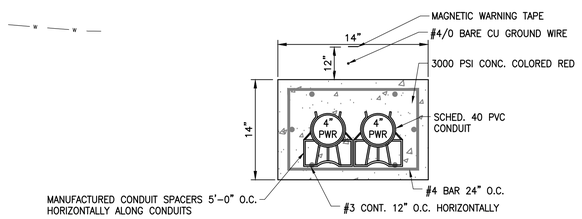

C CONDUIT DUCTBANK

N.T.S.

SEE ELECTRICAL PLAN E101, AND RISER DIAGRAM E-601 FOR POWER AND COMM. CABLES.

LPK architects

LPK ARCHITECTS, P.A.
2208 18TH ST, SUITE D
GULFPORT, MISSISSIPPI 39501
P.O. BOX 7117
GULFPORT, MISSISSIPPI 39506
P: 228.382.3122
F: 601.693.8640

These documents are the sole property of LPK Architects P.A. and are not to reused. Any alterations, revisions or reuse of these documents without the written consent of LPK Architects will result in all sureties and responsibilities for the entire project becoming null and void.

copyright LPK Architects, P.A.

www.GSEeng.com
GSE
CONSULTING ENGINEERS
Gulfport Mobile Nashville
1816 Pass Rd. Gulfport, MS 39501
(T)228-864-5050 (F)228-864-7744

PROFESSIONAL SEAL:

ARJUN THOMAS VARGHESE REGISTERED PROFESSIONAL ENGINEER 27208 STATE OF MISSISSIPPI

11/10/17

REVISION	DATE	DRAWN	APPROVED

UNITED STATES AIR FORCE — AIR EDUCATION AND TRAINING COMMAND

KEESLER AIR FORCE BASE
BILOXI — MS39534PPI
OFFICE OF CIVIL ENGINEERS

36 AES WAREHOUSE/OFFICE

SITE ELECTRICAL PLAN

SUBMITTED: (Chief of Contracts Design)	RECOMMENDED: (Chief of Engineering)	FACILITY NUMBER:
D. KINMAN	A. MARASCA	XX.X
DESIGNED: SWS	CHECKED: ATV	SCALE: AS INDICATED
DRAWN: SWS	DATE: 10-04-17	PROJECT NUMBER: MAHG 17-9002
		DRAWING NUMBER: UE-001
		SHEET _____ OF _____

NOTES

1. INSTALLATION SHALL COMPLY WITH NATIONAL ELECTRICAL CODE, STATE BUILDING CODE AND ALL REQUIREMENTS OF THE LOCAL INSPECTOR (FURNISH INSPECTION CERTIFICATE). ALL WORK SHALL BE BY LICENSED ELECTRICAL CONTRACTOR.

2. ALL BRANCH CIRCUITS SHALL BE IN ZINC–COATED EMT OR RIGID CONDUIT AS PERMITTED BY THE NATIONAL ELECTRICAL CODE. SCHEDULE 40 PVC CONDUIT MAY BE USED ONLY FOR THE SECONDARY UNDERGROUND SERVICE. THE UNDERGROUND TELEPHONE SERVICE CONDUIT, AND BRANCH CIRCUIT TELEPHONE SYSTEM CONDUITS LOCATED BELOW THE FLOOR SLAB ON GRADE OR BURIED ON THE EXTERIOR OF THE BUILDING, OR IN CONCRETE BLOCK WALLS. ALL CONDUIT SHALL BE 3/4" MIN. SIZE. EMT FITTINGS SHALL BE STEEL COMPRESSION TYPE.

3. ALL CONDUCTORS SHALL BE COPPER TYPE THHN OR THWN SOLID FOR #10 AWG OR #12 AWG AND STRANDED FOR ALL LARGER SIZES.

4. ALL WIRING SHALL BE CONCEALED IN WALLS, UNDER SLAB OR ABOVE SUSPENDED CEILING SPACE.

5. CONDUITS MAY BE RUN EXPOSED IN MECHANICAL AREAS. CONDUITS SHALL BE RUN PARALLEL OR PERPENDICULAR TO STRUCTURAL ELEMENTS AND SHALL BE RUN IN GROUPS. SEAL ALL PENETRATIONS AIR TIGHT AROUND ALL CONDUITS WHEN PASSING INTO MECHANICAL ROOMS.

6. ALL LIGHT FIXTURES SHALL BE SUPPORTED INDEPENDENTLY OF THE CEILING SYSTEM. 2x4 TROFFERS SHALL BE SUPPORTED WITH CABLE FROM ALL FOUR CORNERS.

7. FOR HOME RUNS ON 20 AMP CIRCUITS EXCEEDING SEVENTY FIVE (75) FEET FROM THE PANEL BOARD, USE #10 AWG MIN.

8. ALL MOUNTING HEIGHTS ARE GIVEN TO THE BOTTOM OF THE DEVICE UNLESS NOTED OTHERWISE.

9. THE LOCATION OF ALL WALL MOUNTED DEVICES, INCLUDING MOUNTING HEIGHTS, SHALL BE FIELD VERIFIED WITH THE ARCHITECT PRIOR TO INSTALLATION.

10. THE ELECTRICAL CONTRACTOR SHALL PROVIDE ALL NECESSARY DISCONNECTS, SWITCHES AND RECEPTACLES UNDER THE ELECTRICAL BID AND SHALL INCLUDE ALL NECESSARY CIRCUITS AND FINAL CONNECTIONS TO THE EQUIPMENT PROVIDED BY ALL SUPPLIERS, UNLESS NOTED OTHERWISE BY OTHER DISCIPLINES.

11. ALL ELECTRICAL EQUIPMENT SHALL BE INSTALLED SO THAT ALL CODE REQUIRED AND MANUFACTURER RECOMMENDED SERVICING CLEARANCES ARE MAINTAINED.

12. BIDDING CONTRACTORS MUST VISIT THE SITE, REVIEW ALL CONSTRUCTION DOCUMENTS, AND OBTAIN WRITTEN COPIES OF ALL REFERENCED CODES AND ORDINANCES PRIOR TO SUBMITTING BIDS. NO ALLOWANCE WILL BE MADE FOR ADVERSE CONDITIONS WHICH WERE ASCERTAINABLE PRIOR TO BID TIME.

13. GROUND TELEPHONE EQUIPMENT TO THE ELECTRICAL SERVICE GROUNDING SYSTEM PER N.E.C.

14. OBTAIN INFORMATION REGARDING THE ROUGH–IN AND FINAL CONNECTION REQUIREMENTS FOR EQUIPMENT TO BE PROVIDED BY THE OWNER OR OTHER CONTRACTORS PRIOR TO COMMENCING WORK.

15. PROVIDE PULL WIRE IN ALL EMPTY CONDUIT.

16. ALL CIRCUIT BREAKERS IN PANEL SHALL BE SERIES RATED WITH MAIN BREAKER OR FULLY RATED FOR THE SYSTEM.

17. THE ELECTRICAL CONTRACTOR SHALL COORDINATE AND VERIFY THE ELECTRICAL SERVICE ARRANGEMENTS WITH THE LOCAL POWER COMPANY AND WITH OWNER SUPPLIED SITE PLAN. THE CONTRACTOR SHALL PROVIDE ALL NECESSARY EQUIPMENT FOR A COMPLETE INSTALLATION.

18. CIRCUIT BREAKERS SHALL BE RATED TO WITHSTAND THE MAXIMUM AVAILABLE FAULT CURRENT AT THE SITE AS DETERMINED BY THE LOCAL UTILITY. E.C. SHALL COORDINATE WITH LOCAL UTILITY BEFORE STARTING WORK.

19. ALL BUILDING SYSTEM GROUND RODS SHALL BE BONDED TOGETHER TO FORM A SINGLE GROUNDING SYSTEM. GROUNDING SYSTEM SHALL COMPLY WITH N.E.C. ARTICLE 250.

20. THE WORD "PROVIDE" MEANS FURNISH AND INSTALL.

21. MC CABLE IS ALLOWED FOR FINAL CONNECTIONS TO EQUIPMENT. FINAL CONNECTION TO EQUIPMENT IS LIMITED TO 72" MAXIMUM LENGTH.

22. THE ELECTRICAL CONTRACTOR SHALL OBTAIN AND REVIEW THE MECHANICAL AND SPECIAL EQUIPMENT SUBMITTALS PRIOR TO SUBMITTING THE ELECTRICAL SUBMITTALS. ANY ELECTRICAL EQUIPMENT, CONDUIT, AND WIRE SIZE CHANGES RESULTING FROM THIS REVIEW SHALL ALSO BE SUBMITTED FOR APPROVAL.

23. THE CONTRACTOR SHALL LEAVE THE ENTIRE ELECTRICAL SYSTEM INSTALLED IN PROPER WORKING ORDER, AND SHALL REPLACE WITHOUT ADDITIONAL COST, ALL WORK OR MATERIAL WHICH MAY DEVELOP DEFECTS, (ORDINARY WEAR AND TEAR OR DAMAGE RESULTING FROM IMPROPER HANDLING EXCEPTED) WITHIN A PERIOD OF ONE (1) YEAR FROM THE DATE OF FINAL ACCEPTANCE BY THE OWNER.

24. ELECTRICAL CONTRACTOR IS RESPONSIBLE FOR ALL FITTINGS AND NECESSARY EQUIPMENT FOR LIGHT FIXTURE MOUNTING, AND INSTALLATION.

25. ALL FIRE BARRIER PENETRATIONS SHALL BE SEALED WITH APPROVED FIRE SEALANT. COORDINATE WITH ARCHITECTURAL PLANS FOR ALL RATED WALLS AND CEILINGS PRIOR TO BID SO AN UNDERSTANDING OF NUMBER OF SEALS REQUIRED, AND DETERMINE METHOD FOR MINIMIZING THE SEAL REQUIREMENTS.

LEGEND

- 20 AMP, 125 VAC, 2–POLE, 3–WIRE, GROUNDING TYPE, DUPLEX RECEPTACLE. FLUSH WALL MOUNTED 16" A.F.F. UNLESS NOTED OTHERWISE, WITH MATCHING FACEPLATE.
- WP G — 20 AMP, 125 VAC, 2–POLE, 3–WIRE, GROUNDING TYPE, WEATHER RESISTANT DUPLEX RECEPTACLE, WITH GROUND FAULT INTERRUPT, MTD. @ 16" A.F.F. UNLESS NOTED, WITH WEATHER–PROOF CAST ALUMINUM COVER.
- G — 20 AMP, 125 VAC, 2–POLE, 3–WIRE, GROUNDING TYPE, DUPLEX RECEPTACLE, WITH GROUND FAULT INTERRUPT, MTD. @ 16" A.F.F. UNLESS NOTED, WITH MATCHING FACEPLATE.
- M — 20 AMP, 125 VAC, 2–POLE, 3–WIRE, GROUNDING TYPE, DUPLEX RECEPTACLE, WITH "CONTROLLED" MARKING FOR AUTO SHUT OFF. MTD @ 16" A.F.F. UNLESS NOTED, WITH MATCHING FACEPLATE.
- 20 AMP, 125 VAC, 2–POLE, 3–WIRE, GROUNDING TYPE, DOUBLE DUPLEX RECEPTACLE. FLUSH WALL MOUNTED 16" A.F.F. UNLESS NOTED OTHERWISE, WITH MATCHING FACEPLATE.
- $ — 20 AMP, 120/277 VAC SINGLE POLE TOGGLE SWITCH – FLUSH WALL MOUNTED 48" A.F.F. UNLESS NOTED OTHERWISE. COORDINATE FINISH(ES) WITH ARCHITECT. SUBSCRIPT INDICATES AS FOLLOWS:
  3 – 20 AMP, 120/277 VAC THREE WAY TOGGLE SWITCH, HEAVY DUTY.
  4 – 20 AMP, 120/277 VAC FOUR WAY TOGGLE SWITCH.
  S – WALL MOUNTED OCCUPANCY SENSOR SWITCH ULTRASONIC/INFRARED WITH MATCHING FACEPLATE.
- (S) — CEILING MOUNTED BACKBOX WITH 3/4" CONDUIT WITH PULL WIRE TO 6" ABOVE CEILING FOR SECURITY CAMERA. COORDINATE REQUIREMENTS WITH OWNER AND SECURITY CONTRACTOR. PROVIDE SUPPORT & MOUNTING HARDWARE AS REQUIRED.
- (B) — JUNCTION BOX WITH 3/4" CONDUIT WITH PULL WIRE TO 6" ABOVE CEILING FOR DOOR BUZZER SWITCH. COORDINATE REQUIREMENTS WITH OWNER AND SECURITY CONTRACTOR. PROVIDE SUPPORT & MOUNTING HARDWARE AS REQUIRED.
- △ — DATA & DUPLEX RECEPTACLE COMBO OUTLET BOX MTD @ 16" A.F.F. UNLESS NOTED FLUSH MOUNTED 1 GANG WALL BOX. CONTRACTOR
- ▭ — LIGHTING FIXTURE, SEE FIXTURE SCHEDULE
- ◯ — JUNCTION BOX LOCATION MOUNTED AS NOTED ON DRAWING, SIZED AS REQUIRED BY EQUIPMENT BEING SERVED.
- DISCONNECT SWITCH, SIZE AND TYPE AS NOTED.
- HOME RUN CONDUIT, CIRCUIT NUMBER AS INDICATED ON DRAWINGS, HASHMARKS INDICATE HOT NEUTRAL AND GROUND.
- LOW VOLTAGE WIRING.
- CONDUIT RUN IN WALLS OR CEILING.
- UNIT POWER PANEL SEE UNIT PANEL SCHEDULE FOR THIS DRAWING
- DUAL TECHNOLOGY CEILING–MOUNTED 360° OCCUPANCY SENSOR, WATTSTOPPER DT–300. SEE LIGHTING CONTROL WIRING DIAGRAM FOR ADDITIONAL INFORMATION. MOUNT AT LOCATION AS INDICATED ON PLANS. DEVICE SHALL BE PROGRAMMED SUCH THAT EITHER TECHNOLOGY SHALL TRIGGER LIGHTS "ON" AND EITHER TECHNOLOGY SHALL "HOLD" LIGHTS "ON". TIME DELAY DURATION SHALL BE 30 MINUTES MINIMUM. SEE MANUFACTURERS INSTRUCTIONS FOR APPROPRIATE DIP SWITCH SETTINGS.
- (C) — CEILING–MOUNTED OCCUPANCY SENSOR, WATTSTOPPER WT–2255. SEE LIGHTING CONTROL WIRING DIAGRAM FOR ADDITIONAL INFORMATION. MOUNT AT LOCATION AS INDICATED ON PLANS. DEVICE SHALL BE PROGRAMMED SUCH THAT EITHER TECHNOLOGY SHALL TRIGGER LIGHTS "ON" AND EITHER TECHNOLOGY SHALL "HOLD" LIGHTS "ON". TIME DELAY DURATION SHALL BE 30 MINUTES MINIMUM. SEE MANUFACTURERS INSTRUCTIONS FOR APPROPRIATE DIP SWITCH SETTINGS.
- (PP) — 1–RELAY POWER PACK.
- "LED" EXIT LIGHT. DARKENED QUADRANTS INDICATE ILLUMINATED FACES, ARROWS AS INDICATED. LETTER(S) DENOTE TYPE – SEE LIGHTING FIXTURE SCHEDULE.
  EX – EXIT LIGHT LITHONIA # LQM–S–W–SEE PLAN–R–120/277ELN
- INSTALL 4 DUPLEX RECEPTACLE OUTLETS IN TELECOM FLOOR BOX. SEE LEGEND ON SHEET E002 FOR REQUIREMENTS.

SYMBOL NOTES:

1. ALL OUTLETS ARE TO BE FLUSH MOUNTED.
2. MOUNTING HEIGHTS ARE FROM THE CENTER LINE OF THE DEVICE.
3. ALL SINGLE GANG AND TWO GANG DEVICES SHALL USE A 4" SQ. BOX WITH EXTENSION RING.
4. ALL MULTI – GANG DEVICES SHALL USE A COMMON COVER PLATE
5. A.F.F. INDICATES MOUNTING HEIGHT ABOVE FINISHED FLOOR TO CENTERLINE OF FIXTURE OR DEVICE UNLESS OTHERWISE NOTED.
6. A.F.G. INDICATES MOUNTING HEIGHT ABOVE FINISHED GRADE.

Luminaire Schedule

Label	Symbol	Description	Notes	Lumens/Lamp	Lum. Watts
F		LITHONIA # 2BLT4 40L ADP EZ1 LP935 (EL 14L FOR EMERGENCY)	PROVIDE MOUNTING HARDWARE REQUIRED	N.A.	38
LB1		LITHONIA # TMSL–20000LM–NO LOUVER–MVOLT–GZ10–35K–90CRI–WH (MOUNT 12'–0" AFF)	PROVIDE MOUNTING HARDWARE REQUIRED	N.A.	161
W		LITHONIA # WST LED P3 40K VW MVOLT DDBXD	PROVIDE MOUNTING HARDWARE REQUIRED	N.A.	50
FS		LITHONIA # STL4–40L–EXA1–LP835–LSXRHL	PROVIDE MOUNTING HARDWARE REQUIRED	N.A.	35

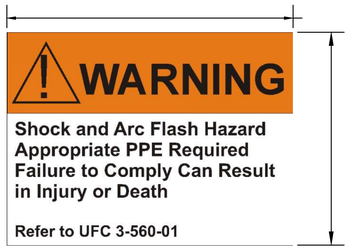

NOTES:

1. PROVIDE SELF–ADHESIVE VINYL LABEL TO AFFIX TO ELECTRICAL EQUIPMENT TO WARN OF ARC FLASH HAZARDS.
2. THE LABEL FORMAT AND TEXT SHALL BE IN ACCORDANCE WITH THE FIGURE.
3. THE LABEL SHALL BE LOCATED ON THE EQUIPMENT TO BE CLEARLY VISIBLE TO QUALIFIED PERSONS BEFORE EXAMINATION, ADJUSTMENT, SERVICING, OR MAINTENANCE OF THE EQUIPMENT.
4. THE SIZE OF THE LABEL SHALL BE:

EQUIPMENT TYPE	HEIGHT	WIDTH
INDOOR	2"	3"
OUTDOOR	4"	6"

5. A DOWNLOADABLE WINDOWS METAFILE IS AVAILABLE ON THE WHOLE BUILDING DESIGN GUIDE WEBSITE (WWW.WDBG.ORG) FOR USE IN A LABEL MAKING MACHINE.

ARC FLASH WARNING LABEL

SKETCH DATE	JANUARY 2008	STYLE	AF–1

LPK architects

LPK ARCHITECTS, P.A.
2006 18TH ST, SUITE D
GULFPORT, MISSISSIPPI 39501
P.O. BOX 7117
GULFPORT, MISSISSIPPI 39506
P: 228.382.3122
F: 601.693.8640

These documents are the sole property of LPK Architects P.A. and are not to reused. Any alterations, revisions or reuse of these documents without the written consent of LPK Architects will result in all sureties and responsibilities for the entire project becoming null and void.

copyright LPK Architects, P.A.

www.GSEeng.com
GSE CONSULTING ENGINEERS
Gulfport Mobile Nashville
1816 Pass Rd. Gulfport, MS 39501
(T)228-864-5050 (F)228-864-7744

PROFESSIONAL SEAL:

11/10/17

REVISION	DATE		DRAWN	APPROVED

UNITED STATES AIR FORCE — AIR EDUCATION AND TRAINING COMMAND

KEESLER AIR FORCE BASE
BILOXI — MISSISSIPPI

OFFICE OF CIVIL ENGINEERS

36 AES WAREHOUSE/OFFICE

ELECTRICAL NOTES, LEGENDS & SCHEDULES

SUBMITTED: (Chief of Contracts Design) D. KINMAN		RECOMMENDED: (Chief of Engineering) A. MARASCA	FACILITY NUMBER: XX.X
DESIGNED: MAH	CHECKED: ATV	SCALE: AS NOTED	DRAWING NUMBER: E-001
DRAWN: MAH	DATE: 10-04-17	PROJECT NUMBER: MAHG 17-9002	SHEET _____ OF _____

COMMUNICATIONS SPECIFICATIONS

DIVISION 27

PART I. GENERAL PROVISIONS

1. SCOPE: PROVIDE ALL LABOR, MATERIAL, AND EQUIPMENT IN ACCORDANCE WITH THESE SPECIFICATIONS, AND THE ACCOMPANYING DRAWINGS TO PROVIDE A COMPLETE AND PROPERLY OPERATING COMMUNICATIONS SYSTEM.

   A. THE CONTRACTOR SHALL FURNISH AND INSTALL ALL OF THE FOLLOWING MATERIAL AND EQUIPMENT UNDER THIS DIVISION OF THE SPECIFICATIONS, UNLESS NOTED OTHERWISE: RACKS; PATCH PANELS; CABLING; FACEPLATES; CABLE TRAY; CONDUIT; PULLSTRINGS; EQUIPMENT IDENTIFICATION; ECT.

2. THE PURPOSE OF THIS DOCUMENT IS TO SUPPLEMENT TELECOMMUNICATIONS INDUSTRY ASSOCIATION/ELECTRONIC INDUSTRY ALLIANCE (TIA/EIA) COMMERCIAL STANDARDS FOR PREMISE WIRING (LOCAL AREA NETWORK CABLING) ON KEESLER AFB.

3. NEW CONSTRUCTION OR RENOVATIONS PROGRAMMING PREMISE WIRING WORK REQUIRES COORDINATION WITH THE 81 CS/SCXP PLANS AND PROGRAMS OFFICE, CONTACT # 376-7107 PRIOR TO IMPLEMENTATION.

4. ALL PREMISE WIRING INSTALLED ON KEESLER AFB WILL CONFORM TO TIA/EIA WIRING STANDARDS LISTED AT THE END OF THIS DOCUMENT AND THE SUPPLEMENTAL GUIDANCE CONTAINED IN THE ATTACHMENTS WITHIN THIS DOCUMENT.

5. ANY DEVIATIONS FROM THE ATTACHED STANDARDS AND THIS SUPPLEMENT SHOULD BE COORDINATED AND APPROVED BY THE 81 CS/SCXP.

6. CONTRACTUAL RESPONSIBILITIES:

   A. CONTRACTORS SELECTED TO COMPLETE PREMISE WIRING WORK MUST HAVE AT LEAST ONE EXPERIENCED\TECHNICALLY CERTIFIED BUILDING INDUSTRY CONSULTING SERVICE INTERNATIONAL (BICSI) TECHNICIAN ON SITE.
   B. PROVIDE AS-BUILT DRAWINGS FOR THE PREMISE WIRING WORK ACCOMPLISHED IDENTIFYING INSTALLATION/RELOCATION WORK.
   C. PROVIDE TEST RESULTS FOR NEW\RELOCATED PREMISE WIRING WORK ACCOMPLISHED.
   D. CONTRACTORS SHALL BE RESPONSIBLE FOR RESTORING WORK AREAS TO ORIGINAL CONDITION.
   E. 81 CS QUALITY ASSURANCE OFFICE 81 CS/SCQ WILL BE THE APPROVING AUTHORITY FOR PREMISE WIRING WORK ACCOMPLISHED IN NEW CONSTRUCTION OR RENOVATIONS.

PART II. MATERIAL AND EQUIPMENT

1. RACKS WILL BE LABELED ON THE FRONT AND REAR AT THE TOP AND BOTTOM ON A PERMANENT PART OF THE RACK. TEXT ON LABELS SHALL BE MACHINE PRINTED WITHOUT SERIFS, UPPERCASE AND LARGE ENOUGH TO BE READ WHILE STANDING NEAR THE RACK. THE LABEL COLOR WILL CONTRAST WITH SURFACE UPON WHICH IT IS AFFIXED (WHITE ON A DARK SURFACE, BLACK ON A LIGHT SURFACE)(ANSI/TIA/EIA-606-A-1 SECTION 11).

2. ALL COPPER CABLES, CONNECTORS, PORTS, JACKS, OUTLETS, AND PATCH PANELS SHALL BE TIA/EIA CATEGORY 6e RATED.

   A. DATA CABLE COLOR SHALL BE BLUE.
   B. TERMINATIONS: ALL PREMISE CABLING SUPPORTING A LOCAL AREA NETWORK WILL BE TERMINATED USING 568B STANDARDS. PAIRS WILL NOT BE UNTWISTED MORE THAN .5 INCH. CABLE JACKET WILL NOT BE STRIPPED BACK MORE THAN 1 INCH. NO NICKS ON THE INNER CONDUCTORS.

3. CABLE MANAGEMENT: THE CONTRACTOR SHALL ENSURE A NEAT AND ORDERLY INSTALLATION UTILIZING PROPER CABLE MANAGEMENT IAW CURRENT APPLICABLE STANDARDS. DATA DROPS SHALL BE ROUTED IN A MANNER TO ENSURE THE CABLES ARE PROTECTED AND AESTHETICALLY PLEASING ALONG THE CABLE PATH. METAL RACEWAYS (CABLE LADDER OR WIRE BASKET) SHALL BE INSTALLED AND/OR UTILIZED IN ALL COMMUNICATION ROOMS.

   A. CABLE TRAYS SHALL BE INSTALLED AND/OR UTILIZED IN ALL COMMUNICATION ROOMS.
   B. CABLES WILL BE INDEPENDENTLY SUPPORTED OFF THE CEILING WITH SUPPORTS NO MORE THAN 60 INCHES APART.
   C. CABLE ROUTE SHOULD AVOID FLUORESCENT LIGHT BALLASTS, ELECTRICAL CABLES AND MOTORS.
   D. CABLE JACKETS MUST NOT BE DISTORTED. VELCRO OR NYLON ARE ACCEPTABLE – VELCRO IS BETTER AT PROTECTING CABLE GEOMETRY. STAPLES WILL NOT BE USED
   E. ANY BUILDING PENETRATIONS (TO INCLUDE WALL, CEILING, OR FLOOR), SHALL BE IN COMPLIANCE WITH NATIONAL FIRE PROTECTION AGENCY (NFPA) REGULATIONS AND COORDINATED WITH CSC'S STRUCTURAL OFFICE AND FIRE DEPARTMENT.
   F. SERVICE LOOPS: CABLE SHALL BE NEATLY BUNDLED AND SUPPORTED.
      1). BACKBONE:
         a. FIBER (12-STRAND SM, 'SC' CONNECTORS) – 50 FEET
         b. COPPER (25-PAIR) – 10 FEET
      2). MANHOLE: FIBER AND COPPER SHALL HAVE ONE COMPLETE LOOP AROUND THE INSIDE OF THE MANHOLE.
      3). HORIZONTAL: 18" AT DROP AND 5 FEET AT RACK IN COMMUNICATIONS ROOM.

4. LABELING: ALL LABELING SHALL BE MACHINE GENERATED, WITHOUT SERIFS, UPPERCASE AND LARGE ENOUGH TO BE EASILY READ (ANSI/TIA/EIA-606-A-1 SECTION 11). THE NAMING SCHEME SHALL ALSO BE COORDINATED WITH THE 81ST COMMUNICATIONS SQUADRON (81 CS/SCXP).

   A. CABLES – ALL CABLES WILL BE LABELED ON BOTH ENDS WITH ENCODED IDENTIFIERS PER (ANSI/TIA/EIA-606-A-1 SECTION 11) AND LOCATED WITHIN 12 INCHES OF FACEPLATE AND/OR PATCH PANEL.

5. GROUNDING: ALL GROUNDS WILL BE LABELED (ANSI/TIA-607-B PARA 7.8).

   A. ALL GROUND CONNECTIONS WILL HAVE A CLEAR MARGIN OF BARE METAL-TO-METAL CONTACT(ANSI/TIA-607-B PARA 7.6)
   B. CABINETS, RACKS AND OTHER ENCLOSURES SHALL NOT BE BONDED SERIALLY, EACH SHALL HAVE THEIR OWN DEDICATED BONDING CONDUCTOR (ANSI/TIA-607-B PARA 7.1.4).

6. FIRESTOPPING: FIRESTOP BRAND SHALL BE 3M. DUCT SEAL SHALL BE USED FOR SEALING BACKBONE CONDUITS ENTERING THE COMMUNICATIONS ROOM.

7. PLYWOOD: PLYWOOD SHALL BE USED ON (2) WALLS AS INDICATED ON CONSTRUCTION DOCUMENTS. NO PAINT SHALL NOT BE APPLIED AND STAMP SHALL BE VISIIBLE ON ALL PIECES.

PART III. REFERENCES

1. BICSI TDM MANUAL – BUILDING INDUSTRIES CONSULTING SERVICES INTERNATIONAL (BICSI) TELECOMMUNICATIONS DISTRIBUTION METHODS (TDM) MANUAL.
2. NFPA 70 (2008) – NATIONAL FIRE PROTECTION ASSOCIATION (NFPA), NATIONAL ELECTRIC CODE (NEC).
3. 29 CFR 1910.268 – OCCUPATIONAL SAFETY AND HEALTH STANDARDS,TELECOMMUNICATIONS.
4. ANSI – AMERICAN NATIONAL STANDARDS INSTITUTE (ANSI) AND INTERNET STANDARDS RESOURCES.
5. EIA/TIA – ENGINEERING: EIA/TIA STANDARDS SEE COMMODITY SPECIFIC APPENDICES AND INDIVIDUAL TASK ORDERS.
6. TIA/EIA-526-7 (FEB 2002) – MEASUREMENT OF OPTICAL POWER LOSS OF INSTALLED SINGLE-MODE FIBER CABLE PLANT – OFSTP-7.
7. ANSI/TIA-568-C.0 (FEB2009) – GENERIC TELECOMMUNICATIONS CABLING FOR CUSTOMER PREMISES.
8. ANSI/TIA-568-C.1 (FEB 2009) – COMMERCIAL BUILDING TELECOMMUNICATIONS CABLING STANDARD.
9. TIA/EIA-568-B.2-10 (MAR 2008) – TRANSMISSION PERFORMANCE SPECIFICATIONS FOR 4-PAIR 100 OHM AUGMENTED CATEGORY 6E CABLING.
10. ANSI/TIA-568-C.3 (JUN 2008) – OPTICAL CABLING COMPONENTS STANDARD.
11. ASTM D4566 (2008) – STANDARD TEST METHODS FOR ELECTRICAL PERFORMANCE PROPERTIES OF INSULATIONS AND JACKETS FOR TELECOMMUNICATIONS WIRE AND CABLE.
12. TIA/EIA-569-B (OCT 2004) – COMMERCIAL BUILDING STANDARDS FOR TELECOMMUNICATIONS PATHWAYS AND SPACES.
13. TIA/EIA-570-B (APR 2004) – RESIDENTIAL TELECOMMUNICATIONS CABLING STANDARD.
14. TIA/EIA-598-C (JAN 2005) – OPTICAL FIBER CABLE COLOR CODING.
15. TIA/EIA-606-A (MAY 2002) – ADMINISTRATION STANDARD FOR THE TELECOMMUNICATIONS INFRASTRUCTURE OF COMMERCIAL BUILDINGS.
16. J-STD-607-A (OCT 2002) – COMMERCIAL BUILDING GROUNDING AND BONDING REQUIREMENTS FOR TELECOMMUNICATIONS.
17. TIA/EIA-758-A (AUG 2004) – CUSTOMER-OWNED OUTSIDE PLANT TELECOMMUNICATIONS INFRASTRUCTURE STANDARD.
18. EIA-310-D (SEP 1992) – RACKS, PANELS AND ASSOCIATED EQUIPMENT.
19. ICEA S-80-576 (2002) – CATEGORY 1 & 2 INDIVIDUALLY UNSHIELDED TWISTED PAIR INDOOR CABLES FOR USE IN COMMUNICATIONS WIRING SYSTEMS.
20. ICEA S-83-596 (2001) – FIBER OPTIC PREMISES DISTRIBUTION CABLE.
21. GR-409, ISSUE 2 (NOV 2008) – GENERIC REQUIREMENTS FOR INDOOR FIBER OPTIC CABLE.
22. GR-20, ISSUE 3 (MAY 2008) – GENERIC REQUIREMENTS FOR OPTICAL FIBER AND OPTICAL FIBER CABLE.
23. NEMA TC 2 (2003) – ELECTRICAL POLYVINYL CHLORIDE (PVC) TUBING AND CONDUIT.
24. NEMA TC 6&8 (2003) – PVC PLASTIC UTILITIES DUCT FOR UNDERGROUND INSTALLATIONS.
25. NEMA TC 9 (2004) – FITTINGS FOR PVC PLASTIC UTILITIES DUCT FOR UNDERGROUND INSTALLATION.
26. RUS BULLETIN 1751F-643 – UNDERGROUND PLANT DESIGN.
27. RUS BULLETIN 1753F-801(PC-5A) – RUS STANDARD FOR SERVICE INSTALLATIONS AT CUSTOMER ACCESS LOCATIONS.
28. RUS BULLETIN 345-54 (PE-52) – RUS SPECIFICATION FOR TELEPHONE CABLE SPLICING CONNECTORS.
29. RUS BULLETIN 1753F-601 – RUS SPECIFICATIONS FOR FILLED FIBEROPTIC CABLES (PE-90).

PART IV. EXECUTION

1. TESTS: ALL TEST RESULTS SHALL BE SUBMITTED TO THE ENGINEER AND OWNER FOR REVIEW AND APPROVAL.

   A. FIBER OPTIC TESTING: CONTRACTOR SHALL USE AN OTDR AND OPM.
   B. COPPER: CONTRACTOR SHALL USE A FLUKE TESTER CURRENT ON SERVICING.

2. GUARANTEE: FURNISH A GUARANTEE IN WRITING TO THE ENTIRE INSTALLATION IS FREE FROM IMPROPER GROUNDS, AND IS FREE FROM DEFECTS OF MATERIALS AND WORKMANSHIP FOR A PERIOD OF ONE (1) YEAR FROM DATE OF FINAL ACCEPTANCE. IN ADDITION, DURING THE TERM OF THIS GUARANTEE, THE REPAIR AND/OR REPLACEMENT OF ANY DEFECTIVE WORK, AND ALL RESULTING DAMAGES SHALL BE MADE AT NO ADDITIONAL EXPENSE TO THE OWNER.
3. CLEAN-UP: LEAVE THE ELECTRICAL PORTION OF THE WORK IN A CLEAN AND FINISHED CONDITION.
4. AS-BUILT DRAWINGS: MAINTAIN AS-BUILT DRAWINGS, UPDATED DAILY DURING CONSTRUCTION, AND PRESENT THE OWNER WITH ONE SET UPON COMPLETION. PROVIDE THE OWNER'S PERSONNEL WITH ON-SITE INSTRUCTION IN THE OPERATION AND MAINTENANCE OF THE COMPLETED COMMUNICATION SYSTEM.

COMMUNICATIONS SYMBOLS

- 2CX / 2D — TELECOMMUNICATIONS OUTLET, AS NOTED ON PLANS. 2D = 2 CAT6e CABLES, 2CX = 2 COAX CABLES.
- 2D — TELECOMMUNICATIONS OUTLET, MOUNTED AT CEILING FOR WAP. 2D = 2 CAT6e CABLES, WAP = WIRELESS ACCESS POINT (EQUIPMENT BY AFB).
- (4)4D — COMMUNICATIONS/POWER FLOOR BOX, MOUNTED FLUSH IN FINISHED FLOOR. (4)4D = 16 CAT6e CABLES. EVOLUTION SERIES EFB8S, 8-GANG FLOOR BOX. ONE SIDE OF FLOOR BOX SHALL BE USED FOR ELECTRICAL OUTLETS AND ONE SIDE SHALL BE USED FOR COMMUNICATIONS CABLING. EACH FLOORBOX SHALL HAVE (4) 4-PORT FACEPLATES WITH (16) CAT6e CABLES AND JACKS. PROVIDE (2) 1-1/4" CONDUITS FOR ELECTRICAL AND (2) 1-1/4" CONDUITS FOR COMMUNICATIONS ROUTED TO CABLE TRAY. PROVIDE PULLSTRINGS.
- VERTICAL WIRE MANAGER, SIZE PER SPECIFICATIONS.
- 2-POST FLOOR MOUNTED COMMUNICATIONS RACK.
- GROUNDING BUSBAR, TYPE, SIZE AND MOUNTING HEIGHT AS INDICATED IN CONSTRUCTION DOCUMENTS.
- CABLE TRAY, TYPE, SIZE AND MOUNTING HEIGHT AS INDICATED IN CONSTRUCTION DOCUMENTS

COMM ROOM

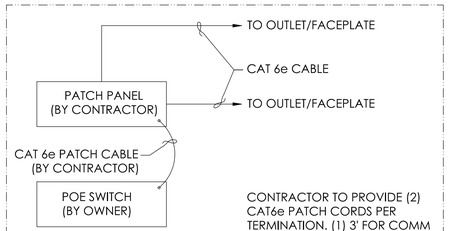

LPK architects
LPK ARCHITECTS, P.A.
2206 18TH ST., SUITE D
GULFPORT, MISSISSIPPI 39501
P.O. BOX 7117
GULFPORT, MISSISSIPPI 39506
P: 228.382.3122
F: 601.693.8640
These documents are the sole property of LPK Architects P.A. and are not to reused. Any alterations, revisions or reuse of these documents without the written consent of LPK Architects will result in all sunrites and responsibilities for the entire project becoming null and void.
copyright LPK Architects, P.A.

www.GSEeng.com
GSE CONSULTING ENGINEERS
Gulfport Mobile Nashville
1816 Pass Rd. Gulfport, MS 39501
(T)228-864-5050 (F)228-864-7744

PROFESSIONAL SEAL:

ARVIN THOMAS MARASCA — REGISTERED PROFESSIONAL — ENGINEER — 27208 — STATE OF MISSISSIPPI
11/10/17

REVISION	DATE		DRAWN	APPROVED

UNITED STATES AIR FORCE — AIR EDUCATION AND TRAINING COMMAND

KEESLER AIR FORCE BASE
BILOXI — MISSISSIPPI
OFFICE OF CIVIL ENGINEERS

36 AES WAREHOUSE/OFFICE

COMMUNICATIONS LEGEND & SPECS

SUBMITTED: (Chief of Contracts Design) D. KINMAN		RECOMMENDED: (Chief of Engineering) A. MARASCA	FACILITY NUMBER: XX.X
DESIGNED: MAH	CHECKED: ATV	SCALE: AS NOTED	DRAWING NUMBER: E-002
DRAWN: MAH	DATE: 10-04-17	PROJECT NUMBER: MAHG 17-9002	SHEET ____ OF ____

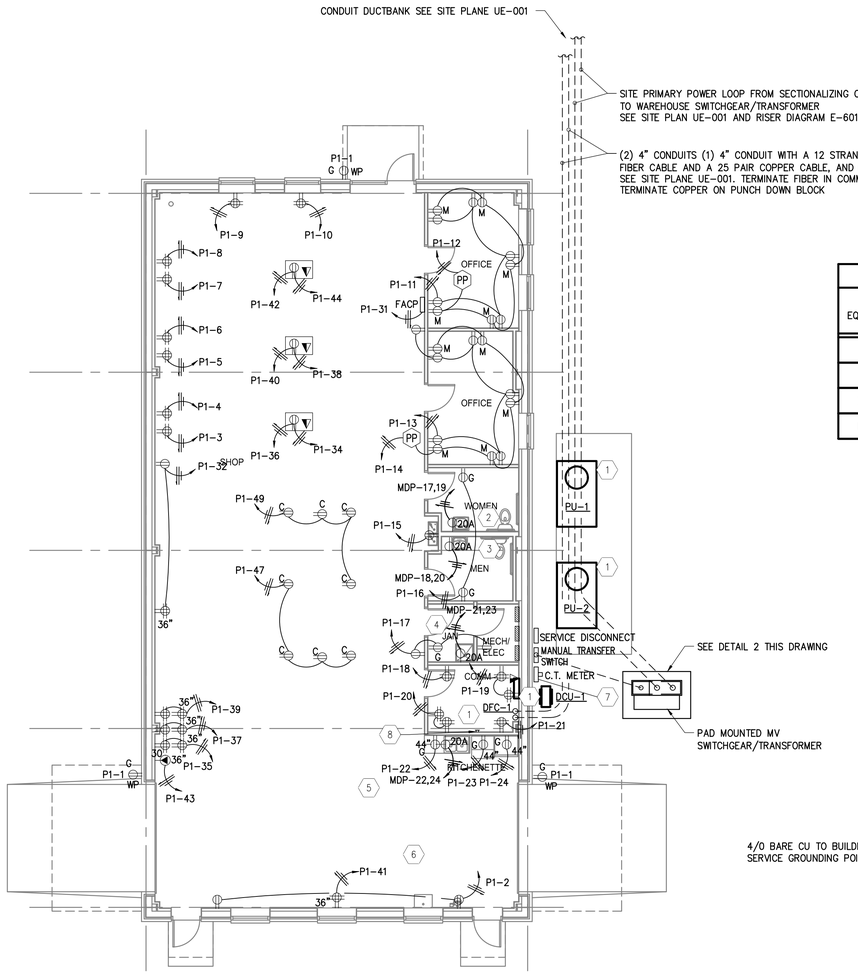

1 ELECTRICAL POWER PLAN
SCALE: 1/8" = 1'-0"

KEYED NOTES:

1. SEE ELECTRICAL EQUIPMENT SCHEDULE THIS DRAWING FOR HVAC EQUIPMENT CIRCUIT CHARACTERISTICS.
2. WH-1 MOUNTED UNDER SINK
3. WH-2 MOUNTED UNDER SINK
4. WH-3 MOUNTED ABOVE JANITOR SINK
5. WH-4 MOUNTED UNDER SINK
6. WH-5 TO BE MOUNTED BELOW EMERGENCY EYE WASH
7. ELECTRICAL METER EQUAL SCHNEIDER ELECTRIC ION8650.
8. TGB, SEE DETAIL 3 ON DRAWING E-501.

ELECTRICAL EQUIPMENT SCHEDULE

EQUIPMENT NAME	ELECTRICAL DATA					WIRING DATA				ELECTRICAL NOTES
	KVA	FLA	MCA	CB	V/Ph/Hz	COND SIZE	GND SIZE	CONDUIT SIZE	DISC SIZE	
PU-1	13.6	38	40	60A	208/3	#6	#10	1"	60A-3P NEMA 3R	MDP-7,9,11
PU-2	13.6	38	40	60A	208/3	#6	#10	1"	60A-3P NEMA 3R	MDP-8,10,12
DCU-1	1.5	7.5	9	20A	208/1	#12	#12	3/4"	30A-2P NEMA 3R	MDP-13,15
DFC-1	.36	1.76	.43	20A	208/1	#12	#12	3/4"	30A-2P NEMA 1	MDP-14,16

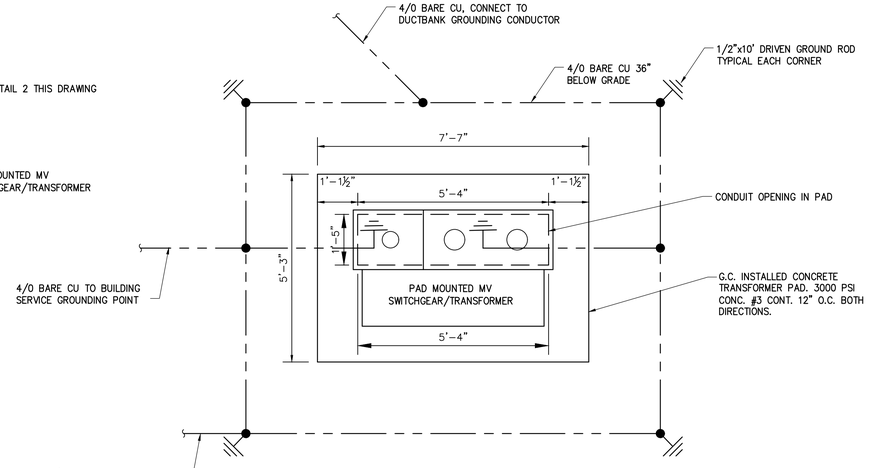

2 TRANSFORMER CONCRETE PAD/GROUNDING DETAIL
SCALE: 1/2" = 1'-0"

NOTE: EXACT SIZE OF CONCRETE PAD AND OPENING SHOULD BE COORDINATED IN FIELD WITH FINAL TRANSFORMER SELECTION PRIOR TO ANY CONSTRUCTION OF PAD.

LPK architects
LPK ARCHITECTS, P.A.
2208 18TH ST, SUITE D
GULFPORT, MISSISSIPPI 39501
P.O. BOX 7117
GULFPORT, MISSISSIPPI 39506
P: 228.382.3122
F: 601.693.8640
These documents are the sole property of LPK Architects P.A. and are not to reused. Any alterations, revisions or reuse of these documents without the written consent of LPK Architects will result in all sunrites and responsibilities for the entire project becoming null and void.
copyright LPK Architects, P.A.

www.GSEeng.com
GSE CONSULTING ENGINEERS
Gulfport Mobile Nashville
1816 Pass Rd. Gulfport, MS 39501
(T)228-864-5050 (F)228-864-7744

PROFESSIONAL SEAL:
ARVIN THOMAS VARNESE REGISTERED PROFESSIONAL ENGINEER 27208 STATE OF MISSISSIPPI
11/10/17

REVISION	DATE		DRAWN	APPROVED

UNITED STATES AIR FORCE — AIR EDUCATION AND TRAINING COMMAND
KEESLER AIR FORCE BASE
BILOXI — MISSISSIPPI
OFFICE OF CIVIL ENGINEERS

36 AES WAREHOUSE/OFFICE

POWER PLAN

SUBMITTED: (Chief of Contracts Design)	RECOMMENDED: (Chief of Engineering)	FACILITY NUMBER:
D. KINMAN	A. MARASCA	XX.X
DESIGNED: MAH	CHECKED: ATV	SCALE: AS NOTED	DRAWING NUMBER: E-101
DRAWN: MAH	DATE: 10-04-17	PROJECT NUMBER: MAHG 17-9002	SHEET ____ OF ____

KEYED NOTES:

1. ROUTE CIRCUIT THROUGH LIGHTING CONTACTOR AND TIME CLOCK. LIGHTING CONTACTOR AND TIME CLOCK SHALL BE LOCATED ADJACENT TO SOURCE PANEL.
2. INSTALL DOUBLE RED OBSTRUCTION LIGHT ON ROOF, CONNECT TO CIRCUIT P1-30. OBSTRUCTION LIGHT TO BE CROUSE HINDS MODEL 43961-116-GR.

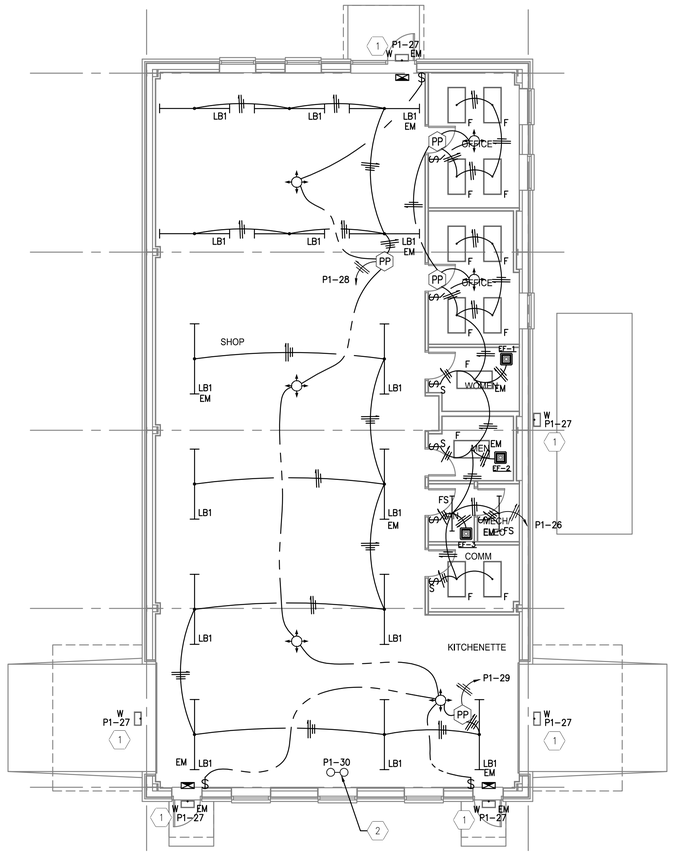

1 ENLARGED LIGHTING PLAN - A&B
SCALE: 1/8" = 1'-0"

LPK architects

LPK ARCHITECTS, P.A.
2208 18TH ST, SUITE D
GULFPORT, MISSISSIPPI 39501
P.O. BOX 7117
GULFPORT, MISSISSIPPI 39506
P: 228.382.3122
F: 601.693.8640

These documents are the sole property of LPK Architects P.A. and are not to reused. Any alterations, revisions or reuse of these documents without the written consent of LPK Architects will result in all sureties and responsibilities for the entire project becoming null and void.

copyright LPK Architects, P.A.

www.GSEeng.com
GSE
CONSULTING ENGINEERS
Gulfport Mobile Nashville
1816 Pass Rd. Gulfport, MS 39501
(T)228-864-5050 (F)228-864-7744

PROFESSIONAL SEAL:

ARUN THOMAS VARGHESE
REGISTERED PROFESSIONAL
ENGINEER
27208
STATE OF MISSISSIPPI
11/10/17

REVISION	DATE	DRAWN	APPROVED

UNITED STATES AIR FORCE
AIR EDUCATION AND TRAINING COMMAND
KEESLER AIR FORCE BASE
BILOXI — MISSISSIPPI
OFFICE OF CIVIL ENGINEERS

36 AES WAREHOUSE/OFFICE

LIGHTING PLAN

SUBMITTED: (Chief of Contracts Design)		RECOMMENDED: (Chief of Engineering)	FACILITY NUMBER:
D. KINMAN		A. MARASCA	XX.X
DESIGNED: MAH	CHECKED: ATV	SCALE: AS NOTED	DRAWING NUMBER: E-102
DRAWN: MAH	DATE: 10-04-17	PROJECT NUMBER: MAHG 17-9002	SHEET ____ OF ____

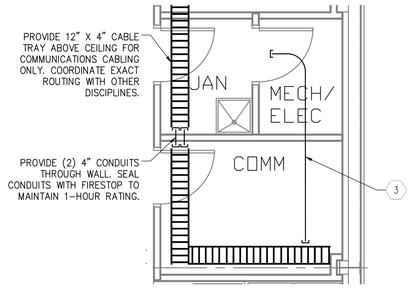

2 COMMUNICATIONS DISTRIBUTION PLAN
SCALE: 1/4" = 1'-0"

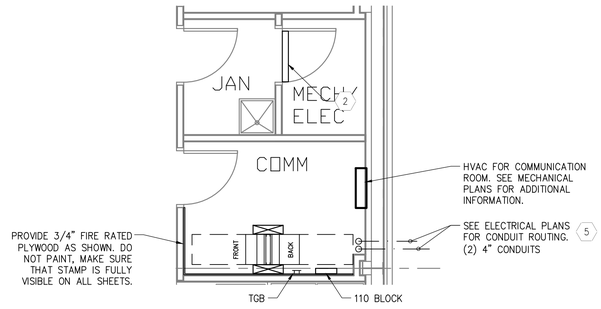

3 COMMUNICATIONS ENLARGED PLAN
SCALE: 1/4" = 1'-0"

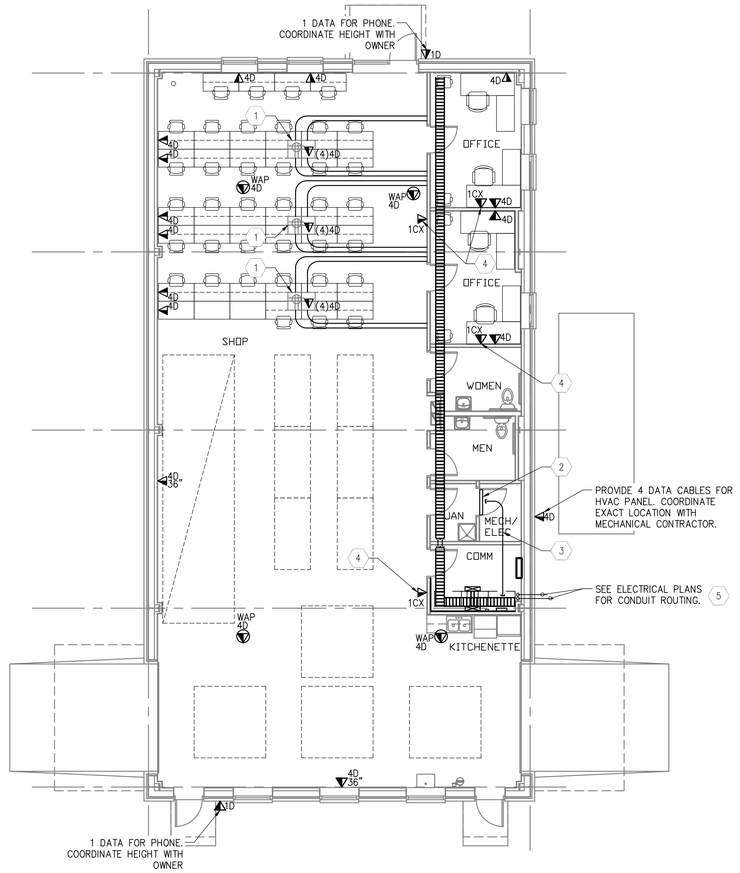

1 COMMUNICATIONS PLAN
SCALE: 1/8" = 1'-0"

ITEM	DESCRIPTION	QTY
1	19" OPEN RACK – 2 POST	1
2	RACK MOUNTED VERTICAL WIRE MANAGER	2
3	2U HORIZONTAL CABLE MANAGER	9
4	FIBER DISTRIBUTION UNIT	1
5	POWER DISTRIBUTION UNIT (BY AFB)	1
6	SINGLE MODE ADAPTOR PANEL WITH SC CONNECTORS	2
7	2U 48 PORT CATEGORY 6e PATCH PANEL	3
8	1U 24 PORT CATEGORY 6e PATCH PANEL FOR ANALOG FROM 110 BLOCK	1
9	UPS (BY AFB)	1
10	RACK MOUNTED HORIZONTAL BUSBAR	1
11	1U ACTIVE EQUIPMENT (BY AFB)	4
12		

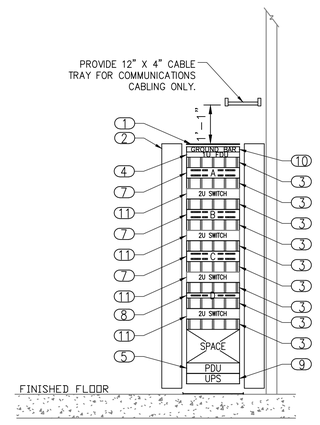

4 COMMUNICATIONS RACK ELEVATION
SCALE: 1/2" = 1'-0"

KEYED NOTES:

1. 8-GANG FLOOR BOX WITH 16 DATA CABLES IN (4) 4-PORT FACEPLATES. (4) DUPLEX RECEPTACLES. SEE COMMUNICATIONS LEGEND FOR ADDITIONAL INFORMATION. PROVIDE (4) 1-1/4" CONDUITS, (2) FOR COMMUNICATIONS AND (2) FOR ELECTRICAL ROUTED UNDERGROUND AND UP WALL TO CABLE TRAY ABOVE CEILING..
2. CATV DEMARCATION POINT LOCATED ABOVE DOOR. ALL CATV CABLES SHALL BE ROUTED TO THIS LOCATION.
3. PROVIDE (1) 2" CONDUIT FROM CATV AREA TO CABLE TRAY. PROVIDE PULL STRING.
4. PROVIDE RG-6 FROM CATV OUTLET TO CATV DEMARCATION POINT.
5. PROVIDE (3) 3-CELL MAXEL AND (1) TRACER PER CONDUIT.

LPK architects
LPK ARCHITECTS, P.A.
2208 18TH ST, SUITE D
GULFPORT, MISSISSIPPI 39501
P.O. BOX 7117
GULFPORT, MISSISSIPPI 39506
P: 228.382.3122
F: 601.693.8640
These documents are the sole property of LPK Architects P.A. and are not to reused. Any alterations, revisions or reuse of these documents without the written consent of LPK Architects will result in all sunrites and responsibilities for the entire project becoming null and void.
copyright LPK Architects, P.A.

www.GSEeng.com
GSE
CONSULTING ENGINEERS
Gulfport Mobile Nashville
1816 Pass Rd. Gulfport, MS 39501
(T)228-864-5050 (F)228-864-7744

PROFESSIONAL SEAL:
ARJUN THOMAS VARGHESE REGISTERED PROFESSIONAL ENGINEER 27208 STATE OF MISSISSIPPI
11/10/17

REVISION	DATE		DRAWN	APPROVED

UNITED STATES AIR FORCE — AIR EDUCATION AND TRAINING COMMAND

KEESLER AIR FORCE BASE
BILOXI — MISSISSIPPI
OFFICE OF CIVIL ENGINEERS

36 AES WAREHOUSE/OFFICE

COMMUNICATIONS PLANS

SUBMITTED: (Chief of Contracts Design) D. KINMAN	RECOMMENDED: (Chief of Engineering) A. MARASCA		FACILITY NUMBER: XX.X
DESIGNED: MAH	CHECKED: ATV	SCALE: AS NOTED	DRAWING NUMBER: E-103
DRAWN: MAH	DATE: 10-04-17	PROJECT NUMBER: MAHG 17-9002	SHEET _____ OF _____

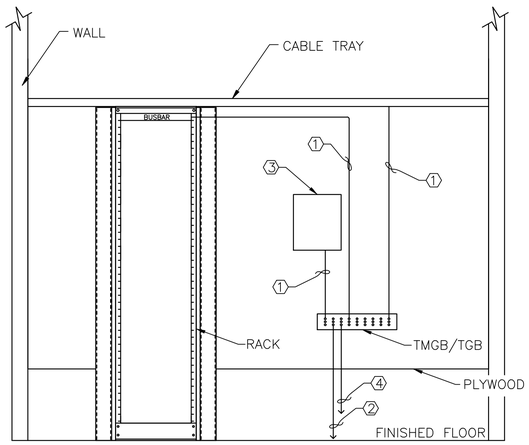

KEYNOTES

1. PROVIDE AND INSTALL #6 GREEN INSULATED GROUNDING CONDUCTOR IN ACCORDANCE WITH SPECIFICATIONS.
2. PROVIDE AND INSTALL #3/0 GROUNDING CONDUCTOR TO MAIN BUILDING GROUND SYSTEM CLOSEST TO ROOM.
3. COPPER MULTI-PAIR PRIMARY PROTECTOR
4. PROVIDE AND INSTALL #3/0 GROUNDING CONDUCTOR BETWEEN TMGB AND BOTH TGB'S IN COMM ROOM 105 AND SIPR ROOM 239.

GENERAL NOTES

1. CONTRACTOR SHALL GROUND ALL METALLIC CONDUIT IN COMMUNICATIONS ROOMS TO THE TMGB OR TGB. TMGB IS LOCATED IN THE MAIN COMMUNICATIONS ROOM 231.
2. IF WELDED STEEL CONSTRUCTION TYPE COMMUNICATIONS RACKS ARE NOT UTILIZED, THEN THE GROUND CONTINUITY MUST BE ENSURED BETWEEN EACH MATING SURFACE OF THE BOLT TOGETHER RACKS.
3. GROUNDING IN COMM ROOM 105 AND SIPR ROOM 239 IS SIMILAR TO MAIN COMM ROOM AND AS SHOWN IN THIS DETAIL.

7 TYPICAL GROUNDING CONNECTIVITY DETAIL
SCALE = NONE THIS DRAWING IS DIAGRAMMATIC

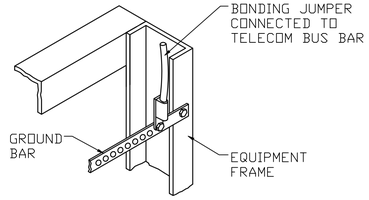

4 2-POST RACK BONDING JUMPER
SCALE = NONE

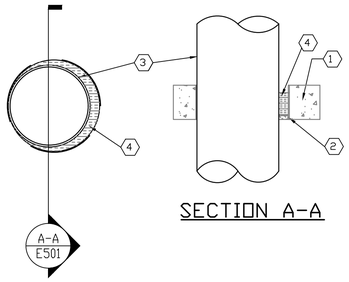

SECTION A-A

1. FLOOR OR WALL ASSEMBLY
2. STEEL SLEEVE SIZE PER MANUFACTURERS SPEC
3. THRU PENETRANT (CONDUIT)
4. FIRE STOPPING – MIN 3 IN. THICKNESS OF PACKING MATERIAL MIN 4 PCF MINERAL WOOL BATT INSULATION FIRMLY PACKED INTO OPENING AS A PERMANENT FORM. PACKING MATERIAL TO BE RECESSED FROM BOTTOM SURFACE OF FLOOR OR FROM BOTH SURFACES OF WALL TO ACCOMMODATE THE REQUIRED THICKNESS OF FILL MATERIAL. B. FILL,VOID OR CAVITY MATERIALS* – CAULK OR SEALANT – MIN 1/2 IN. THICKNESS OF CAULK APPLIED WITHIN THE ANNULUS, FLUSH WITH BOTTOM SURFACE OF FLOOR OR WITH BOTH SURFACES OF WALL. 3M SEALANT.

5 CONDUIT FIRESTOPPING DETAIL
SCALE = NONE

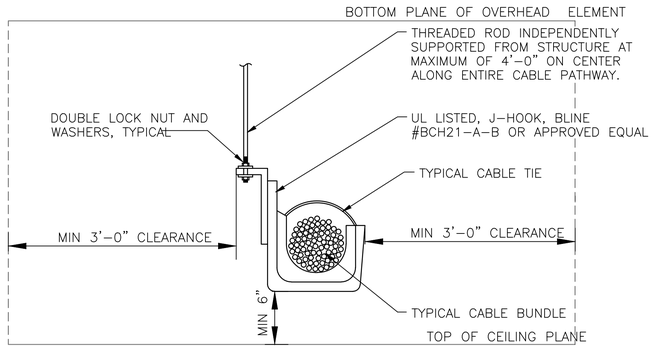

NOTE

J-HOOKS MOUNTED AT MAXIMUM 4'-0" ON CENTER. MINIMUM 6" CLEARANCE FROM J-HOOK TO CEILING APPLIES TO SINGLE AND MULTIPLE TIER J-HOOKS.

1 J-HOOK MOUNTING AND CLEARANCE DETAIL
SCALE = NONE

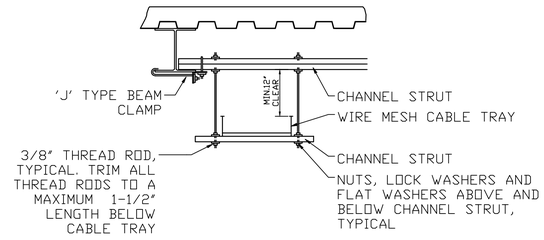

2 CABLE TRAY MOUNTING DETAIL
SCALE = NONE

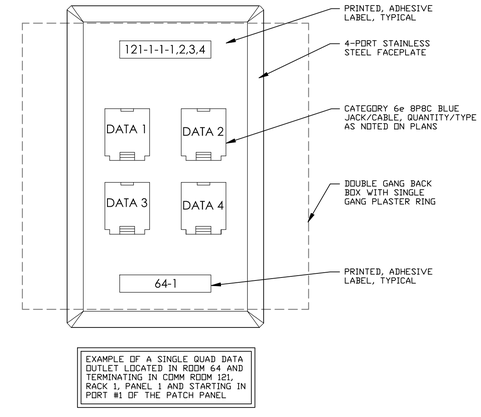

EXAMPLE OF A SINGLE QUAD DATA OUTLET LOCATED IN ROOM 64 AND TERMINATING IN COMM ROOM 121, RACK 1, PANEL 1 AND STARTING IN PORT #1 OF THE PATCH PANEL

8 FACEPLATE 4-PORT FLUSH WALL
SCALE = NONE

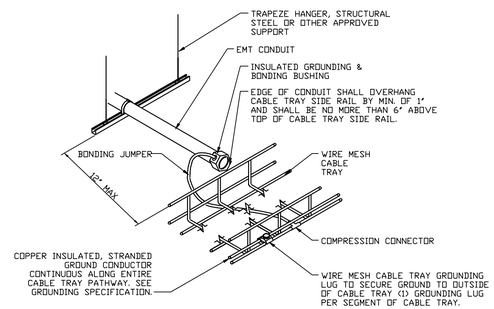

6 CONDUIT TO CABLE TRAY BONDING
SCALE = NONE

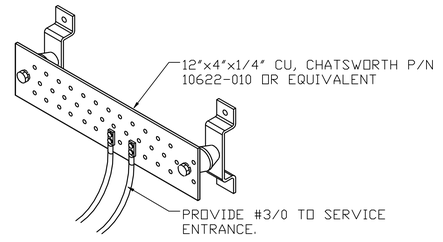

3 TGB GROUNDING BUSBAR
SCALE = NONE

LPK architects
LPK ARCHITECTS, P.A.
2208 18TH ST, SUITE D
GULFPORT, MISSISSIPPI 39501
P.O. BOX 7117
GULFPORT, MISSISSIPPI 39506
P: 228.382.3122
F: 601.693.8640
These documents are the sole property of LPK Architects P.A. and are not to reused. Any alterations, revisions or reuse of these documents without the written consent of LPK Architects will result in all sunties and responsibilities for the entire project becoming null and void.
copyright LPK Architects, P.A.

www.GSEeng.com
GSE CONSULTING ENGINEERS
Gulfport Mobile Nashville
1816 Pass Rd. Gulfport, MS 39501
(T)228-864-5050 (F)228-864-7744

PROFESSIONAL SEAL:
ARJUN THOMAS VARGHESE REGISTERED PROFESSIONAL ENGINEER 27208 STATE OF MISSISSIPPI
11/10/17

REVISION	DATE	DRAWN	APPROVED

UNITED STATES AIR FORCE — AIR EDUCATION AND TRAINING COMMAND

KEESLER AIR FORCE BASE
BILOXI — MISSISSIPPI
OFFICE OF CIVIL ENGINEERS

36 AES WAREHOUSE/OFFICE

COMMUNICATIONS DETAILS

SUBMITTED: (Chief of Contracts Design)		RECOMMENDED: (Chief of Engineering)	FACILITY NUMBER:
D. KINMAN		A. MARASCA	XX.X
DESIGNED: MAH	CHECKED: ATV	SCALE: AS NOTED	DRAWING NUMBER: E-501
DRAWN: MAH	DATE: 10-04-17	PROJECT NUMBER: MAHG 17-9002	SHEET ____ OF ____

208Y/120V PANEL MDP

120/208Y VOLT, 3 PHASE, 4 WIRE, 60HZ, 22,000 AIC — NEMA 1 SURFACE MOUNT

LOCATION	LOAD (WATTS)	CIRCUIT NUMBER		CIRCUIT NUMBER	LOAD (WATTS)	LOCATION
			400 AMP MLO (L1 L2 L3 N G)			
PANEL "P1"	6106	1	100A	2	·	SPARE
	3796	3		4	·	
	5409	5		6	·	
PU-1	4533	7	60A	8	4533	PU-2
	4533	9		10	4533	
	4533	11		12	4533	
DCU-1	750	13	20A	14	180	DFC-1
	750	15		16	180	
WATER HEATER WH-1	1500	17	20A	18	1500	WATER HEATER WH-2
	1500	19		20	1500	
WATER HEATER WH-3	1500	21	20A	22	1500	WATER HEATER WH-4
	1500	23		24	1500	
SPARE	·	25	20A	26	1500	WATER HEATER WH-5
	·	27		28	1500	
SPARE	·	29	20A	30	·	SPARE
SPARE	·	31	20A	32	·	SPARE
SPARE	·	33	20A	34	·	SPARE
SPACE	·	35	20A	36	·	SPACE
SPACE	·	37		38	·	SPACE
SPACE	·	39		40	·	SPACE
SPACE	·	41		42	·	SPACE

TOTAL CONNECTED LOAD: 59.3 kVA — ALL BRANCH BREAKERS SIZED AS SHOWN

PANEL LOCATION: ELECTRICAL ROOM

208Y/120V PANEL P1

120/208Y VOLT, 3 PHASE, 4 WIRE, 60HZ, 22,000 AIC — NEMA 1 SURFACE MOUNT

LOCATION	LOAD (WATTS)	CIRCUIT NUMBER		CIRCUIT NUMBER	LOAD (WATTS)	LOCATION
			100 AMP MLO (L1 L2 L3 N G)			
RECEPT: EXTERIOR	540	1	20A	2	720	RECEPT: WAREHOUSE
RECEPT: WAREHOUSE	360	3	20A	4	360	RECEPT: WAREHOUSE
RECEPT: WAREHOUSE	360	5	20A	6	360	RECEPT: WAREHOUSE
RECEPT: WAREHOUSE	360	7	20A	8	360	RECEPT: WAREHOUSE
RECEPT: WAREHOUSE	360	9	20A	10	360	RECEPT: WAREHOUSE
RECEPT: OFFICE	900	11	20A	12	900	RECEPT: OFFICE
RECEPT: OFFICE, WAREHOUSE	1080	13	20A	14	900	RECEPT: OFFICE
RECEPT: WATER COOLER	180	15	20A	16	360	RECEPT: RESTROOMS
RECEPT: WAREHOUSE, JAN. ELEC.	540	17	20A	18	360	RECEPT: SERVER
RECEPT: SERVER	720	19	20A	20	720	RECEPT: SERVER
RECEPT: SERVER	360	21	20A	22	180	RECEPT: KITCHENETTE
RECEPT: KITCHENETTE	180	23	20A	24	180	RECEPT: KITCHENETTE
RECEPT: KITCHENETTE	180	25	20A	26	526	LIGHTING: ELEC, JAN, R.R., SERVER, OFFICES
LIGHTING: EXTERIOR	250	27	20A	28	1026	LIGHTING WAREHOUSE
LIGHTING: WAREHOUSE	1629	29	20A	30	200	OBSTRUCTION LIGHT ON ROOF
FIRE ALARM CONTROL PANEL (FACP)	600	31	20A	32	540	RECEPT: WAREHOUSE
SPARE	·	33	20A	34	720	RECEPT: WAREHOUSE
RECEPT: WAREHOUSE	720	35	20A	36	720	RECEPT: WAREHOUSE
RECEPT: WAREHOUSE	720	37	20A	38	720	RECEPT: WAREHOUSE
RECEPT: WAREHOUSE	720	39	20A	40	720	RECEPT: WAREHOUSE
RECEPT: WAREHOUSE	360	41	20A	42	720	RECEPT: WAREHOUSE
400 MHZ PLUG	1200	43	30A	44	720	RECEPT: WAREHOUSE
		45	30A	46		SPARE
CEILING RECEPT: WAREHOUSE	720	47	20A	48		SPARE
CEILING RECEPT: WAREHOUSE	720	49	20A	50		SPARE
SPARE		51	20A	52		SPARE
SPARE		53	20A	54		SPARE
SPARE		55	20A	56		SPARE
SPARE		57	20A	58		SPARE
SPARE		59	20A	60		SPARE

TOTAL CONNECTED LOAD: 26.1 kVA — ALL BRANCH BREAKERS SIZED AS SHOWN

PANEL LOCATION: ELECTRICAL ROOM

* ROUTE CIRCUIT THROUGH LIGHTING CONTACTOR AND TIME CLOCK. CONTACTOR AND TIME CLOCK TO BE LOCATED ADJACENT TO SOURCE PANEL.

ELECTRICAL LOAD ANALYSIS:

LOAD TYPE	CONNECTED LOAD	DIVERSITY FACTOR	DIVERSIFIED LOAD
RECEPTACLES (=<10kVA)	10.0KW	100%	10.0KW
RECEPTACLES (>10kVA)	1.8KW	50%	.9KW
LIGHTING	3.4KW	125%	4.2KW
MISC. EQUIPMENT	15KW	100%	15KW
HVAC EQUIPMENT	27.1KW	100%	27.1KW
TOTAL:			57.2KW

57.2 KW = 158A @ 208V.

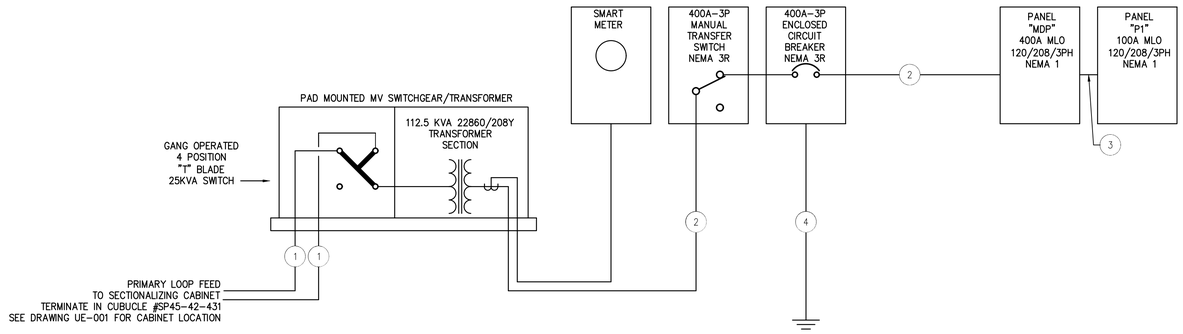

AVAILABLE FAULT CURRENT CALCULATION BASED ON SECONDARY FAULT TABLE IS 23,131 AMPS. CONTRACTOR SHALL OBTAIN ACTUAL FAULT CURRENT FROM LOCAL UTILITY POWER SITE ENGINEER AND PROVIDE A LABEL IN ACCORDANCE WITH NEC ARTICLE 110.24. CONTRACTOR SHALL ALSO BE RESPONSIBLE FOR FURNISHING AND INSTALLING EQUIPMENT WITH HIGHER AIC RATINGS IF THE FAULT CURRENT VALUES OBTAINED FROM LOCAL UTILITY ARE HIGHER THAN WHAT IS INDICATED ON THE DRAWINGS.

PER NEC ARTICLE 250 SECTION III 250.50 ALL GROUNDING ELECTRODES AS DESCRIBED IN 250.52(A)(1) THROUGH (A)(6) THAT ARE AT EACH BUILDING OR STRUCTUR SERVED SHALL BE BONDED TOGETHER TO FORM THE GROUNDING ELECTRODE SYSTEM. WHERE NONE OF THESE GROUNDING ELECTRODES EXIST, ONE OR MORE OF THE GROUNDING ELECTRODES SPECIFIED IN 250.52(A)(4) THROUGH (A)(7) SHALL BE INSTALLED AND USED.

1 RISER DIAGRAM
SCALE: NONE

CABLE LEGEND:

1. 3 25KV #1/0 CU W/SHLD, & 1 #6 CU GND. 4" C.
2. 4 #600MCM & 1 #1/0 CU GND. 4" C.
3. 4 #3 & 1 #8 CU GND. 2" C.
4. #1/0 CU GROUNDING ELECTRODE CONDUCTOR

MEDIUM VOLTAGE NOTES:

1. ALL NEW PRIMARY CABLE INSTALLATIONS SHALL BE TESTED AND PASS A HIGH POTENTIAL LEAKAGE TEST PRIOR TO ENERGIZATION. TEST VOLTAGE FOR HIGH POTENTIAL TESTING IS 75KV. DC HIGH POTENTIAL TEST SHALL BE PERFORMED IN ACCORDANCE WITH NETA ATS, 1995. CABLE SECTIONS SHALL BE TESTED SEPARATELY AND A CABLE SECTION SHALL BE DEFINED FROM ONE TERMINATION DEVICE TO ANOTHER TERMINATION DEVICE ON THE OPPOSITE END. MAXIMUM NUMBER OF TERMINATION DEVICES PER CABLE SECTION IS TWO (2). PROVIDE GRAPHIC PLOTS FOR LEAKAGE CURRENT VERSUS TIME AND LEAKAGE CURRENT VERSUS STEP VOLTAGE ON SEPARATE SHEETS.

2. KEESLER PRIMARY ELECTRICAL SYSTEMS SHALL BE DESIGNED FOR 25KV CLASS SOLIDLY GROUNDED DISTRIBUTION SYSTEM. KEESLER PRIMARY VOLTAGE IS 22860GNDY/13,200 V. PRIMARY CABLE STANDARDS: #1/0, #4/0, AND 500 MCM. COPPER CONDUCTOR, 345 MIL ETHYLENE PROPYLENE RUBBER (EPR) INSULATION, COPPER CONCENTRIC NEUTRAL (1/3 OR FULL) FOR PROJECTS REQUIRING 1000LF OR MORE. TAPE SHIELDED CABLE MAY BE USED FOR PROJECTS REQUIRING LESS THAN 1000LF OF PRIMARY CONDUCTOR. . NOTE: WHEN UTILIZING THE TAPE SHIELDED CABLE A LOW VOLTAGE NEUTRAL CONDUCTOR IS REQUIRED. TAPE SHIELDS SHALL BE BONDED TO GROUNDING SYSTEM ONLY.

3. PROVIDE A GROUND RING AROUND THE TRANSFORMER WITH 4/0 AWG BARE COPPER. PROVIDE FOUR GROUND RODS IN THE GROUND RING, ONE PER CORNER. PROVIDE TWO GROUND RODS IN THE GROUND RING AT OPPOSITE CORNERS. PROVIDE ONE GROUND ROD IN THE GROUND RING WITH THE GROUND ROD LOCATED IN THE TRANSFORMER CABINET. INSTALL THE GROUND RODS AT LEAST 3000 MM 10 FEET APART FROM EACH OTHER. PROVIDE SEPARATE COPPER GROUNDING CONDUCTORS AND CONNECT THEM TO THE GROUND LOOP AS INDICATED. WHEN WORK IN ADDITION TO THAT INDICATED OR SPECIFIED IS REQUIRED TO OBTAIN THE SPECIFIED GROUND RESISTANCE, THE PROVISION OF THE CONTRACT COVERING "CHANGES" APPLIES.

4. SINGLE AND THREE PHASE TRANSFORMER MOUNTED GANG OPERATED LOOP FEED SWITCH SHALL BE THE 4-POSITION "T" BLADE TYPE. LABEL SWITCH POSITIONS AS FOLLOWS: "A+B+T" @TOP, "B+T" @RIGHT, "A+T" @BOTTOM, "A+B" @LEFT. OR 3 SWITCHES IN TRANSFORMER (A ON-OFF, B ON-OFF, AND TRX ON-OFF)

5. PROVIDE SINGLE PHASE FAULT INDICATORS ON ALL NEW CABLES ENTERING AND EXITING ANY ENCLOSURE (E.G. TRANSFORMER, SWITCH, SECTIONALIZING PEDESTAL) INCLUDING EXISTING ENCLOSURES USED AS TIE POINT. THREE PHASE FAULT INDICATORS ARE NOT ACCEPTABLE.

6. LIGHTING PROTECTION WILL BE INSTALLED ON ALL END OF THE LINE EQUIPMENT. UNLESS NOTES TO BE INSTALLED IN THE SYSTEMS EQUIPMENT

7. PROVIDE A PARKING STAND NEAR EACH BUSHING. PROVIDE INSULATED STANDOFF BUSHINGS FOR PARKING OF ENERGIZED HIGH-VOLTAGE CONNECTORS ON PARKING STANDS.

8. PROVIDE INSULATED PROTECTIVE CAPS (NOT SHIPPING CAPS) FOR INSULATING AND SEALING OUT MOISTURE FROM UNUSED BUSHINGS TO INCLUDE PARKING STANDS.

10. PROVIDE TRANSFORMER, TAN COLOR, AND ADDITIONAL REQUIREMENTS PER UFC 3-550-01.

LPK architects

LPK ARCHITECTS, P.A.
2208 18TH ST, SUITE D
GULFPORT, MISSISSIPPI 39501
P.O. BOX 7117
GULFPORT, MISSISSIPPI 39506
P: 228.382.3122
F: 601.693.8640

These documents are the sole property of LPK Architects P.A. and are not to reused. Any alterations, revisions or reuse of these documents without the written consent of LPK Architects will result in all sunrites and responsibilities for the entire project becoming null and void.

copyright LPK Architects, P.A.

www.GSEeng.com
GSE CONSULTING ENGINEERS
Gulfport Mobile Nashville
1816 Pass Rd. Gulfport, MS 39501
(T)228-864-5050 (F)228-864-7744

PROFESSIONAL SEAL:

ARJUN THOMAS VARGHESE — REGISTERED PROFESSIONAL ENGINEER — 27208 — STATE OF MISSISSIPPI

11/10/17

REVISION	DATE	DRAWN	APPROVED

UNITED STATES AIR FORCE — AIR EDUCATION AND TRAINING COMMAND

KEESLER AIR FORCE BASE
BILOXI — MISSISSIPPI
OFFICE OF CIVIL ENGINEERS

36 AES WAREHOUSE/OFFICE
PANEL SCHEDULES

SUBMITTED: (Chief of Contracts Design)	RECOMMENDED: (Chief of Engineering)	FACILITY NUMBER:
A.KINMAN	A.MARASCA	XXX
DESIGNED: ATV	CHECKED:	SCALE:
DRAWN: MAH	DATE: 10-04-17	PROJECT NUMBER: MAHG 17-9002
		DRAWING NUMBER: E201
		SHEET ____ OF ____

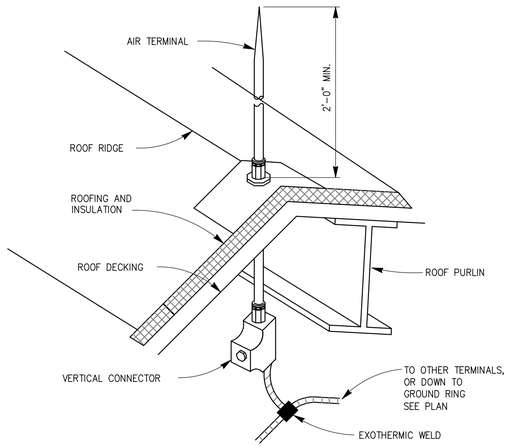

1 E701 **AIR TERMINAL**
SCALE: NONE

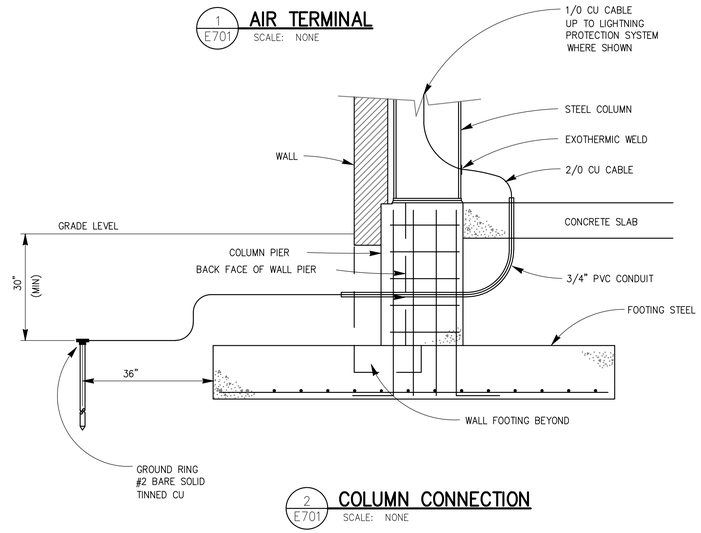

2 E701 **COLUMN CONNECTION**
SCALE: NONE

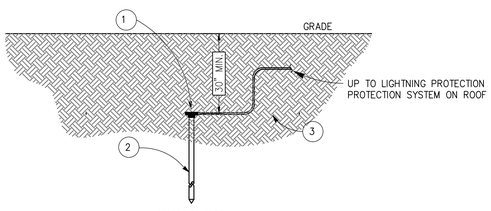

MATERIAL LIST

1. GROUND ROD 3/4" x 20'-0"
2. CADWELD TYPE "T" CONNECTION
3. GROUNDING CONDUCTOR #2 BARE SOLID TINNED CU

NOTE: TOP OF GROUND ROD TO BE AT 30"

3 E701 **GROUNDING ROD INSTALLATION**
SCALE: NONE

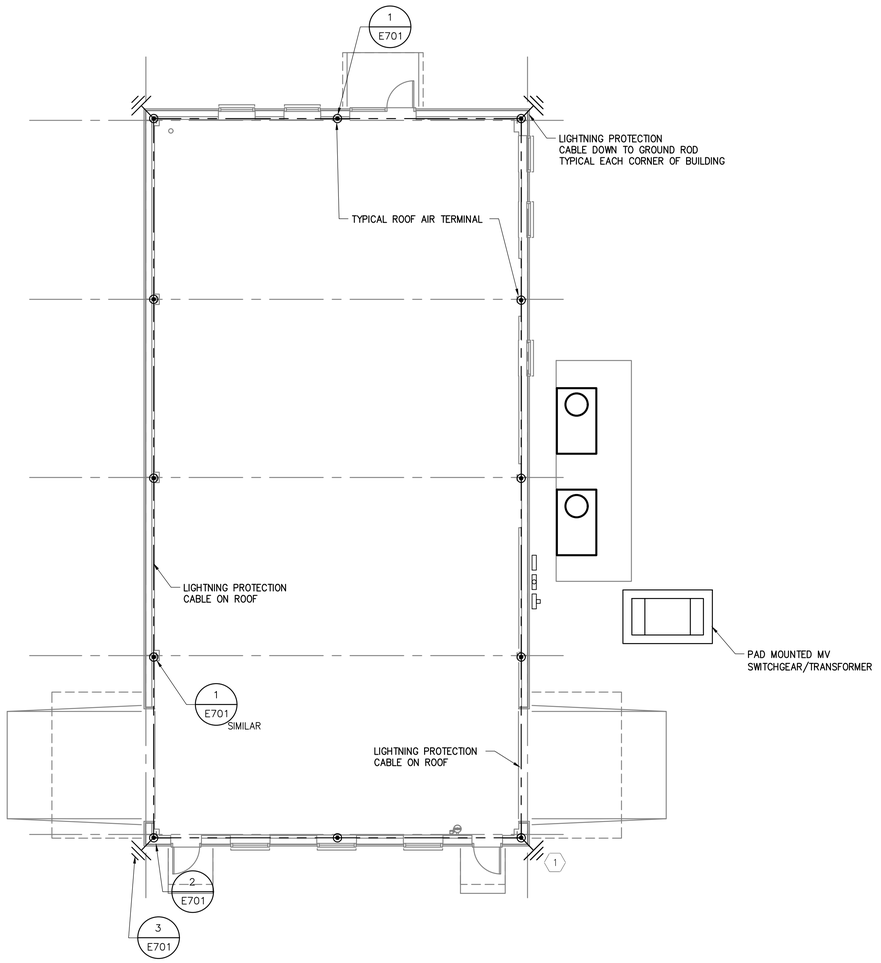

1 **LIGHTNING PROTECTION PLAN**
SCALE: 1/8" = 1'-0"

KEYED NOTES:

1. BOND TRANSFORMER PAD 4/0 BARE CU GROUNDING CONDUCTOR TO LIGHTING PROTECTION GROUND ROD AT THIS LOCATION. SEE E-101.

NOTES FOR ALL AREAS:

1. ALL MATERIALS TO BE UNDERWRITERS LABORATORIES LISTED AND LABELED. LABELS TO BE ON ALL AIR TERMINALS AND AT 3 METER INTERVALS ON CONDUCTOR CABLE.
2. TAKE CARE TO ENSURE THAT ALL AIR TERMINALS ARE WITHIN 0.6 METERS OF OUTSIDE BUILDING EDGE, OUTSIDE CORNER, AND RIDGE ENDS. ENSURE AIR TERMINAL PROJECTS 0.25 METERS ABOVE OBJECT PROTECTED AND THAT SPACING DOES NOT EXCEED 6 METERS.
3. MAINTAIN DOWNWARD OR HORIZONTAL COURSING OF MAIN CONDUCTOR CABLE AND ENSURE THAT ALL BENDS HAVE AT LEAST AN 8" RADIUS AND ARE LESS THAN 90°.
4. SUPPORT ALL EXPOSED CONDUCTOR CABLE AT 36" ON CENTER MAXIMUM. VERIFY COMPATIBILTY OF ADHESIVE ON ROOF TYPE.
5. ACTUAL JOBSITE CONDITIONS MAY ALTER SOME AIR TERMINAL AND GROUNDING LOCATIONS.
6. GROUND ELECTRODES SHALL PENETRATE EARTH AT LEAST 10 FEET.
7. AS-BUILT DRAWINGS SHALL BE SUBMITTED IN ACCORDANCE WITH CERTIFICATION PROCEDURES.
8. DRAWINGS INDICATE MINIMUM REQUIREMENTS. FINAL DESIGN SHALL BE BY CERTIFIED LIGHTNING PROTECTION INSTALLER. INSTALLATION SHALL COMPLY WITH ALL ASPECTS NFPA 780. INSTALLATION SHALL BE A COMPLETE LIGHTNING PROTECTION SYSTEM SUCH THAT THE ENTIRE SYSTEM MEETS THE MASTER LABEL REQUIREMENTS. A UL MASTER LABEL CERTIFICATION SHALL BE PROVIDED FOR THE ENTIRE LIGHTNING PROTECTION SYSTEM, ALONG WITH A UL LIGHTNING PROTECTION INSPECTION CERTIFICATE CERTIFIED TO UL 96A.
9. INSTALLATION SHALL BE COMPLIANT WITH NFPA 780.

LPK architects

LPK ARCHITECTS, P.A.
2208 18TH ST, SUITE D
GULFPORT, MISSISSIPPI 39501
P.O. BOX 7117
GULFPORT, MISSISSIPPI 39506
P: 228.382.3122
F: 601.693.8640
These documents are the sole property of LPK Architects P.A. and are not to reused. Any alterations, revisions or reuse of these documents without the written consent of LPK Architects will result in all sureties and responsibilities for the entire project becoming null and void.
copyright LPK Architects, P.A.

www.GSEeng.com
GSE CONSULTING ENGINEERS
Gulfport Mobile Nashville
1816 Pass Rd. Gulfport, MS 39501
(T)228-864-5050 (F)228-864-7744

PROFESSIONAL SEAL:
ARVIN THOMAS VARNESE REGISTERED PROFESSIONAL ENGINEER 27208 STATE OF MISSISSIPPI
11/10/17

REVISION	DATE	DRAWN	APPROVED

UNITED STATES AIR FORCE — AIR EDUCATION AND TRAINING COMMAND

KEESLER AIR FORCE BASE
BILOXI — MISSISSIPPI

OFFICE OF CIVIL ENGINEERS

36 AES WAREHOUSE/OFFICE

LIGHTNING PROTECTION PLAN

SUBMITTED: (Chief of Contracts Design)	RECOMMENDED: (Chief of Engineering)	FACILITY NUMBER:
D. KINMAN	A. MARASCA	XX.X
DESIGNED: MAH	CHECKED: ATV	SCALE: AS NOTED	DRAWING NUMBER: E-701
DRAWN: MAH	DATE: 10-04-17	PROJECT NUMBER: MAHG 17-9002	SHEET ____ OF ____

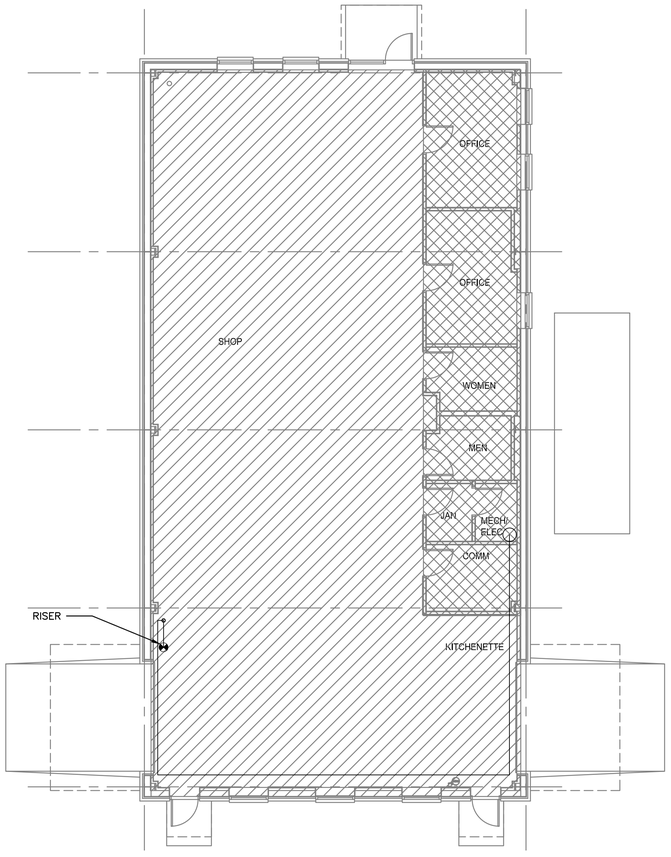

1 HAZARD PLAN
SCALE: 1/8" = 1'-0"

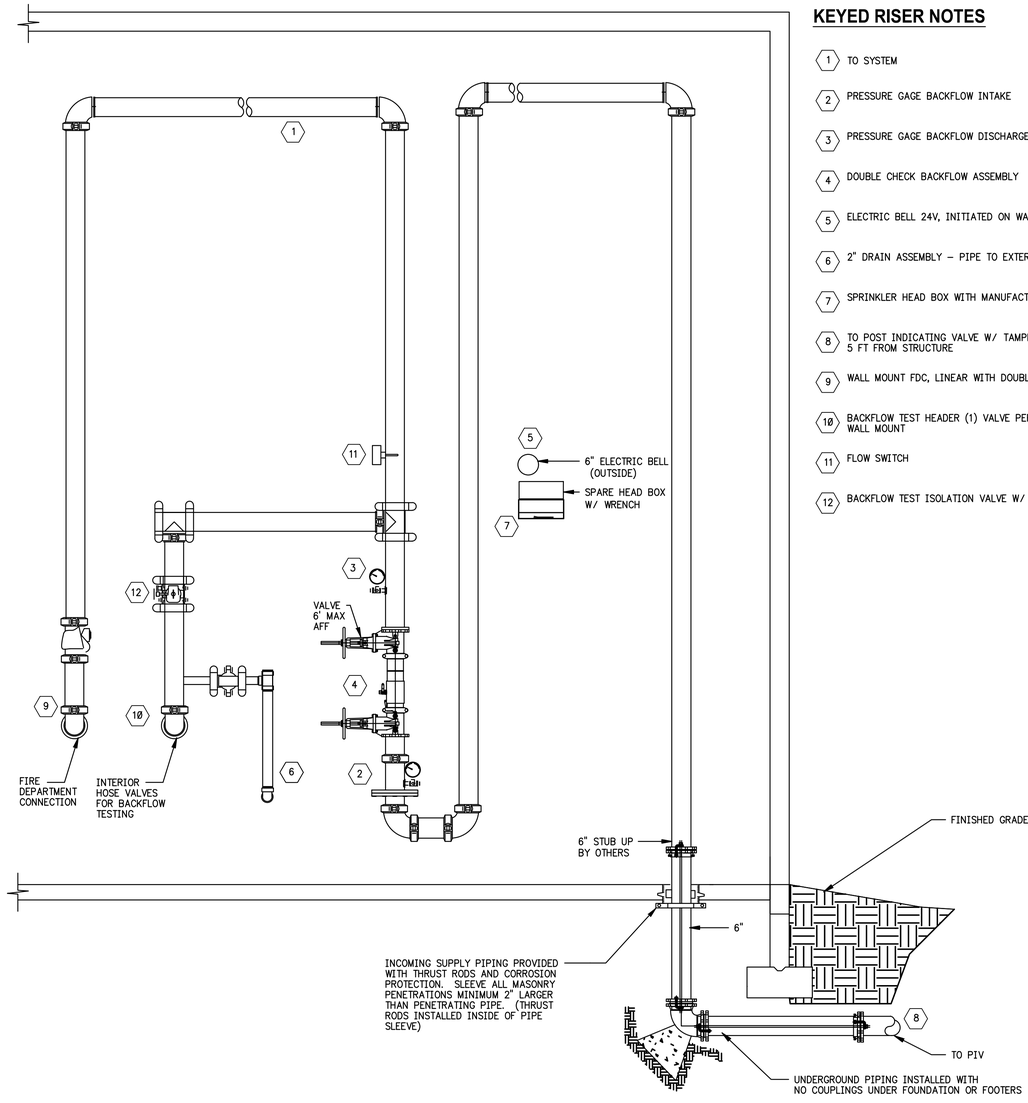

2 RISER DIAGRAM
SCALE: NOT TO SCALE

KEYED RISER NOTES

1. TO SYSTEM
2. PRESSURE GAGE BACKFLOW INTAKE
3. PRESSURE GAGE BACKFLOW DISCHARGE
4. DOUBLE CHECK BACKFLOW ASSEMBLY
5. ELECTRIC BELL 24V, INITIATED ON WATER FLOW BY FACP
6. 2" DRAIN ASSEMBLY – PIPE TO EXTERIOR, DISCHARGE WITHIN 1' OF GRADE
7. SPRINKLER HEAD BOX WITH MANUFACTURER'S WRENCH
8. TO POST INDICATING VALVE W/ TAMPER, LOCATED BUILDING HEIGHT PLUS 5 FT FROM STRUCTURE
9. WALL MOUNT FDC, LINEAR WITH DOUBLE CLAPPER BRASS
10. BACKFLOW TEST HEADER (1) VALVE PER 250 GPM SYSTEM DEMAND, LINEAR WALL MOUNT
11. FLOW SWITCH
12. BACKFLOW TEST ISOLATION VALVE W/ TAMPER, NORMALLY CLOSED

HAZARD PLAN SYMBOLS

STORAGE, INCL. SPACE ABOVE OFFICES:
0.2 GPM/2,000 SF
8.0K GLASS BULB UPRIGHT BRASS IN EXPOSED AREAS, CHROME PENDANT IN FINISHED CEILINGS. BRASS HIGH TEMPERATURE HEADS, CHROME ORDINARY TEMPERATURE HEADS

OFFICES:
SPRINKLERS BELOW CEILING
5.6K ORDINARY TEMPERATURE

DESIGN CRITERIA – STORAGE:
UFC 3-600-01, CHANGE 1, 28 NOV 2016
4-42.2.3.1 CLASS IV COMMODITY, NONENCAPSULATED
TO MAXIMIZE POTENTIAL STORAGE HEIGHT

EAVE HEIGHT	16'-0"
SPRINKLER CLEARANCE	1'-0"
STORAGE CLEARANCE	1'-6"
STORAGE HEIGHT	13'-6"

NFPA 13-2016
14.2.1(1) NONENCAPSULATED TO 30 FT
F14.2.4.2 = 0.29 GPM/SF OVER 2,000 SF
F14.2.4.3 = 60% REDUCTION FOR 13'-6" HEIGHT
= 0.174 GPM/SF OVER 2,000 SF, MIN. REQ'D = 0.2 GPM/SF
T12.8.6 = HOSE STREAM 500 GPM
T12.6.2 = MIN. K FACTOR 8.0, 286°F, GLASS BULB, BRASS UPRIGHT
T8.6.2.2.1(d) = MAX. SPACING 15' & 130 SF

DESIGN CRITERIA – OFFICES:
UFC 3-600-01, CHANGE 1, 28 NOV 2016

T9-3 = LIGHT HAZARD 0.1 GPM/1,500 SF
T9-4 = HOSE STREAM 250 GPM

NFPA 13 – 2016
T8.6.2.21(2) = MAX. SPACING 15 FT & 225 SF
MIN. K FACTOR 5.6, ORDINARY TEMPERATURE

LPK architects
LPK ARCHITECTS, P.A.
2208 18TH ST, SUITE D
GULFPORT, MISSISSIPPI 39501
P.O. BOX 7117
GULFPORT, MISSISSIPPI 39506
P: 228.382.3122
F: 601.693.8640
These documents are the sole property of LPK Architects P.A. and are not to reused. Any alterations, revisions or reuse of these documents without the written consent of LPK Architects will result in all sureties and responsibilities for the entire project becoming null and void.
copyright LPK Architects, P.A.

www.GSEeng.com
GSE CONSULTING ENGINEERS
Gulfport Mobile Nashville
1816 Pass Rd. Gulfport, MS 39501
(T)228-864-5050 (F)228-864-7744

PROFESSIONAL SEAL:
JOHN T. WADE REGISTERED PROFESSIONAL ENGINEER 14461 STATE OF MISSISSIPPI
11/10/17

REVISION	DATE		DRAWN	APPROVED

UNITED STATES AIR FORCE
AIR EDUCATION AND TRAINING COMMAND
KEESLER AIR FORCE BASE
BILOXI – MISSISSIPPI
OFFICE OF CIVIL ENGINEERS

36 AES WAREHOUSE/OFFICE

HAZARD PLAN

SUBMITTED: (Chief of Contracts Design) D. KINMAN		RECOMMENDED: (Chief of Engineering) A. MARASCA	FACILITY NUMBER: XX.X
DESIGNED: BDD	CHECKED: JTW	SCALE: AS NOTED	DRAWING NUMBER: FX-101
DRAWN: JJH	DATE: 10-04-17	PROJECT NUMBER: MAHG 17-9002	SHEET 1 OF 1

SPRINKLER NOTES

1. PROVIDE A WET PIPE SYSTEM IN THE AREAS AS INDICATED ON THE DRAWINGS IN FULL COMPLIANCE WITH THE STANDARDS AND CODES REFERENCED IN THE SPECIFICATIONS TO INCLUDE NFPA 13 – 2016 AND UFC 3-600-01, CHANGE 1, 28 NOV 2016.
2. CONTRACTOR IS RESPONSIBLE FOR FIELD VERIFYING ALL INFORMATION TO INCLUDE ZONES.
3. SPRINKLER CONTRACTOR TO HAVE A SPRINKLER CONTRACTORS LICENSE ISSUED BY THE STATE OF MISSISSIPPI FOR A MINIMUM OF 5 YEARS.
4. PROVIDE SHOP DRAWINGS AND HYDRAULIC CALCULATIONS WITH CUT SHEETS FOR ENGINEER'S REVIEW PRIOR TO SUBMITTING TO THE GOVERNMENT. SHOP DRAWINGS SHALL BE ORIGINAL PDF PLOTS. SCANNED SHOP DRAWINGS AND PLOTS WITH DISTORTED SCALES WILL NOT BE ACCEPTED.
5. SUBMITTAL PACKAGE AND WORK TO BE SUPERVISED BY A TECHNICIAN WITH A MINIMUM OF A NICET LEVEL III IN WATER BASED SYSTEMS. SUBMIT DOCUMENTATION WITH SHOP DRAWINGS.
6. SYSTEM SHOWN IS FOR BIDDING PURPOSES AND TO REFLECT MINIMUM REQUIREMENTS. CONTRACTOR MAY ADJUST PIPE BASED ON HYDRAULICS.
7. ALL GROOVED FITTINGS AND COUPLINGS TO BE SAME MANUFACTURER.
8. ALL ABOVEGROUND PIPE 2" AND SMALLER TO BE THREADED, BLACK STEEL SCHEDULE 40.
9. ALL ABOVEGROUND PIPE 2 1/2" AND LARGER TO BE ROLL GROOVE/ WELDED, BLACK STEEL MINIMUM SCHEDULE 10.
10. PROVIDE INSPECTOR'S TEST WITH SIGHT GLASS AND DISCHARGE TO THE EXTERIOR IN REMOTE AREA. VALVE TO BE W/IN 6 FT. AFF.
11. MECHANICAL TEES AND FLEXIBLE PIPING OR DROPS ARE NOT PERMITTED.
12. PROVIDE BACKFLOW TEST CONNECTIONS ON THE SPRINKLER RISER. PROVIDE ONE HOSE CONNECTION FOR EACH 250 GPM OF SPRINKLER DEMAND. PROVIDE BACKFLOW TEST AT FINAL AT SYSTEM DEMAND.
13. FOR CEILINGS, PROVIDE SEMI RECESSED PENDENT SPRINKLERS AND ESCUTCHEONS WITH A CHROME FINISH AND GLASS BULBS. CENTER TILE IS REQUIRED.
14. FOR EXPOSED STRUCTURE, PROVIDE BRASS UPRIGHTS WITH GLASS BULBS.
15. PAINT ALL PIPE RED AND BAND IN ACCORDANCE WITH UFC 3-600-01..
16. HANGERS SHALL BE SPACED AND PLACED IN ACCORDANCE WITH NFPA-13. SEISMIC BRACING IS NOT REQUIRED.
17. ROUTE ALL DRAINS AND TEST CONNECTIONS TO THE EXTERIOR, DISCHARGE WITHIN 1FOOT OF FINISHED GRADE, PROVIDE SPLASH PADS. DO NOT DISCHARGE ON WALKWAYS.
18. COORDINATE WITH OTHER TRADES TO MAINTAIN REQUIRED CLEARANCES TO OTHER EQUIPMENT.
19. CONTRACTOR TO FIELD VERIFY ALL CONDITIONS.
20. CONTRACTOR TO COORDINATE ALL TIE INS WITH OWNER.
21. PROVIDE PRELIMINARY AND FINAL TESTING OF ALL NEW DEVICES INSTALLED. FINAL TESTING TO BE WITNESSED BY THE GOVERNMENT.
22. CONTRACTOR TO CLEAN JOB SITE DAILY AND REMOVE AND DISPOSE OF ALL WASTE GENERATED.
23. PROTECT ALL AREAS, EQUIPMENT AND FURNISHINGS.
24. MAXIMUM VELOCITY IN CALCULATIONS IS 20 FPS.

Sprinkler Head Schedule					
Symbol	Count	Thread	K-Factor	Description	Note
⊙	40	1/2"	8.0	HEAD1	15' AFF
⊗	9	1/2"	5.6	HEAD4	CLG HT.
49 = Total Number of Heads This Project					

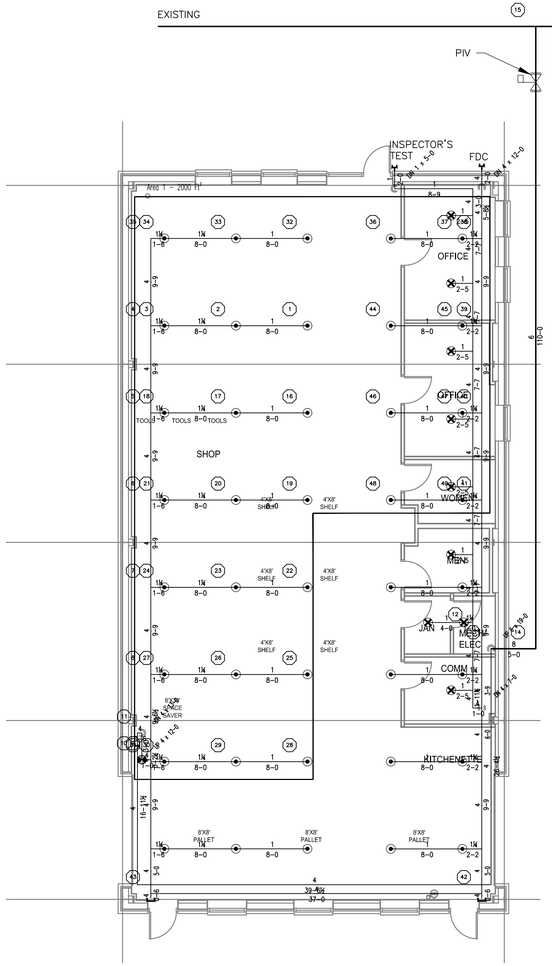

1 SPRINKLER PLAN
SCALE: 1/8" = 1'-0"

NOTE:
CONTRACTOR MAY REUSE EXISTING MAIN SHOWN ON OWNER'S AS-BUILTS, WORK INCLUDES FULL COMPLIANCE, MINIMUM OF 6 INCH LEAD IN FROM BUILDING STUB-UP TO NORTH SIDE OF HANGAR ROAD, EITHER NEW OR MODIFY EXISTING.

LPK architects

LPK ARCHITECTS, P.A.
2208 16TH ST, SUITE D
GULFPORT, MISSISSIPPI 39501
P.O. BOX 1
GULFPORT, MISSISSIPPI 39506
P: 228.382.3122
F: 601.893.8640

These documents are the sole property of LPK Architects P.A. and are not to reused. Any alterations, revisions or reuse of these documents without the written consent of LPK Architects will result in all liabilities and responsibilities for the entire project becoming null and void.
copyright LPK Architects, P.A.

www.GSEeng.com
GSE
CONSULTING ENGINEERS
Gulfport Mobile Nashville
1816 Pass Rd. Gulfport, MS 39501
(T)228-864-5050 (F)228-864-7744

PROFESSIONAL SEAL:
JOHN T. WADE REGISTERED PROFESSIONAL ENGINEER 14487 STATE OF MISSISSIPPI
11/10/17

REVISION	DATE		DRAWN	APPROVED

UNITED STATES AIR FORCE — AIR EDUCATION AND TRAINING COMMAND

KEESLER AIR FORCE BASE
BILOXI — MISSISSIPPI

OFFICE OF CIVIL ENGINEERS

36 AES WAREHOUSE/OFFICE

SPRINKLER PLAN

SUBMITTED: (Chief of Contracts Design)		RECOMMENDED: (Chief of Engineering)	FACILITY NUMBER:
D. KINMAN		A. MARASCA	XX.X
DESIGNED: BDD	CHECKED: JTW	SCALE: AS NOTED	DRAWING NUMBER: FX-111
DRAWN: JJH	DATE: 10-04-17	PROJECT NUMBER: MAHG 17-9002	SHEET 1 OF 1

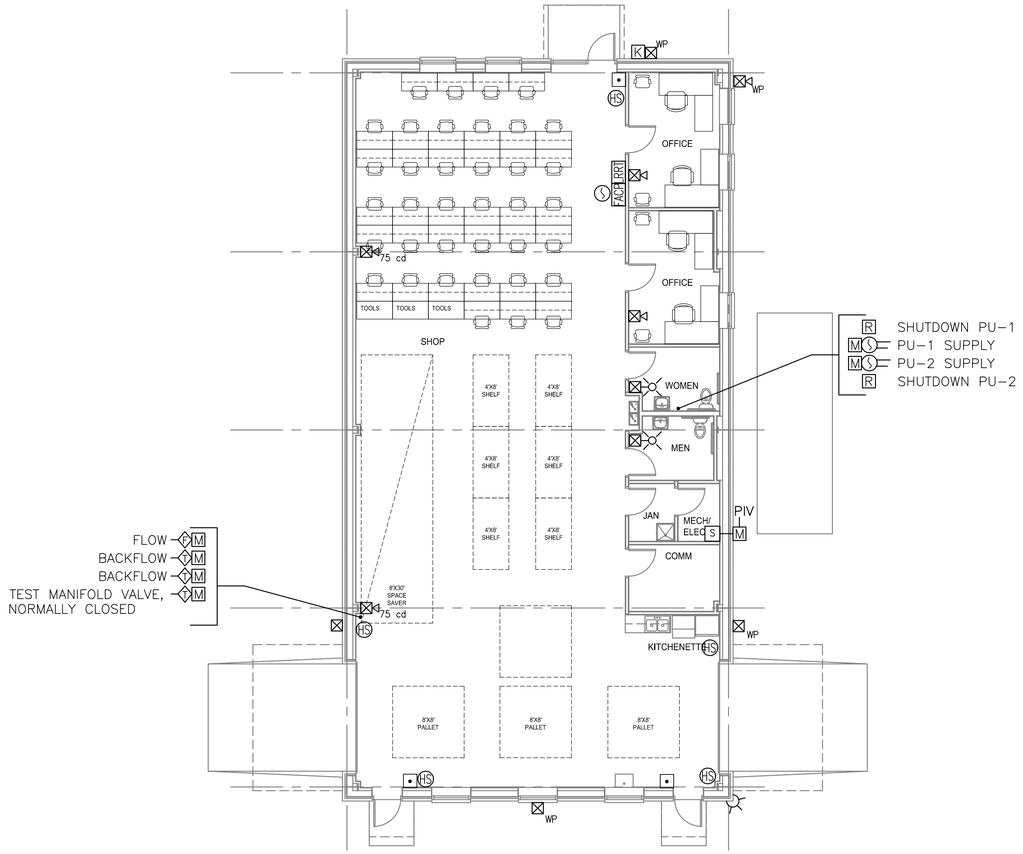

1 FIRE ALARM PLAN
SCALE: 1/8" = 1'-0"

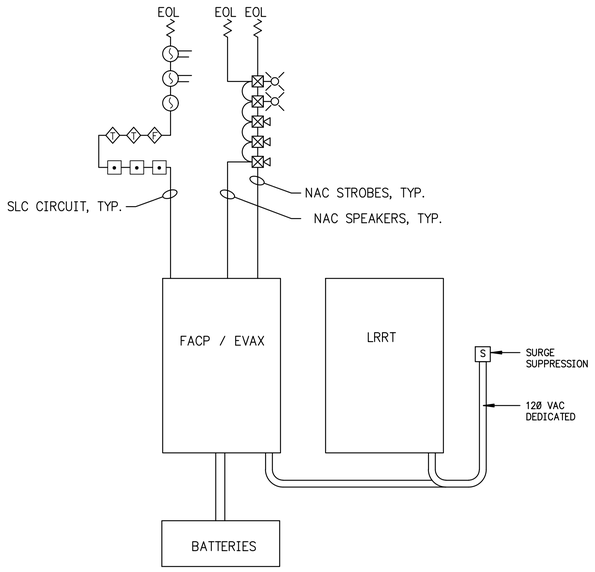

2 FIRE ALARM RISER DIAGRAM
SCALE: NOT TO SCALE

FIRE ALARM SYMBOLS

RRT	LONG RANGE RADIO TRANSMITTER	M	MONITORING MODULE
FACP	FIRE ALARM/EVAX CONTROL PANEL	S	SURGE PROTECTION
K	KNOX BOX		ANTENNA
	SPEAKER CLEAR/AMBER STROBE 15cd U.N.O.		MANUAL PULL STATION
	STROBE CLEAR/AMBER STROBE 15cd U.N.O.	HS	HVAC SHUTDOWN SWITCH BY MECHANICAL
	EXTERIOR WEATHERPROOF SPEAKER	R	SHUTDOWN
S	PHOTO ELECTRIC SMOKE DETECTOR		
S	DUCT DETECTOR BY MECHANICAL		
F	WET FLOW SWITCH W/ MON. MODULE		
T	TAMPER W/ MON. MODULE		

NOTE: WP DENOTES WEATHERPROOF DEVICE

INPUT	OUTPUT: LOCAL OUTPUT									OUTPUT: SIGNAL OUTPUT TO NAS								
	DISPLAY ADDRESS MESSAGE ON THE MAIN FACP AND ANNUNCIATORS	RECORD THE EVENT IN THE HISTORY LOG	ACTIVATE FIRE STROBES THROUGHOUT BUILDING	BROADCAST MESSAGE ON ALL SPEAKERS	ACTIVATE EXTERIOR WATER FLOW BELL	ACTIVATE AMBER STROBES	STOP AIR HANDLING UNITS	OVERRIDE FIRE ALARM STROBE & MESSAGE	RESTORE FIRE ALARM NOTIFICATION STATUS	TRANSMIT WATER FLOW ALARM	TRANSMIT MANUAL PULL STATION ALARM SIGNAL	TRANSMIT SMOKE DETECTOR ALARM SIGNAL	TRANSMIT DUCT DETECTOR SUPERVISORY SIGNAL	TRANSMIT SLEEPING ROOM DETECTOR SUPERVISORY SIGNAL	TRANSMIT MNS ACTIVATION	TRANSMIT SUPERVISORY SIGNAL	TRANSMIT FACP/FCPS TROUBLE SIGNAL
MANUAL PULL STATION	●	●	●	●							●							
SPRINKLER WATER FLOW	●	●	●	●	●					●								
FACP SMOKE DETECTOR	●	●	●	●								●						
DUCT DETECTOR	●	●					●						●					
VALVE POSITION MONITOR SWITCH	●	●														●		
FACP OR FCPS TROUBLE SIGNAL	●	●																●
MNS MESSAGE ACTIVATION	●	●		●		●		●							●			
MNS MICROPHONE ACTIVATION	●	●		●		●		●							●			
MNS ACTIVATION TERMINATED			●						●									

FIRE ALARM NOTES

1. CONTRACTOR SHALL PROVIDE A NEW ADDRESSABLE SUPERVISING STATION MANUAL FIRE ALARM AND MASS NOTIFICATION SYSTEM TO INCLUDE SUPERVISION OF TAMPER(S) AND FLOW SWITCH.
2. THESE DRAWINGS DEPICT GENERAL LOCATIONS OF LIFE SAFETY EQUIPMENT & FIELD DEVICES. EXACT ROUTING OF CONDUITS IS TO BE DETERMINED IN THE FIELD BY THE INSTALLING CONTRACTOR. ALL CHANGES SHALL BE CLEARLY INDICATED ON THE RECORD DRAWINGS.
3. SHOULD ANY CONDITIONS EXIST THAT DIFFER FROM WHAT IS INDICATED ON THESE DRAWINGS WHICH CAUSE MAJOR DEVIATIONS IN THE WORK SHOWN, THE CONTRACTOR SHALL CONTACT THE FIRE PROTECTION ENGINEER IN A TIMELY MANNER SO AS NOT TO IMPAIR THE CONSTRUCTION SCHEDULE.
4. CONTRACTOR IS RESPONSIBLE FOR MAKING AND OBTAINING APPROVAL FOR ALL NECESSARY ADJUSTMENTS IN CIRCUITING AS REQUIRED TO ACCOMMODATE THE RELOCATION OF EQUIPMENT AND/OR DEVICES WHICH ARE AFFECTED BY ANY AUTHORIZED CHANGE.
5. A STAMPED SET OF APPROVED FIRE ALARM DRAWINGS SHALL BE AT THE JOB SITE AND SHALL BE USED FOR INSTALLATION.
6. THE POWER CIRCUIT TO THE FIRE ALARM POWER SUPPLIES SHALL BE ON A DEDICATED 120V, 20A BRANCH CIRCUIT BREAKER, AND SHALL HAVE A RED MARKING , LOC-ON PROVISIONS AND SHALL BE IDENTIFIED AS "FIRE ALARM CIRCUIT CONTROL". THE LOCATION OF THE CIRCUIT DISCONNECT MEANS (CIRCUIT BREAKER) SHALL BE PERMANENTLY IDENTIFIED AT THE FIRE ALARM CONTROL UNIT. THIS REQUIREMENT APPLIES TO ALL NAC CIRCUIT EXTENDER PANELS. OBTAINING POWER FROM THE FIRE ALARM POWER CIRCUIT IS PERMITTED IF THE LOAD ALLOWS.
7. UPDATE THE AS-BUILT DRAWINGS DAILY WITH THE JOB PROGRESS. RETURN THE AS-BUILT DRAWING SET TO THE GENERAL CONTRACTOR NO LATER THAN 7 DAYS AFTER THE SUCCESSFUL FINAL TEST.
8. THE CONTRACTOR WILL MAINTAIN ALL AREAS OF THE BUILDING IN A NEAT AND WORKMANLIKE MANNER.
9. DO NOT APPLY POWER EXCEPT IN THE PRESENCE OF A FACTORY TRAINED TECHNICAL REPRESENTATIVE.
10. ANY SMOKE DETECTOR HEAD INSTALLED BEFORE THE BUILDING IS CLEANED AND ACCEPTED SHALL BE COVERED TO PROTECT FROM DUST. ANY FALSE ALARMS DUE TO DIRT CONTAMINATED HEADS SHALL BE THE RESPONSIBILITY OF THE FIRE ALARM INSTALLER.
11. THE FIRE ALARM INSTALLER WILL MAINTAIN THE FIRE RESISTANCE INTEGRITY OF ALL WALL, CEILING, AND ROOF ANY TIME THAT WORK IS NOT ACTIVELY BEING PERFORMED.
12. INSTALLATION OF DEVICES SHALL BE IN ACCORDANCE WITH THE MANUFACTURER'S INSTRUCTIONS. POWER LIMITED AND NON-POWER LIMITED FIELD WIRING MUST BE INSTALLED WITHIN THE FACP ENCLOSURE IN ACCORDANCE WITH THE MANUFACTURER'S INSTRUCTIONS AND NEC.
13. ALL WIRING SHALL BE INSTALLED CLASS B PER NFPA 72 AND IN ACCORDANCE WITH NFPA 70 (NEC).
14. FIRE ALARM CIRCUITS SHALL BE IDENTIFIED IN ACCORDANCE WITH APPROPRIATE SECTION OF THE NEC 760. MARK ALL FIRE ALARM WIRES IN ACCORDANCE WITH NEC 760 SECTIONS FOR POWER LIMITED AND NON-POWER LIMITED WIRE.
15. FIRE ALARM CABLE INSTALLED IN UNDERGROUND CONDUIT, OR OTHER WET LOCATIONS SHALL BE UL LISTED FOR WET LOCATIONS.
16. FIRE ALARM CIRCUITS EXTENDING BEYOND ONE BUILDING AND RUNNING OUTDOOR SHALL BE INSTALLED IN ACCORDANCE WITH NFPA 70 ARTICLES 760, 725, AND 800 WHERE APPLICABLE.
17. ALL WIRING INCLUDING SHIELDS MUST BE DRY AND FREE OF SHORTS AND GROUNDS.
18. ALL SHIELDED WIRE MUST HAVE SHIELD CONTINUITY AND AT FULL LENGTH OF THE WIRE.
19. ONLY SYSTEM WIRING CAN BE RUN IN THE SAME CONDUIT.
20. 120VAC IS NOT PERMITTED IN THE SAME CONDUIT WITH LOW VOLTAGE WIRING.
21. MAINTAIN 40 PERCENT CONDUIT FILL RATIOS AS PER NEC REQUIREMENTS.
22. ALL WIRES SHALL BE PULLED SPLICE FREE AND SHALL TERMINATE AT DEVICES OR PANELS.
23. ALL WIRING SHALL BE INSTALLED IN NEW CONDUIT. CONDUIT TO BE A MINIMUM OF ¾ INCH WITH A FACTORY APPLIED RED FINISH.
24. PROVIDE RECESSED OR SEMI-RECESSED FACP/EVAX/LVRT PANELS.

LPK architects
LPK ARCHITECTS, P.A.
2208 18TH ST, SUITE D
GULFPORT, MISSISSIPPI 39501
P.O. BOX 7117
GULFPORT, MISSISSIPPI 39506
P: 228.382.3122
F: 601.693.8640
These documents are the sole property of LPK Architects P.A. and are not to reused. Any alterations, revisions or reuse of these documents without the written consent of LPK Architects will result in all sureties and responsibilities for the entire project becoming null and void.
copyright LPK Architects, P.A.

www.GSEeng.com
GSE CONSULTING ENGINEERS
Gulfport Mobile Nashville
1816 Pass Rd. Gulfport, MS 39501
(T)228-864-5050 (F)228-864-7744

PROFESSIONAL SEAL:
JOHN WADE GRIFFIN REGISTERED PROFESSIONAL ENGINEER 14481 STATE OF MISSISSIPPI
11/10/17

REVISION	DATE	DRAWN	APPROVED

UNITED STATES AIR FORCE — AIR EDUCATION AND TRAINING COMMAND
KEESLER AIR FORCE BASE
BILOXI - MISSISSIPPI
OFFICE OF CIVIL ENGINEERS

36 AES WAREHOUSE/OFFICE

FIRE ALARM PLAN

SUBMITTED: (Chief of Contracts Design) D. KINMAN		RECOMMENDED: (Chief of Engineering) A. MARASCA	FACILITY NUMBER: XX.X
DESIGNED: BDD	CHECKED: JTW	SCALE: AS NOTED	DRAWING NUMBER: FA-101
DRAWN: JJH	DATE: 10-04-17	PROJECT NUMBER: MAHG 17-9002	SHEET 1 OF 1