FTEV 16-3001
REPAIR BUILDING 90748, 23 SOWS

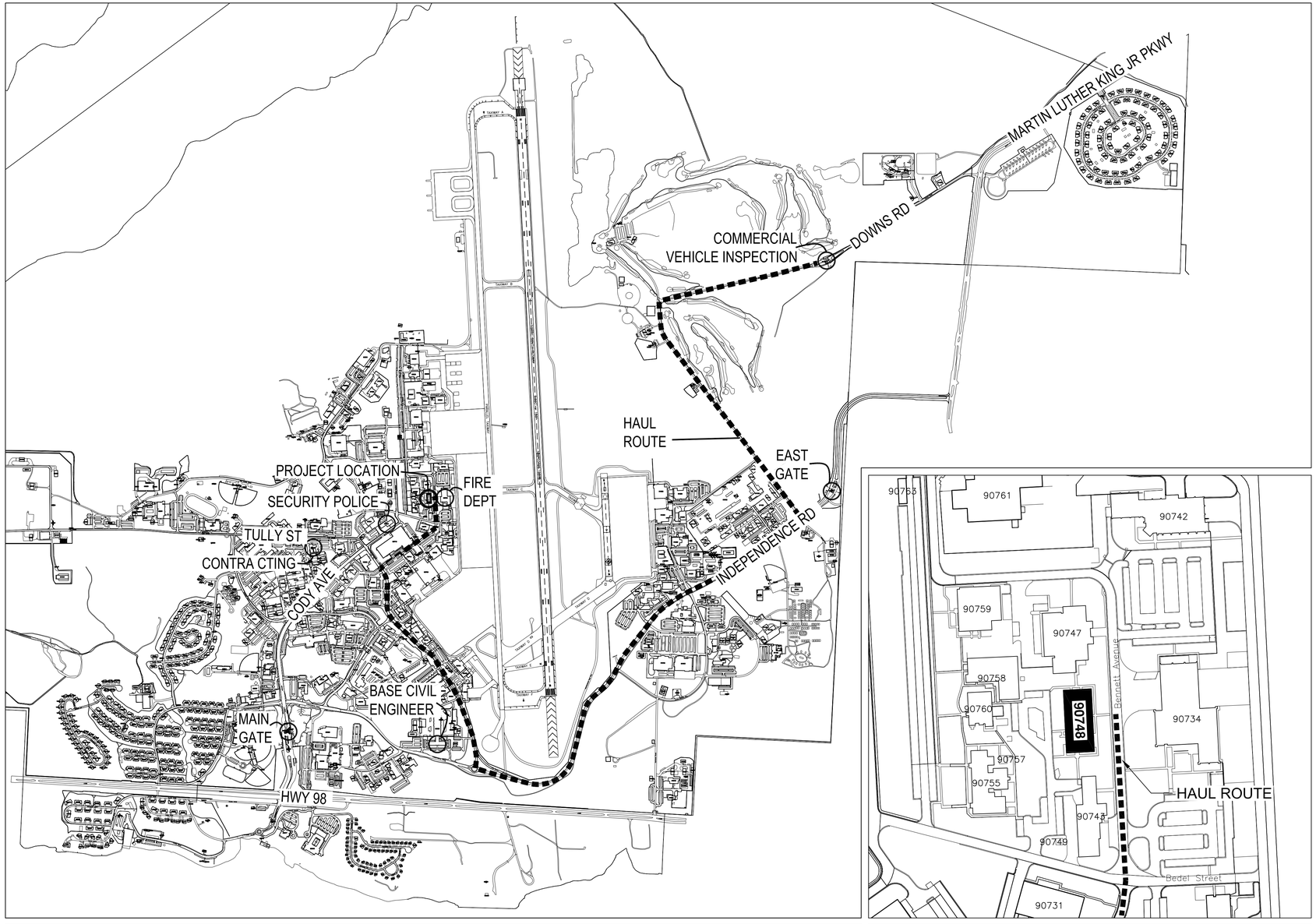

BASE MAP

PROJECT SITE

100% SUBMITTAL

INDEX OF DRAWINGS

SHEET NUMBER	SHEET NAME
GENERAL	
G-001	TITLE SHEET
DEMOLITION	
D-101	FLOOR PLAN - DEMOLITION
LIFE SAFETY	
LS-101	LIFE SAFETY PLAN
ARCHITECTURAL	
A-101	FLOOR PLAN - NEW WORK
A-102	DIMENSIONED FLOOR PLAN
A-103	WALL TYPE PLAN
A-104	SIGNAGE PLAN
A-201	REFLECTED CEILING PLAN
A-301	ENLARGED PLAN, INTERIOR ELEVATIONS
A-401	FINISH AND COLOR SCHEDULE
A-402	DOOR SCHEDULE, DOOR & WINDOW TYPES
A-601	DOOR DETAILS
A-602	DETAILS
A-603	CASEWORK SECTION
FIRE PROTECTION	
FP-001	GENERAL FIRE PROTECTION INFORMATION
FP-101	FIRE PROTECTION PLAN - DEMOLITION
FP-102	FIRE PROTECTION PLAN -NEW WORK
PLUMBING	
P-101	PLUMBING PLAN - DEMOLITION
P-102	PLUMBING PLAN - NEW WORK - WASTE
P-103	PLUMBING PLAN - NEW WORK - WATER
P-501	PLUMBING DETAILS
P-601	SCHEDULES, NOTES AND RISER DIAGRAM
MECHANICAL	
M-001	GENERAL MECHANICAL INFORMATION
M-101	HVAC FLOOR PLAN - DEMOLITION
M-102	HVAC DUCTWORK PLAN - NEW WORK
M-103	HVAC PIPING PLAN - NEW WORK
M-501	MECHANICAL DETAILS
M-502	MECHANICAL DETAILS
M-601	MECHANICAL SCHEDULES
M-602	MECHANICAL CONTROLS
M-603	CHILLED WATER PIPING DIAGRAM
M-604	CHILLED WATER PIPING DIAGRAM
M-605	HOT WATER PIPING DIAGRAM
FIRE ALARM	
FA-001	FIRE ALARM LEGEND AND GENERAL NOTES
FA-002	FIRE ALARM DETAILS AND RISER
FA-100	FIRE ALARM DEMOLITION PLAN
FA-101	FIRE ALARM NEW WORK PLAN
ELECTRICAL	
E-001	ELECTRICAL / TELECOM LEGEND AND GENERAL NOTES
E-002	MOTION SENSOR DETAILS / EMERGENCY LIGHTING DIAGRAM
E-003	LIGHTING FIXTURE SCHEDULE AND DETAILS
E-004	POWER RISER DIAGRAM AND PANEL SCHEDULES
E-005	PANEL SCHEDULES
E-100	ELECTRICAL DEMOLITION PLAN
E-200	NEW WORK POWER PLAN
E-201	NEW WORK MECHANICAL POWER PLAN
E-300	NEW WORK LIGHTING PLAN
E-400	TELECOM / SECURITY FIRST FLOOR PLAN
E-500	TELECOM / SECURITY DETAILS

REV #	DATE	DESCRIPTION

REPAIR BUILDING 90748, 23 SOWS

TITLE SHEET

AIR FORCE SPECIAL OPERATIONS COMMAND
1 SPECIAL OPERATIONS CIVIL ENGINEER SQUADRON
HURLBURT FIELD, FLORIDA

KENNETH C. HOOD
LICENSED
STATE OF FLORIDA
PROFESSIONAL ENGINEER
1/16/18

DATE: 16 JAN. 2018
DESIGNED BY: PDM
DRAWN BY: LRR
BUILDING NUMBER: 90748
PROJECT NUMBER: FTEV 16-3001
SHEET REFERENCE: G-001
SHEET NUMBER: 1 of 48

LEGEND:

EXISTING TO REMAIN / NEW WORK

EXISTING PARTITION TO BE REMOVED.

SHADED AREA INDICATES AREA OF EXISTING CONCRETE FLOOR TO BE REMOVED FOR NEW BATHROOM LOCATIONS AND UTILITIES FOR NEW BATHROOMS.

SHADED AREA INDICATES AREA OF EXISTING CONCRETE PAVING TO BE REMOVED.

EXISTING DOOR AND FRAME TO BE REMOVED.

EXISTING CONSTRUCTION TO REMAIN UNLESS NOTED OTHERWISE. PROTECT FROM DAMAGE DURING EXTENT OF WORK. TYPICAL.

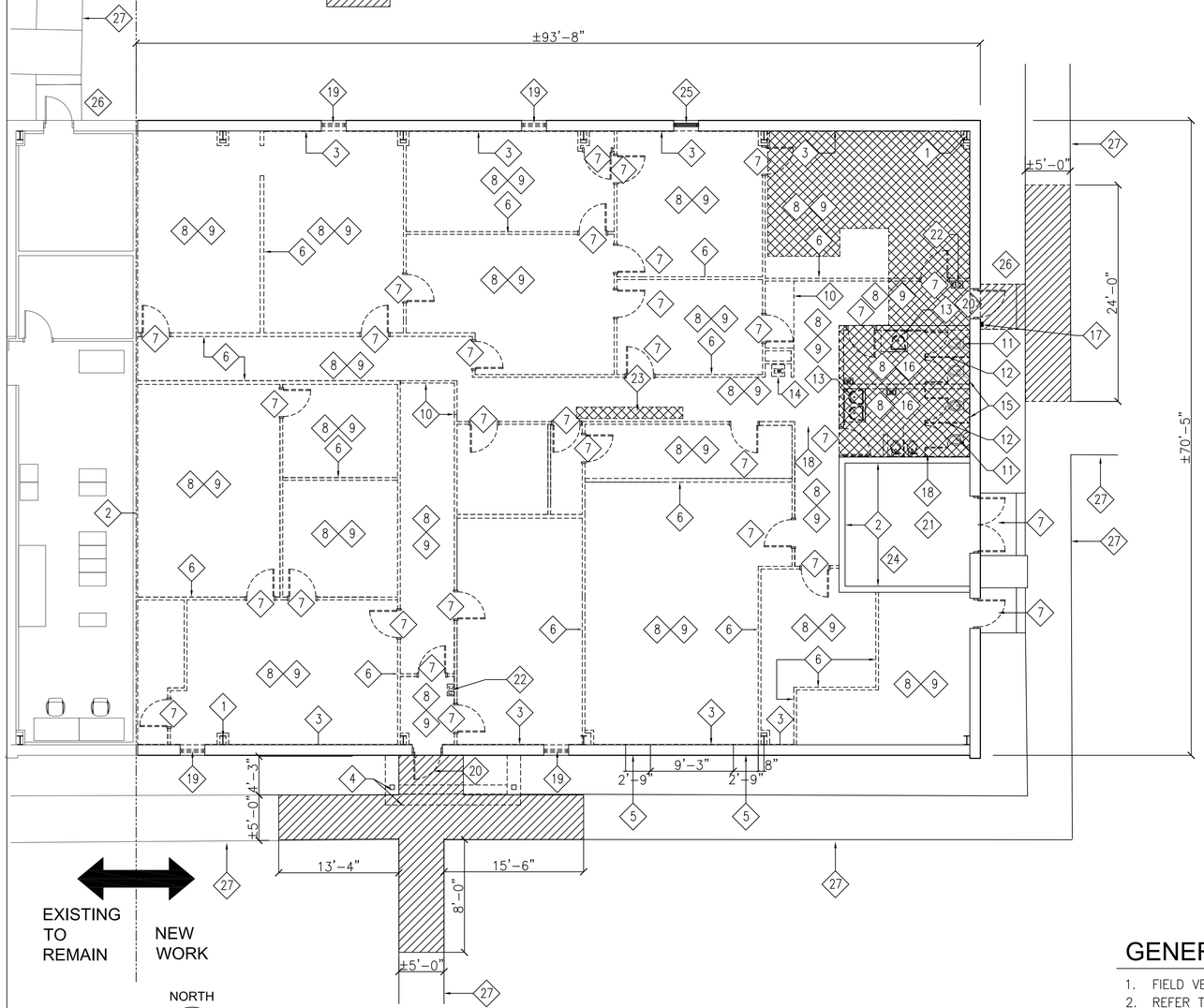

NORTH

FLOOR PLAN - DEMOLITION

SCALE: 1/8" = 1'-0"

NOTE: REFER TO AUGUST 27, 2015 – ASBESTOS, LEAD–BASED PAINT AND INDOOR AIR QUALITY SURVEY INCLUDED IN APPENDIX "A" OF THE TECHNICAL SPECIFICATIONS.

1. 4,140SF OF ASBESTOS–CONTAINING FLOOR TILE MASTIC HAS BEEN IDENTIFIED, REMOVE IN ACCORDANCE WITH FEDERAL, STATE AND LOCAL STANDARDS.
2. LEAD–BASED PAINT WAS NOT DETECTED IN ANY SAMPLING FOR THIS SURVEY.
3. FUNGAL ASSESSMENT – VISIBLE GROWTH WAS NOTED ON THE UNDERSIDE OF ROOF DECK INSULATION, DOORS AND HVAC REGISTERS. CLEAN THE UNDERSIDE OF THE ROOF DECK INSULATION WITH A MILD COMMERCIAL DETERGENT SOLUTION AND VENTILATE TO DRY. DOORS AND HVAC REGISTERS ARE REQUIRED TO BE REMOVED UNDER THIS CONTRACT. WHEN FUNGAL CLEANING/REMEDIATION WORK IS PERFORMED, AND TO MINIMIZE ADDITIONAL POTENTIAL FOR SPREADING MOLD SPORES INTO THE AIR, THE WORK SHALL BE PERFORMED IN COMPLIANCE WITH THE CURRENT VERSION OF THE GUIDELINES REFERENCED BELOW:
   – "MOLD REMEDIATION IN SCHOOLS AND COMMERCIAL BUILDINGS", U.S. ENVIRONMENTAL PROTECTION AGENCY, EPA 402–K–01–001.
   – "IICRC S520 STANDARD AND REFERENCE GUIDE FOR PROFESSIONAL MOLD REMEDIATION", INSTITUTE OF INSPECTION, CLEANING AND RESTORATION CERTIFICATION (11CRC).

KEYNOTES:

1. EXISTING COLUMN TO REMAIN (TYPICAL AS INDICATED).
2. EXISTING WALL TO REMAIN.
3. REMOVE EXISTING FURRING AND GYPSUM BOARD FROM INTERIOR OF EXISTING EXTERIOR WALLS, TYP. PREP SURFACE TO RECEIVE NEW FINISH.
4. EXISTING CANOPY SYSTEM TO REMAIN. PROTECT FROM DAMAGE DURING EXTENT OF WORK.
5. SAW–CUT EXISTING WALL FOR NEW WINDOW OPENING, SIZE AND SILL HEIGHT TO MATCH EXISTING. PROTECT EXISTING WALL CONSTRUCTION TO REMAIN FROM DAMAGE DURING EXTENT OF WORK.
6. REMOVE EXISTING WALL (TYPICAL AS INDICATED).
7. REMOVE EXISTING DOOR & FRAME (TYPICAL AS INDICATED).
8. REMOVE EXISTING FLOOR FINISH AND BASE. CLEAN AND PREP SURFACE TO RECEIVE NEW FINISH.
9. REMOVE EXISTING ACOUSTICAL CEILING TILE AND GRID SYSTEM. REFER TO MECHANICAL AND ELECTRICAL DRAWINGS FOR EXTENT OF DEMOLITION WORK.
10. REMOVE EXISTING GYPSUM BOARD FURR DOWN.
11. REMOVE EXISTING PLUMBING FIXTURES (TYPICAL AS INDICATED).
12. REMOVE EXISTING TOILET PARTITIONS (TYPICAL AS INDICATED).
13. REMOVE EXISTING PLUMBING FIXTURE AND CASEWORK.
14. REMOVE EXISTING ELECTRIC WATER COOLER.
15. REMOVE EXISTING FURRING, GYPSUM BOARD AND CERAMIC TILE FROM INTERIOR OF EXISTING EXTERIOR WALLS, TYP. PREP SURFACE TO RECEIVE NEW FINISH.
16. REMOVE EXISTING GYPSUM BOARD CEILING.
17. REMOVE EXISTING KEYPAD LOCK. PATCH AND REPAIR EXISTING EIFS.
18. SAW CUT SLAB FOR INSTALLATION OF SANITARY DRAINAGE PIPING – SEE PLUMBING.
19. REMOVE EXISTING WINDOW SYSTEM IN ITS ENTIRETY. PREP OPENING TO RECEIVE NEW WALL INFILL. SEE DETAIL 5/A–602.
20. REMOVE EXISTING DOOR & FRAME. CLEAN AND PREP OPENING FOR NEW DOOR AND FRAME.
21. REMOVE EXISTING GYPSUM BOARD CEILING SYSTEM IN ITS ENTIRETY.
22. REMOVE EXISTING FIRE EXTINGUISHER CABINET.
23. SAW–CUT AND REMOVE PORTION OF SLAB FOR INSTALLATION OF NEW FLOOR BOXES, SEE ELECTRICAL AND TELECOM DOCUMENTS .
24. CUT NEW OPENINGS THROUGH EXISTING ROOF INSULATION SYSTEM AND METAL ROOF SYSTEM FOR NEW BOILER EXHAUST FLUE AND FRESH AIR INTAKE PIPE. COORDINATE SIZE AND LOCATION OF PENETRATIONS WITH MECHANICAL DOCUMENTS AND EXISTING ROOF STRUCTURE AND STANDING SEAM METAL ROOFING. PENETRATIONS SHALL BE LOCATED SUCH THAT THEY DO NOT CUT THROUGH STANDING SEAM RIBS, AND DO NOT PREVENT PROPER DRAINAGE OF THE ROOF PANELS AROUND THE NEW PIPE PENETRATIONS. PROTECT EXISTING CONSTRUCTION TO REMAIN FROM DAMAGE DURING EXTENT OF WORK.
25. EXISTING WINDOW SYSTEM TO REMAIN. PROTECT FROM DAMAGE DURING EXTENT OF WORK.
26. EXCAVATE THIS AREA AS REQUIRED TO PROVIDE NEW PRE–ENGINEERED ALUMINUM CANOPY SYSTEM FOOTINGS. PROTECT EXISTING CONSTRUCTION TO REMAIN FROM DAMAGE DURING EXTENT OF WORK.
27. EXISTING SIDEWALK TO REMAIN, UNLESS NOTED OTHERWISE. PROTECT FROM DAMAGE DURING EXTENT OF WORK. TYPICAL.

GENERAL NOTES:

1. FIELD VERIFY EXISTING CONDITIONS PRIOR TO START OF WORK.
2. REFER TO STRUCTURAL, PLUMBING, MECHANICAL AND ELECTRICAL DRAWINGS FOR EXTENT OF DEMOLITION WORK.
3. PATCH/REPAIR ALL THRU–WALL (EXTERIOR & INTERIOR) PENETRATIONS, AS REQUIRED. PREP SURFACE TO RECEIVE NEW FINISH (TYPICAL).
4. CONTRACTOR TO REPLACE OR REPAIR ALL DAMAGED FINISHES TO MATCH EXISTING.

GRAPHIC SCALE 0' 1' 5' 10'

DO NOT SCALE DRAWINGS

100% SUBMITTAL

STATE OF FLORIDA · PHILIP R. MORGAN · 01/16/2018 · AR0014409 · REGISTERED ARCHITECT

REV #	DATE	DESCRIPTION

REPAIR BUILDING 90748, 23 SOWS

FLOOR PLAN - DEMOLITION

AIR FORCE SPECIAL OPERATIONS COMMAND
1 SPECIAL OPERATIONS CIVIL ENGINEER SQUADRON
HURLBURT FIELD, FLORIDA

DATE: 16 JAN 2018
DESIGNED BY: PDM
DRAWN BY: JE FULLER
BUILDING NUMBER: 90748
PROJECT NUMBER: FTEV 16-3001
SHEET REFERENCE: D-101
SHEET NUMBER: 2 of 48

KEYNOTES:

1. KNOX BOX. COORDINATE LOCATION WITH BASE FIRE DEPARTMENT.
2. SEE SHEET A-101 FOR SIDEWALK DETAILS, THIS AREA.

LEGEND:

- EXISTING TO REMAIN, TYPICAL. PROTECT FROM DAMAGE DURING EXTENT OF WORK.
- NEW WALL CONSTRUCTION, TYPICAL.
- TWO-HOUR FIRE RATED CONSTRUCTION, TYPICAL. SEE WALL TYPES PLAN.
- ONE-HOUR FIRE RATED CONSTRUCTION, TYPICAL. SEE WALL TYPES PLAN.
- GOVERNMENT-FURNISHED/GOVERNMENT INSTALLED FURNITURE/EQUIPMENT UNLESS NOTED OTHERWISE (N.I.C.)
- WALL TYPE KEY. SEE WALL TYPES PLAN.
- 180 PRIMARY EGRESS/CAPACITY
- 0'-0" EGRESS ROUTE W/ TRAVEL DISTANCE
- WALL MOUNTED EXIT LIGHT. SEE ELECTRICAL DOCUMENTS.

GENERAL NOTES:

1. FIELD VERIFY EXISTING CONDITIONS PRIOR TO START OF WORK.
2. REFER TO STRUCTURAL, PLUMBING, MECHANICAL AND ELECTRICAL DRAWINGS FOR EXTENT OF NEW WORK.
3. PATCH/REPAIR ALL THRU-WALL (EXTERIOR & INTERIOR) PENETRATIONS, AS REQUIRED. PREP SURFACE TO RECEIVE NEW FINISH (TYPICAL).
4. CONTRACTOR TO REPLACE OR REPAIR ALL DAMAGED FINISHES TO MATCH EXISTING.

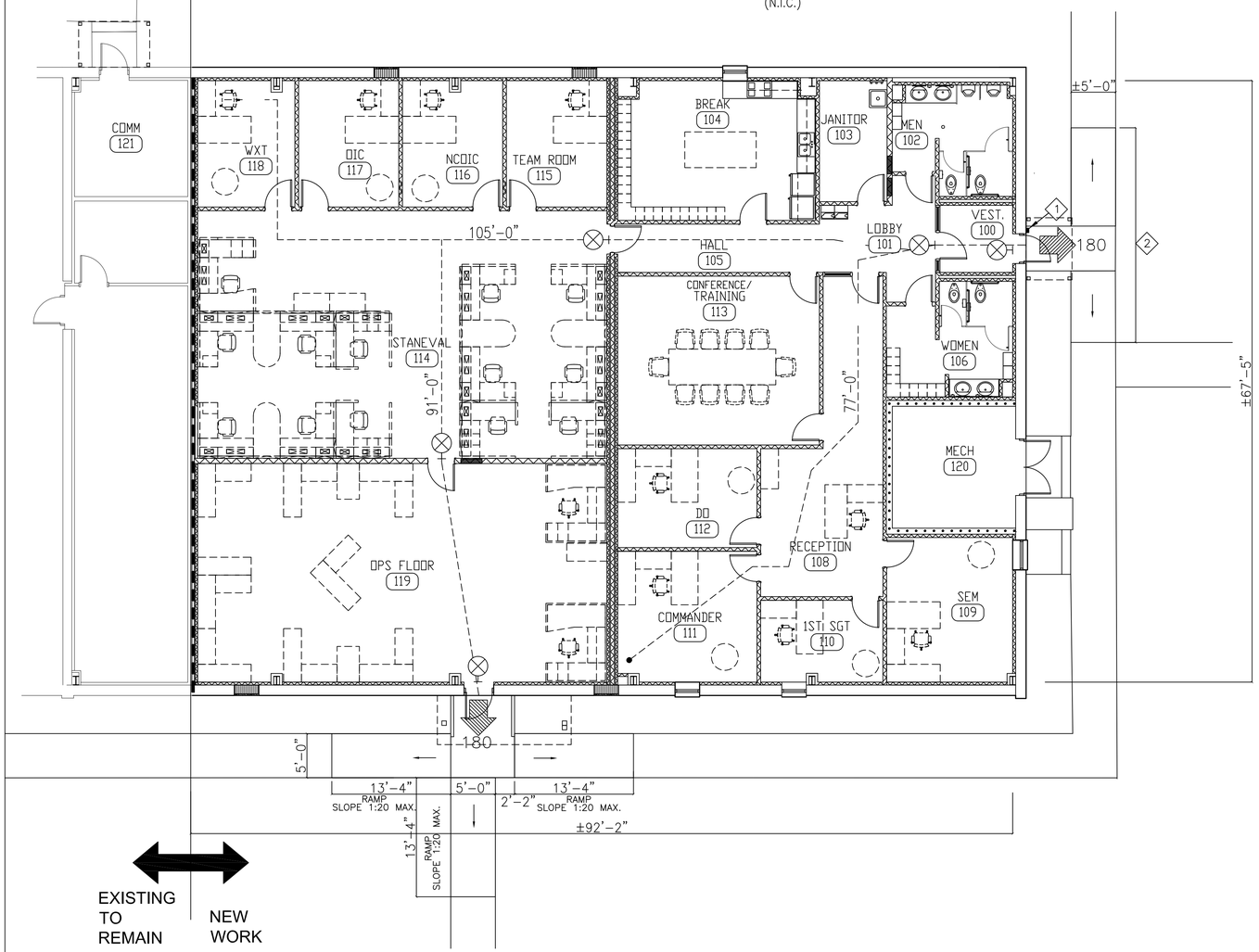

NORTH

LIFE SAFETY PLAN

SCALE: 1/8" = 1'-0"

NFPA 101, 2018 EDITION

CLASSIFICATION OF OCCUPANCY: BUSINESS (B)

NFPA 101 CHAPTER12 & CHAPTER 38

HAZARD OF CONTENTS: ORDINARY HAZARD NFPA 101 6.2.2.3

NO SPECIAL MINIMUM CONSTRUCTION REQUIREMENTS NFPA 101 CHAPTER 38, PARA. 38.1.6

OCCUPANT LOAD PER NFPA CHAPTER 7, TABLE 7.3.1.2:

BUSINESS: ONE (1) PERSON PER 100 S.F.
5,036 S.F. = 50 OCC.
CONFERENCE: ONE (1) PERSON PER 15 S.F.
430 S.F. = 29 OCC.
BREAK ROOM: ONE (1) PERSON PER 15 S.F. OR NUMBER OF LOCKERS (GOVERNMENT-FURNISHED/GOVERNMENT-INSTALLED) WHICHEVER IS GREATER. ACTUAL NUMBER OF LOCKERS IS UNKNOWN.
337 S.F. = 22 OCC.

TOTAL = 101 OCCUPANTS MAXIMUM ALLOWED

LIFE SAFETY ANALYSIS

NFPA 101 (2018 EDITION) 1-5 ASSUMPTION:
THE PROTECTION METHOD ASSUMES A SINGLE FIRE SOURCE.

IBC (2015) OCCUPANCY CLASSIFICATION:
TYPE IIB, NON-COMBUSTIBLE CONSTRUCTION.

ALLOWABLE HEIGHT AND AREA (TABLE 503):
GROUP B: TYPE IIB ALLOWABLE HEIGHT: 4 STORIES;
GROUP B: TYPE IIB ALLOWABLE AREA: 23,000 SF/FLOOR

ACTUAL PROJECT GROSS SQUARE FOOTAGE:
IST FLOOR: 6,587 GSF

BUILDING IS FULLY SPRINKLERED

DEAD-END CORRIDORS:
50 FEET MAXIMUM IN BUILDINGS PROTECTED THROUGHOUT BY SUPERVISED AUTOMATIC SPRINKLER SYSTEM.

NFPA 101, TABLE 7.3.3.1, CAPACITY FACTORS
PROVIDED (2) 36" DOOR WITH 34" CLEAR DOOR OPENING.
34"/.2 = 170 (X2) = 340 OCCUPANTS

MINIMUM WIDTH OF EXIT ACCESS:
NOT LESS THAN 36 INCHES NFPA 101 7.3.4.1

NUMBER OF EXITS:
NOT LESS THAN (2) MEANS OF EGRESS SHALL BE PROVIDED FROM EACH BUILDING.
NUMBER OF EXITS PROVIDED: 2 EXITS

ARRANGEMENT OF EXITS:
IN ACCORDANCE WITH NFPA 101 38.2.5.

TRAVEL DISTANCE:
COMMON PATH OF TRAVEL SHALL NOT EXCEED 100 FEET IN A BUILDINGS PROTECTED THROUGHOUT BY AN APPROVED SUPERVISED AUTOMATIC FIRE SPRINKLER SYSTEM IN ACCORDANCE WITH 9.7.1.1(1). NFPA 101 38.2.5.3.1.

TRAVEL DISTANCE TO AN EXIT SHALL NOT EXCEED 300 FEET IN A BUSINESS OCCUPANCIES PROTECTED THROUGHOUT BY A SUPERVISED FIRE SPRINKLER SYSTEM IN ACCORDANCE WITH SECTION 9.7 NFPA38.2.6.3

DO NOT SCALE DRAWINGS

100% SUBMITTAL

GRAPHIC SCALE 0' 1' 5' 10'

REV #	DATE	DESCRIPTION

REPAIR BUILDING 90748, 23 SOWS

LIFE SAFETY PLAN

AIR FORCE SPECIAL OPERATIONS COMMAND
1 SPECIAL OPERATIONS CIVIL ENGINEER SQUADRON
HURLBURT FIELD, FLORIDA

DATE: 16 JAN 2018
DESIGNED BY: PDM
DRAWN BY: JE FULLER
BUILDING NUMBER: 90748
PROJECT NUMBER: FTEV 16-3001
SHEET REFERENCE: LS-101
SHEET NUMBER: 3 of 48

GENERAL NOTES:

1. FIELD VERIFY EXISTING CONDITIONS PRIOR TO START OF WORK.
2. REFER TO STRUCTURAL, PLUMBING, MECHANICAL AND ELECTRICAL DRAWINGS FOR EXTENT OF NEW WORK.
3. PATCH/REPAIR ALL THRU-WALL (EXTERIOR & INTERIOR) PENETRATIONS, AS REQUIRED. PREP SURFACE TO RECEIVE NEW FINISH (TYPICAL).
4. CONTRACTOR TO REPLACE OR REPAIR ALL DAMAGED FINISHES TO MATCH EXISTING.
5. CONTRACTOR SHALL MAINTAIN THE 1 HOUR FIRE RATED SEPARATION BETWEEN NORTH AND SOUTH OCCUPANCIES AND MECHANICAL ROOM.

EXISTING TO REMAIN / NEW WORK

LEGEND:

- EXISTING TO REMAIN, TYPICAL. PROTECT FROM DAMAGE DURING EXTENT OF WORK.
- NEW WALL CONSTRUCTION, TYPICAL. SEE WALL TYPES. SEE WALL TYPES PLAN.
- NEW 8" THICK REINFORCED CMU FILLED SOLID WITH CONCRETE, WITH EXTERIOR SURFACED WITH 2" THICK EXTERIOR INSULATION AND FINISH SYSTEM. SEE DETAIL 5/A-602.
- NEW REINFORCED CONCRETE SLAB OVER 10MIL VAPOR BARRIER OVER COMPACTED BASE TREATED WITH TERMITICIDE AT NEW BATHROOM LOCATION. NEW SLAB SHALL MATCH/FLUSH OUT WITH EXISTING SLAB.
- NEW 4" THICK REINFORCED CONCRETE SLAB. SEE DETAILS 1/A-101 AND 2/A-101. TYPICAL.
- PROVIDE NEW SOD, THIS AREA. TYPICAL ALL AREAS DISTURBED BY WORK. EXTEND A MINIMUM OF 5'-0" BEYOND AREA DISTURBED BY WORK.
- GOVERNMENT-FURNISHED/GOVERNMENT INSTALLED FURNITURE/EQUIPMENT UNLESS NOTED OTHERWISE (N.I.C.)
- (01) DOOR KEY. SEE DOOR SCHEDULE.
- (A) WINDOW KEY. SEE WINDOW TYPES.
- CG CORNER GUARD. SEE SPECIFICATIONS.

KEYNOTES:

1. NEW PRE-ENGINEERED, PRE-FINISHED ALUMINUM CANOPY SYSTEM. SEE DETAIL 3/A-603.
2. COORDINATE NEW THROUGH-ROOF PENETRATIONS FOR BOILER FLUE AND FRESH AIR INTAKE PIPE WITH MECHANICAL DOCUMENTS, EXISTING ROOF STRUCTURE, AND EXISTING STANDING SEAM METAL ROOFING. NEW PENETRATIONS SHALL NOT CUT THROUGH EXISTING STANDING SEAM METAL ROOF PANEL RIBS, NOR SHALL THEY OBSTRUCT PROPER DRAINAGE OF ROOF PANELS AROUND NEW PIPE PENETRATIONS. NEW PIPES SHALL BE FLASHED TO THE EXISTING STANDING SEAM METAL ROOF PANELS WITH DEKTITE EPDM FLASHING BOOTS OR APPROVED EQUIVALENT, SIZED FOR SPECIFIC PIPE PENETRATIONS. SEAL ABANDONED THROUGH ROOF PENETRATIONS WITH NEW PRE-FINISHED 24GA SHEET METAL, FASTENED THROUGH EXISTING PANELS, OVERLAPPING OPENINGS NO LESS THAN 2" ALL SIDES. SHEET METAL SHALL BE SET IN FULL BED OF ELASTOMERIC SEALANT, AND ENTIRE PERIMETER OF SHEET METAL SEALED WITH ELASTOMERIC SEALANT. SEALANT SHALL BE COMPATIBLE WITH EXISTING STANDING SEAM METAL ROOFING. COLOR OF NEW SHEET METAL AND SEALANT SHALL MATCH EXISTING ROOF COLOR.
3. EXISTING SIDEWALK TO REMAIN, TYPICAL. PROTECT FROM DAMAGE DURING EXTENT OF WORK.
4. EXISTING CANOPY, SUPPORT COLUMNS, AND DOWNSPOUT TO REMAIN, TYPICAL. PROTECT FROM DAMAGE DURING EXTENT OF WORK.
5. NEW 3'-0" X 4'-4" RECESS-MOUNTED METAL WALK-OFF GRATE, EQUAL TO MODEL RG-720 BY PAWLING CORPORATION 32 NELSON HILL ROAD, P.O. BOX 200 WASSAIC, NEW YORK 12592 (800-431-3456). PROVIDE 4" DRAIN AND 4" PVC DRAIN PIPE IN BOTTOM OF RECESS. PIPE SHALL BE ROUTED TO NEAREST STORM DRAIN INLET. PROVIDE POSITIVE SLOPE IN PIPE FROM RECESS TO EXISTING STORM INLET. SEE DETAIL 2/A-603.
6. NEW KNOX BOX. COORDINATE MODEL AND LOCATION W/ BASE FIRE DEPARTMENT.
7. NEW WALL OPENING AND WINDOW SYSTEM TO MATCH EXISTING.
8. NEW WALL INFILL AND WINDOW SYSTEM TO MATCH EXISTING.
9. NEW WALL INFILL SHALL BE 8" REINFORCED CMU AND EXTERIOR FINISH SYSTEM, FULL WIDTH AND HEIGHT OF EXISTING OPENING. SEE DETAIL 5/A-602.
10. EXISTING TAPERED COLUMNS SHALL REMAIN, AND BE FURRED OUT WITH 2-1/2" 20GA GALV. STEEL STUDS AT 16" O.C. WITH 5/8" TYPE 'X' GYPSUM BOARD ONE SIDE. GYPSUM BOARD SHALL BE MOLD AND MOISTURE-RESISTANT IN RESTROOMS, HOLD STUDS AS TIGHT TO COLUMNS AS POSSIBLE TO MINIMIZE ENCROACHMENT INTO FLOOR SPACE. TYPICAL.

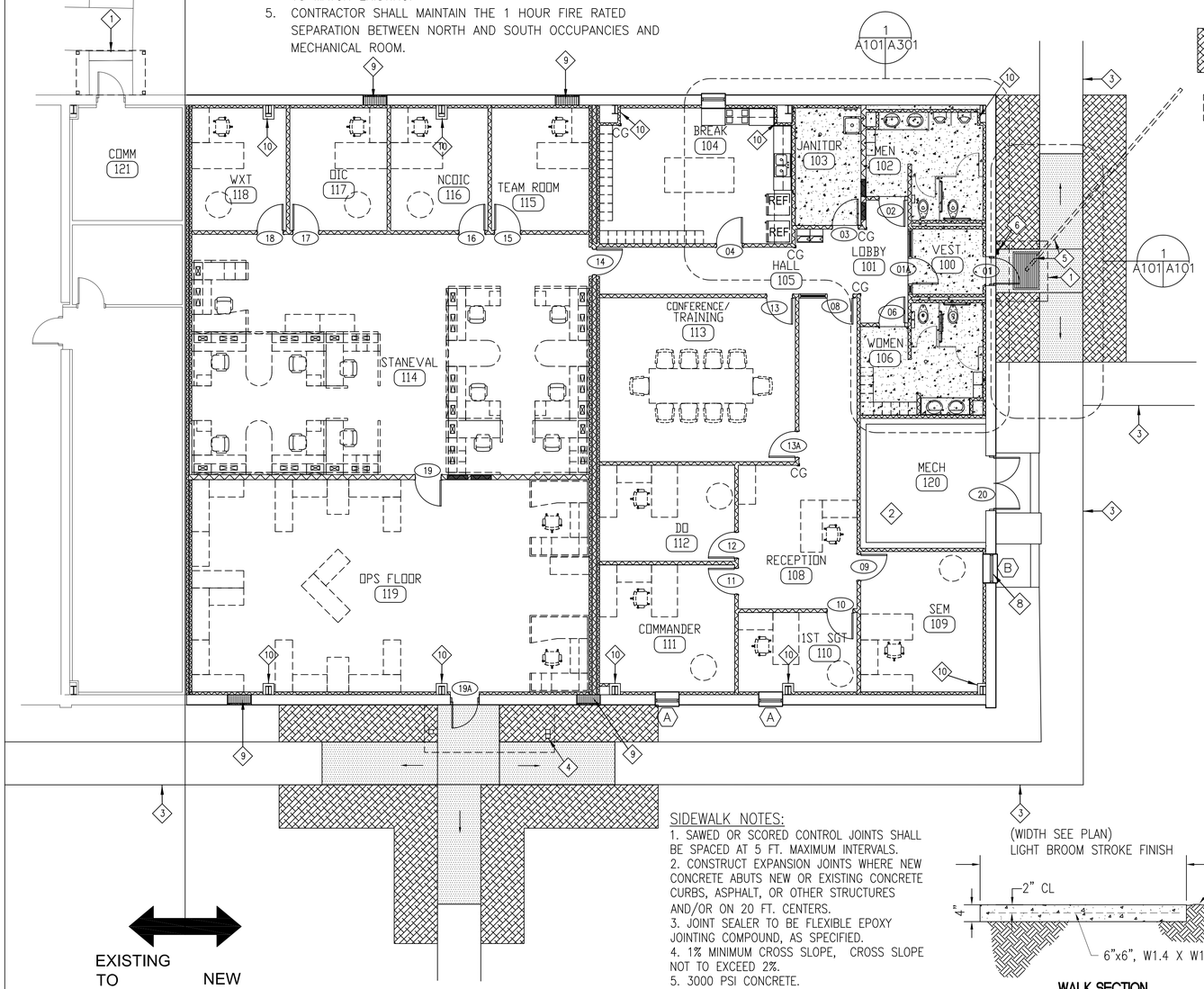

FLOOR PLAN - NEW WORK

SCALE: 1/8" = 1'-0"

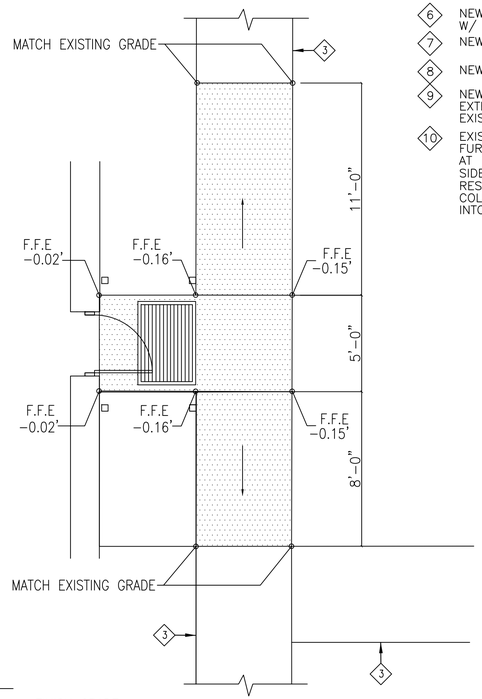

1 / A-101 ENLARGED LAYOUT
N.T.S.

SIDEWALK NOTES:
1. SAWED OR SCORED CONTROL JOINTS SHALL BE SPACED AT 5 FT. MAXIMUM INTERVALS.
2. CONSTRUCT EXPANSION JOINTS WHERE NEW CONCRETE ABUTS NEW OR EXISTING CONCRETE CURBS, ASPHALT, OR OTHER STRUCTURES AND/OR ON 20 FT. CENTERS.
3. JOINT SEALER TO BE FLEXIBLE EPOXY JOINTING COMPOUND, AS SPECIFIED.
4. 1% MINIMUM CROSS SLOPE, CROSS SLOPE NOT TO EXCEED 2%.
5. 3000 PSI CONCRETE.

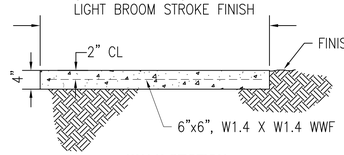

WALK SECTION
N.T.S.

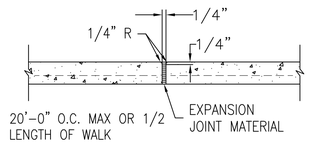

CONSTRUCTION JOINT
N.T.S.

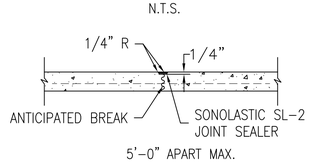

CONTROL JOINT
N.T.S.

2 / A-101 SIDEWALK DETAIL
N.T.S.

GRAPHIC SCALE 0' 1' 5' 10'

DO NOT SCALE DRAWINGS

100% SUBMITTAL

REPAIR BUILDING 90748, 23 SOWS

FLOOR PLAN - NEW WORK

REV #	DATE	DESCRIPTION

AIR FORCE SPECIAL OPERATIONS COMMAND
1 SPECIAL OPERATIONS CIVIL ENGINEER SQUADRON
HURLBURT FIELD, FLORIDA

DATE: 16 JAN 2018
DESIGNED BY: PDM
DRAWN BY: JE FULLER
BUILDING NUMBER: 90748
PROJECT NUMBER: FTEV 16-3001
SHEET REFERENCE: A-101
SHEET NUMBER: 4 of 48

STATE OF FLORIDA
PHILLIP D. MORGAN
01/16/2018
AR0014409
REGISTERED ARCHITECT

GENERAL NOTES:

1. FIELD VERIFY EXISTING CONDITIONS PRIOR TO START OF WORK.
2. REFER TO STRUCTURAL, PLUMBING, MECHANICAL AND ELECTRICAL DRAWINGS FOR EXTENT OF NEW WORK.
3. PATCH/REPAIR ALL THRU-WALL (EXTERIOR & INTERIOR) PENETRATIONS, AS REQUIRED. PREP SURFACE TO RECEIVE NEW FINISH (TYPICAL).
4. CONTRACTOR TO REPLACE OR REPAIR ALL DAMAGED FINISHES TO MATCH EXISTING.

LEGEND:

EXISTING TO REMAIN, TYPICAL. PROTECT FROM DAMAGE DURING EXTENT OF WORK.

NEW WALL CONSTRUCTION, TYPICAL. SEE WALL TYPES PLAN.

NEW 8" THICK REINFORCED CMU FILLED SOLID WITH CONCRETE, WITH EXTERIOR SURFACED WITH 2" THICK EXTERIOR INSULATION AND FINISH SYSTEM. SEE DETAIL 5/A-602.

KEYNOTES:

1. EXISTING SIDEWALK TO REMAIN, TYPICAL. PROTECT FROM DAMAGE DURING EXTENT OF WORK.
2. EXISTING CANOPY, SUPPORT COLUMNS, AND DOWNSPOUT TO REMAIN, TYPICAL. PROTECT FROM DAMAGE DURING EXTENT OF WORK.
3. NEW WALL OPENING AND WINDOW SYSTEM SHALL MATCH EXISTING.
4. NEW WALL INFILL AND WINDOW SYSTEM SHALL MATCH EXISTING.

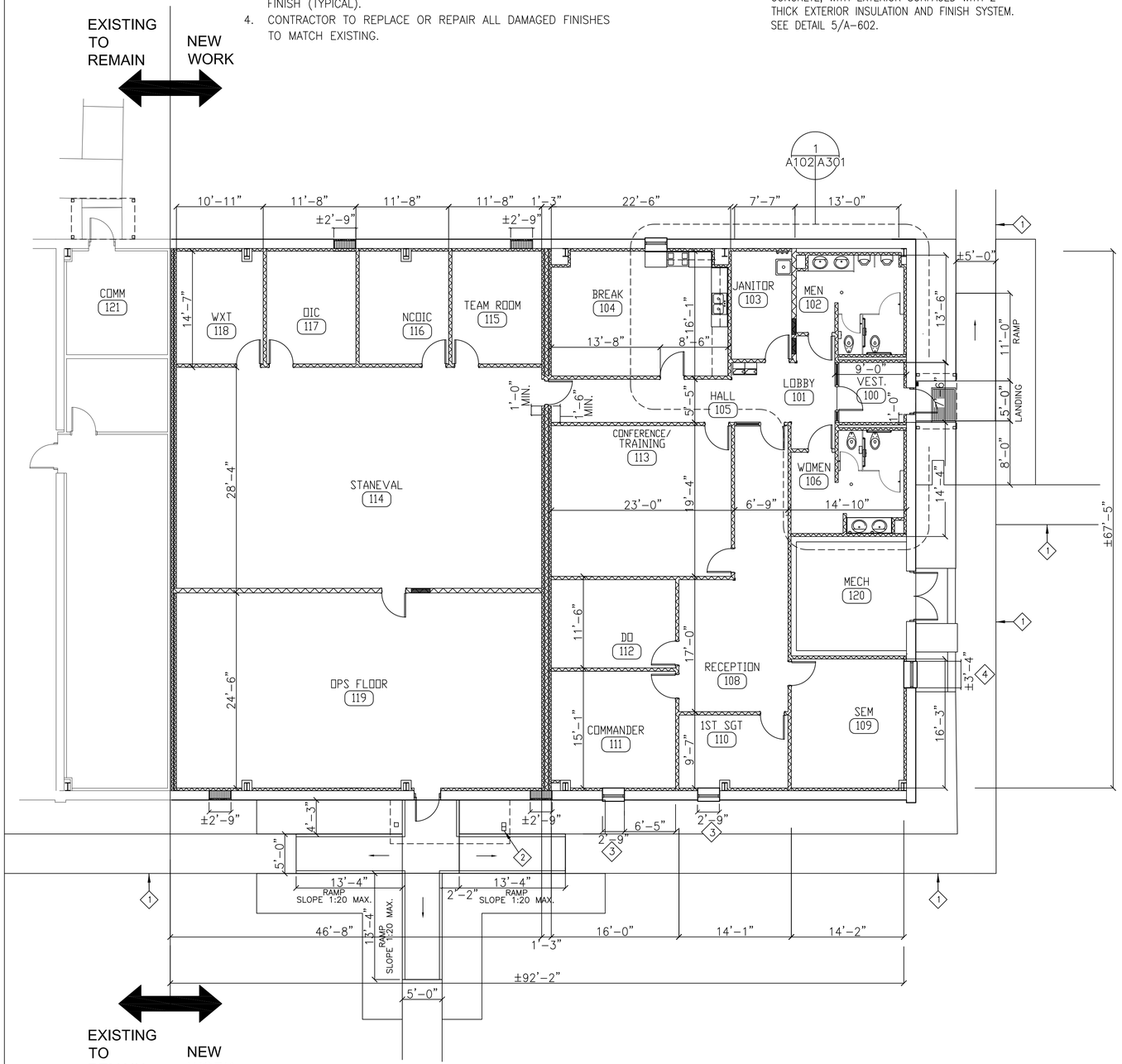

DIMENSIONED FLOOR PLAN

SCALE: 1/8" = 1'-0"

GRAPHIC SCALE 0 1' 5' 10'

DO NOT SCALE DRAWINGS

100% SUBMITTAL

STATE OF FLORIDA PHILIP B. MORGAN 01/16/2018 AR0014409 REGISTERED ARCHITECT

REV #	DATE	DESCRIPTION

REPAIR BUILDING 90748, 23 SOWS

DIMENSIONED FLOOR PLAN

AIR FORCE SPECIAL OPERATIONS COMMAND
1 SPECIAL OPERATIONS CIVIL ENGINEER SQUADRON
HURLBURT FIELD, FLORIDA

DATE: 16 JAN 2018
DESIGNED BY: PDM
DRAWN BY: JE FULLER
BUILDING NUMBER: 90748
PROJECT NUMBER: FTEV 16-3001
SHEET REFERENCE: A-102
SHEET NUMBER: 5 of 48

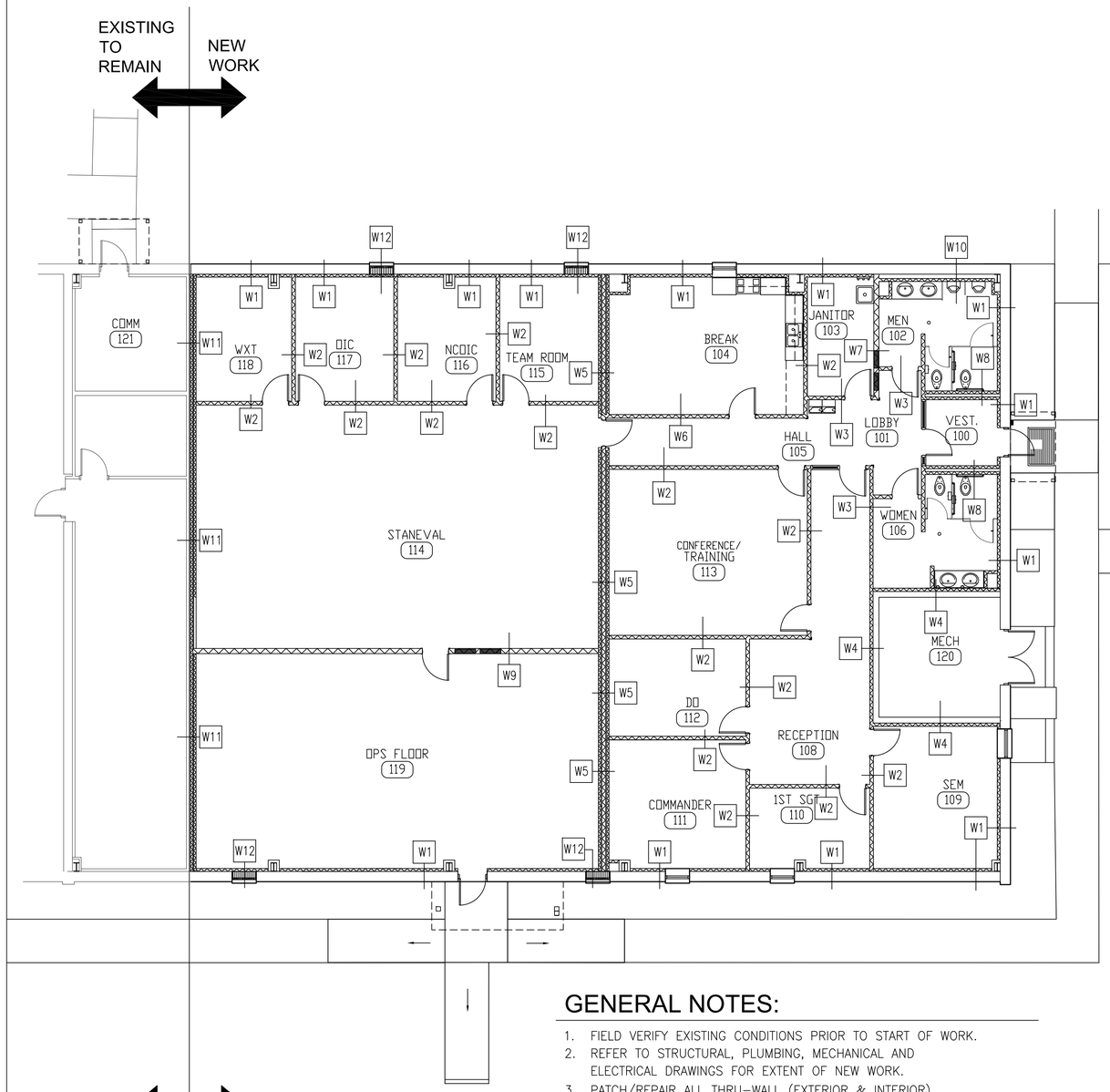

EXISTING TO REMAIN

NEW WORK

NORTH

WALL TYPE PLAN

SCALE: 1/8" = 1'-0"

GENERAL NOTES:

1. FIELD VERIFY EXISTING CONDITIONS PRIOR TO START OF WORK.
2. REFER TO STRUCTURAL, PLUMBING, MECHANICAL AND ELECTRICAL DRAWINGS FOR EXTENT OF NEW WORK.
3. PATCH/REPAIR ALL THRU-WALL (EXTERIOR & INTERIOR) PENETRATIONS, AS REQUIRED. PREP SURFACE TO RECEIVE NEW FINISH (TYPICAL).
4. CONTRACTOR TO REPLACE OR REPAIR ALL DAMAGED FINISHES TO MATCH EXISTING.
5. SEAL ALL THROUGH-WALL PENETRATIONS IN FIRE-RATED WALLS WITH FIRE-RATED SEALANT EQUAL TO RATING OF FIRE WALL.
6. SEAL ALL THROUGH-WALL PENETRATIONS IN STC-RATED WALLS WITH ACOUSTICAL SEALANT EQUAL TO STC RATING OF WALL.

WALL TYPES:

W1 EXISTING MASONRY WALL CONSTRUCTION AND EIFS EXTERIOR FINISH TO REMAIN, WITH NEW 2-1/2" 20GA GALV. STEEL STUDS AT 16" O.C. HELD OFF INTERIOR FACE OF EXISTING WALL 1-1/2", WITH 5/8" TYPE 'X' GYPSUM BOARD, AND 3" UNFACED BATT INSULATION ALL STUD SPACES, FULL HEIGHT OF WALL. WALL SHALL EXTEND FROM SLAB TO 8" ABOVE FINISH CEILING. BRACE STUDS TO EXTERIOR WALL. SEE FINISH SCHEDULE. PROVIDE NEW 2-1/2" 20GA GALV. STEEL STUDS AT 16" O.C. FROM TOP OF EXISTING CMU WALL TO UNDERSIDE OF EXISTING ROOF INSULATION, OUTSIDE FACE OF STUDS PASSING INSIDE EDGE OF EXISTING STEEL "Z" PURLIN. SHEATH STUDS WITH 5/8" THICK TYPE 'X' EXTERIOR GYPSUM SHEATHING BOARD, CONTINUOUS, AT INSIDE FACE OF STUDS, ALL JOINTS TAPED. PROVIDE NEW CLOSED CELL SPRAY URETHANE FOAM FROM TOP OF EXISTING CMU TO UNDERSIDE OF EXISTING VINYL-FACED BATT INSULATION, FROM GYPSUM BOARD TO INSIDE FACE OF CMU. TRIM EXCESS SPRAY URETHANE FOAM FLUSH WITH INSIDE FACE OF CMU, TYPICAL ENTIRE LENGTH OF ALL EXTERIOR WALLS. SEE DETAIL 4/A-602.

W2 NEW 3-5/8" 20GA GALV. STEEL STUDS AT 16" O.C. WITH 3" UNFACED BATT INSULATION ALL STUD CAVITIES, FULL HEIGHT OF WALL, WITH 5/8" TYPE 'X' GYPSUM BOARD, ONE LAYER ON ONE SIDE, AND TWO LAYERS ON OPPOSITE SIDE. WALL SHALL EXTEND FROM SLAB TO DECK ABOVE AND SEAL ALL PENETRATIONS THRU WALL. SEE FINISH SCHEDULE. PROVIDE CONTINUOUS BEAD OF ACOUSTICAL SEALANT BETWEEN BOTTOM OF GYPSUM BOARD AND FLOOR SLAB. WALL SYSTEM SHALL BE STC 45.

W3 NEW 3-5/8" 20GA GALVANIZED METAL STUDS @ 16" O.C. WITH 5/8" CEMENTITIOUS BACKERBOARD ON RESTROOM SIDE ONLY EXTEND TO 8" ABOVE ADJACENT FINISHED CEILING AND 5/8" TYPE "X" GYPSUM BOARD ON OPPOSITE SIDE TO 8" ABOVE FINISHED CEILING. SEAL ALL PENETRATIONS THRU WALL. PROVIDE 3" UNFACED BATT INSULATION ALL STUD CAVITIES, FULL HEIGHT OF WALL. SEE FINISH SCHEDULE.

W4 EXISTING WALL CONSTRUCTION TO REMAIN, WITH NEW 2-1/2" 20GA GALV. STEEL STUDS AT 16" O.C., HELD OFF EXISTING WALL 1-1/2" WITH 5/8" TYPE 'X' GYPSUM BOARD AND 3" UNFACED BATT INSULATION ALL STUD SPACES FULL HEIGHT OF WALL. WALL SHALL EXTEND FROM SLAB TO 8" ABOVE FINISH CEILING. PROVIDE 5/8" TYPE 'X' CEMENTITIOUS BACKER BOARD AT RESTROOM. PATCH AND REPAIR EXISTING WALL TO ENSURE UNCONDITIONED AIR IS SEALED OUT AND PROPER FIRE SEPARATION IS MAINTAINED. SEE FINISH SCHEDULE.

W5 NEW 3-5/8" 20GA GALVANIZED METAL STUDS @ 16" O.C. WITH 5/8" TYPE 'X' GYPSUM BOARD BOTH SIDES, AND ALL STUD CAVITIES FILLED SOLID W/ 3" UNFACED BATT INSULATION ALL STUD CAVITIES, FULL HEIGHT OF WALL, WITH 2-1/2" 20GA GALV. STEEL STUDS HELD OFF FACE OF NEW GYPSUM BOARD 1-1/2", BOTH SIDES OF NEW 3-5/8" STUD WALL. PROVIDE 5/8" TYPE 'X' GYPSUM BOARD ON OUTSIDE FACE OF 2-1/2" STUDS. 2-1/2" STUDS SHALL EXTEND TO 8" ABOVE FINISH CEILING. 3-5/8" STUD WALLS SHALL EXTEND FROM SLAB TO UNDERSIDE OF ROOF DECK. PROVIDE CONTINUOUS BEAD OF ACOUSTICAL SEALANT BETWEEN BOTTOM OF GYPSUM BOARD AND FLOOR SLAB. SEE FINISH SCHEDULE. WALL SYSTEM SHALL BE STC 45.

W6 NEW 3-5/8" 20GA GALV. STEEL STUDS AT 16" O.C. WITH 3" UNFACED BATT INSULATION ALL STUD CAVITIES, FULL HEIGHT OF WALL, WITH 5/8" TYPE 'X' GYPSUM BOARD, BOTH SIDES. WALL SHALL EXTEND FROM SLAB TO 8" ABOVE FINISH CEILING. BRACE WALL TO ROOF STRUCTURE ABOVE WITH 3-5/8" 20GA GALV. STEEL STUDS AT 32" O.C., ALTERNATING. SEE FINISH SCHEDULE.

W7 NEW 6" 20GA GALV. STEEL STUDS AT 16" O.C. WITH 3" UNFACED BATT INSULATION ALL STUD CAVITIES, FULL HEIGHT OF WALL, WITH 5/8" TYPE 'X' MOLD & MOISTURE-RESISTANT CEMENTITIOUS BACKERBOARD ON RESTROOM SIDE, AND 5/8" TYPE 'X' MOLD & MOISTURE RESISTANT GYPSUM BOARD ON JANITOR'S SIDE. WALL THICKNESS TO ACCOMMODATE FLUSH-MOUNTED ELECTRICAL PANELS. WALL SHALL EXTEND FROM SLAB TO UNDERSIDE OF ROOF DECK AND SEAL ALL PENETRATIONS THRU WALL. PROVIDE CONTINUOUS BEAD OF ACOUSTICAL SEALANT BETWEEN BOTTOM OF GYPSUM BOARD AND FLOOR SLAB. SEE FINISH SCHEDULE.

W8 NEW TWO ROWS OF 3-5/8" 20GA GALVANIZED METAL STUDS @ 16" O.C. W/ 5/8" CEMENTITIOUS BACKERBOARD ON RESTROOM SIDE ONLY EXTEND TO 8" ABOVE ADJACENT FINISHED CEILING AND 5/8" TYPE "X" MOLD & MOISTURE-RESISTANT GYPSUM BOARD TO 8" ABOVE FINISHED CEILING. SEAL ALL PENETRATIONS THRU WALL. PROVIDE 3" UNFACED BATT INSULATION ALL STUD CAVITIES, FULL HEIGHT OF WALL. SEE FINISH SCHEDULE.

W9 NEW 6" 20GA GALVANIZED METAL STUDS @ 16" O.C. WITH TWO LAYERS 5/8" TYPE 'X' GYPSUM BOARD ONE SIDE, AND ONE LAYER 5/8" TYPE 'X' GYPSUM BOARD ON OPPOSITE SIDE. WALL SHALL EXTEND FROM SLAB TO DECK ABOVE AND SEAL ALL PENETRATIONS THRU WALL. PROVIDE 3" UNFACED BATT INSULATION ALL STUD CAVITIES, FULL HEIGHT OF WALL. SEE FINISH SCHEDULE.

W10 EXISTING MASONRY WALL CONSTRUCTION AND EIFS EXTERIOR FINISH TO REMAIN, WITH NEW 2-1/2" 20GA GALV. STEEL STUDS AT 16" O.C. HELD OFF INTERIOR FACE OF EXISTING WALL 6", WITH 5/8" TYPE 'X' GYPSUM BOARD, AND 3" UNFACED BATT INSULATION ALL STUD SPACES, FULL HEIGHT OF WALL. WALL SHALL EXTEND FROM SLAB TO 8" ABOVE FINISH CEILING. BRACE STUDS TO EXTERIOR WALL. SEE FINISH SCHEDULE. PROVIDE NEW 2-1/2" 20GA GALV. STEEL STUDS AT 16" O.C. FROM TOP OF EXISTING CMU WALL TO UNDERSIDE OF EXISTING ROOF INSULATION, OUTSIDE FACE OF STUDS PASSING INSIDE EDGE OF EXISTING STEEL "Z" PURLIN. SHEATH STUDS WITH 5/8" THICK TYPE 'X' EXTERIOR GYPSUM SHEATHING BOARD, CONTINUOUS, AT INSIDE FACE OF STUDS, ALL JOINTS TAPED. PROVIDE NEW CLOSED CELL SPRAY URETHANE FOAM FROM TOP OF EXISTING CMU TO UNDERSIDE OF EXISTING VINYL-FACED BATT INSULATION, FROM GYPSUM BOARD TO INSIDE FACE OF CMU. TRIM EXCESS SPRAY URETHANE FOAM FLUSH WITH INSIDE FACE OF CMU, TYPICAL ENTIRE LENGTH OF ALL EXTERIOR WALLS. SEE DETAIL 4/A-602.

W11 EXISTING ONE-HOUR FIRE RATED WALL CONSTRUCTION TO REMAIN. PROVIDE NEW TWO LAYERS OF 5/8" THICK TYPE 'X' GYPSUM BOARD OVER EXISTING GYPSUM BOARD, ALL JOINTS STAGGERED BETWEEN LAYERS, AND ALL JOINTS TAPED AND SEALED. PROVIDE NEW 2-1/2" 20GA GALV. STEEL STUDS AT 16" O.C. HELD OFF INTERIOR FACE OF NEW TWO LAYERS OF GYPSUM BOARD 1-1/2", WITH 5/8" TYPE 'X' GYPSUM BOARD, AND 3" UNFACED BATT INSULATION ALL STUD SPACES, FULL HEIGHT OF WALL. WALL SHALL EXTEND FROM SLAB TO UNDERSIDE OF EXISTING ROOF DECK. SEAL ALL THROUGH-WALL PENETRATIONS IN EXISTING WALL SYSTEM, AND NEW WALL SYSTEM, WITH ONE-HOUR FIRE RATED CAULKING SYSTEM, TYPICAL. PROVIDE CONTINUOUS BEAD OF SYSTEM, TYPICAL. PROVIDE ANOTHER WALL OF 2-1/2" 20GA GALV. STEEL STUDS AT 16" O.C. HELD OFF INTERIOR FACE OF NEW INNER WALL 1-1/2", WITH 5/8" TYPE 'X' GYPSUM BOARD, AND 3" UNFACED BATT INSULATION ALL STUD SPACES, FULL HEIGHT OF WALL. WALL SHALL EXTEND FROM SLAB TO 8" ABOVE FINISH CEILING. OVERALL WALL ASSEMBLY (EXISTING PLUS NEW) SHALL BE 2-HOUR.

W12 NEW WALL INFILL, CONSISTING OF NEW 8" CMU W/ INSIDE FACE FLUSH WITH FACE OF EXISTING CMU, NEW EXTERIOR INSULATION AND FINISH SYSTEM TO MATCH EXISTING ON OUTSIDE FACE, THICKNESS TO FLUSH OUT WITH TOP SURFACE OF EXISTING WINDOW STOOL. INTERIOR SHALL BE NEW 2-1/2" 20GA GALV. STEEL STUDS AT 16" O.C. HELD OFF INTERIOR FACE OF EXISTING WALL 1-1/2", WITH 5/8" TYPE 'X' GYPSUM BOARD, AND 3" UNFACED BATT INSULATION ALL STUD SPACES, FULL HEIGHT OF WALL. WALL SHALL EXTEND FROM SLAB TO 8" ABOVE FINISH CEILING. BRACE STUDS TO EXTERIOR WALL. SEE FINISH SCHEDULE AND DETAIL 5/A-602.

NOTE:

PROVIDE SOLID BLOCKING IN STUD WALLS FOR SUPPORT OF ALL WALL-MOUNTED ITEMS.

GRAPHIC SCALE 0' 1' 5' 10'

DO NOT SCALE DRAWINGS

100% SUBMITTAL

STATE OF FLORIDA
PHILIP D. MORGAN
01/16/2018
AR0014409
REGISTERED ARCHITECT

REV. #	DATE	DESCRIPTION

REPAIR BUILDING 90748, 23 SOWS

WALL TYPE PLAN

AIR FORCE SPECIAL OPERATIONS COMMAND

1 SPECIAL OPERATIONS CIVIL ENGINEER SQUADRON

HURLBURT FIELD, FLORIDA

DATE: 16 JAN 2018
DESIGNED BY: PDM
DRAWN BY: JE FULLER
BUILDING NUMBER: 90748
PROJECT NUMBER: FTEV 16-3001
SHEET REFERENCE: A-103
SHEET NUMBER: 6 of 48

SIGNAGE SCHEDULE

MARK	QTY.	SIGN TYPE	DESCRIPTION
1	1	A	102 MEN; HANDICAP SYMBOL
2	1	B	106 WOMEN; HANDICAP SYMBOL
3	1	C	103 JANITOR
4	1	D	DIE-CUT VINYL SIGN/LOGO GOVERNMENT-FURNISHED/GOVERNMENT-INSTALLED
5	2	C	113 CONFERENCE/TRAINING
6	1	E	104 BREAK
7	1	C	114 STANEVAL
8	1	C	115 TEAM ROOM
9	1	C	116 NCOIC
10	1	C	117 OIC
11	1	C	118 WXT
12	1	C	119 OPS FLOOR
13	1	C	112 DO
14	1	C	111 COMMANDER
15	1	C	110 1ST SGT
16	1	C	109 SEM
17	2	F	"EMERGENCY EXIT ONLY" - MOUNT ON FACE OF DOOR. ONE SIGN EXTERIOR GRADE.
18	1	E	120 MECHANICAL ROOM - EXTERIOR GRADE

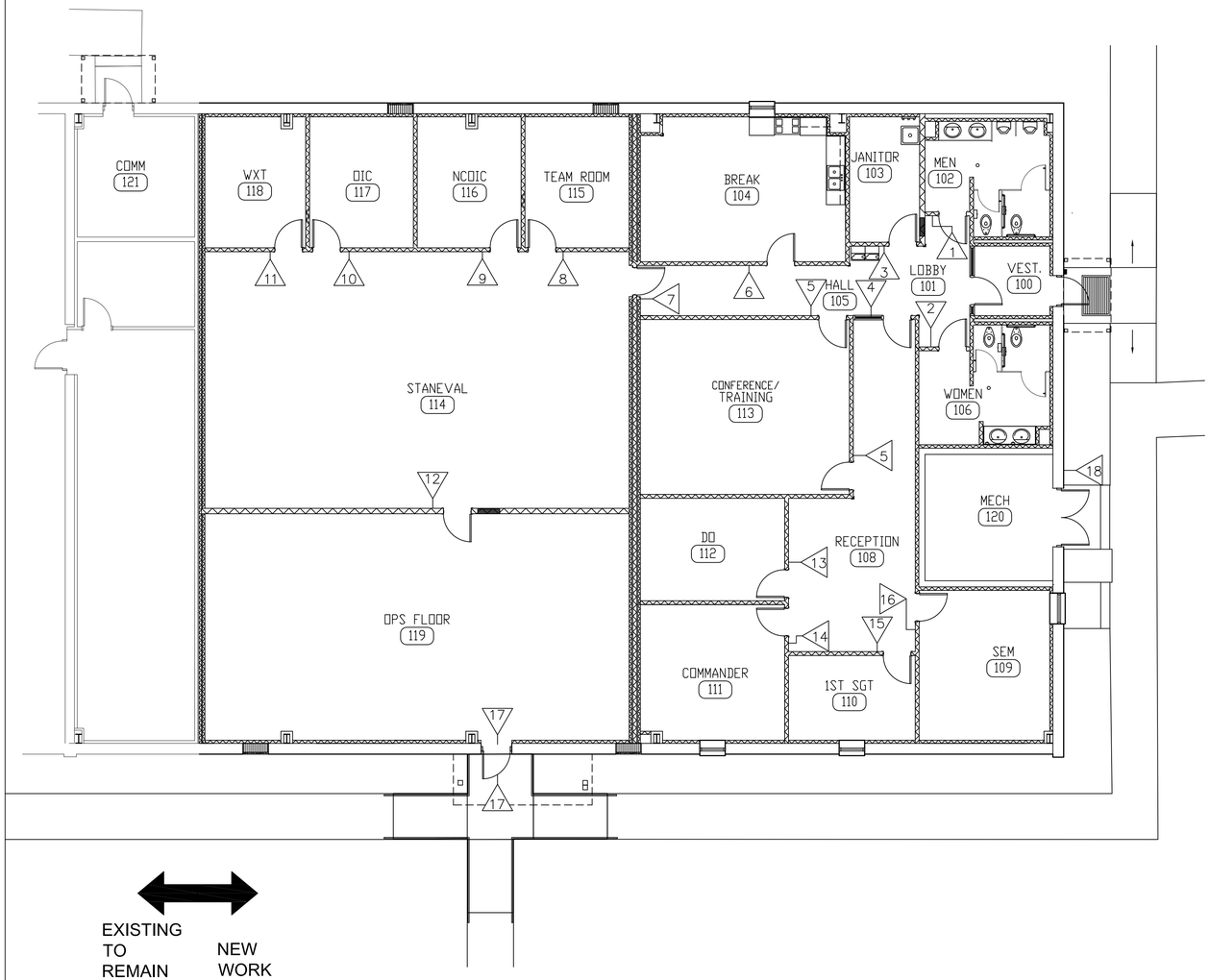

EXISTING TO REMAIN

NEW WORK

NORTH

SIGNAGE PLAN

SCALE: 1/8" = 1'-0"

SIGNAGE NOTES

SIGNAGE SHALL COMPLY WITH DoD UNIFIED FACILITIES CRITERIA UFC 3-120-01 AIR FORCE SIGN STANDARD AND ABA STANDARDS CHAPTER 703.

MOUNT @ 5'-0" ABOVE FINISHED FLOOR TO BASE OF LETTERS, TYPICAL.

LETTERS AND NUMERALS SHALL BE RAISED 1/32", HELVETICA NEUE 55 ROMAN.

COLORS: BACKGROUND FIELD - PER HURLBURT STANDARDS
LETTERS, NUMBERS & SYMBOLS - PER HURLBURT STANDARDS

LETTERS AND NUMBERS SHALL HAVE A WIDTH-TO-HEIGHT RATIO OF BETWEEN 3:5 AND 1:1, AND A STROKE-WIDTH-TO-HEIGHT RATIO BETWEEN 1:5 AND 1:10. LETTER STYLE SHALL BE HELVETICA NEUE 55 ROMAN.

VERIFY ALL ROOM NUMBERS AND VERBIAGE WITH CONTRACTING OFFICER PRIOR TO FABRICATION.

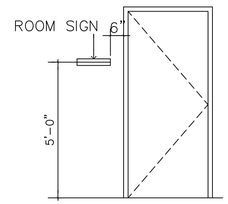

WALL MOUNT

SIGN TYPES

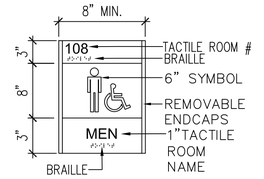

SIGN `A'

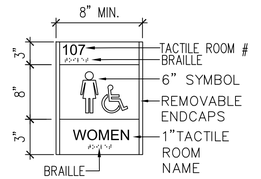

SIGN `B'

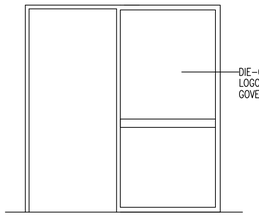

SIGN `D'

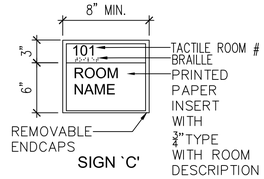

SIGN `C'

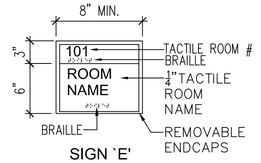

SIGN `E'

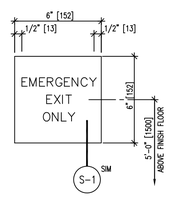

NOTE: TYPOGRAPHY- UPPER CASE OPTIMA MEDIUM, 5/8" [16] CAPITAL LETTER HEIGHT, CENTERED. MESSAGE LINE WILL ACCOMODATE 7 TILES OR CHARACTERS MAXIMUM.
SYMBOL- WHITE SYMBOL ON DARK BACKGROUND (SEE SPECIFICATIONS SECTION 09915).

SIGN `F'

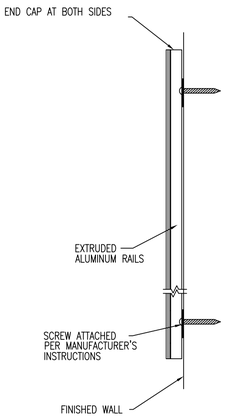

SIGN DETAIL S-1

DO NOT SCALE DRAWINGS

100% SUBMITTAL

GRAPHIC SCALE 0' 1' 5' 10'

STATE OF FLORIDA
PHILLIP B. MORGAN
01/16/2018
AR0014409
REGISTERED ARCHITECT

REV #	DATE	DESCRIPTION

REPAIR BUILDING 90748, 23 SOWS

SIGNAGE PLAN

AIR FORCE SPECIAL OPERATIONS COMMAND
1 SPECIAL OPERATIONS CIVIL ENGINEER SQUADRON
HURLBURT FIELD, FLORIDA

DATE: 16 JAN 2018
DESIGNED BY: PDM
DRAWN BY: JE FULLER
BUILDING NUMBER: 90748
PROJECT NUMBER: FTEV 16-3001
SHEET REFERENCE: A-104
SHEET NUMBER: 7 of 48

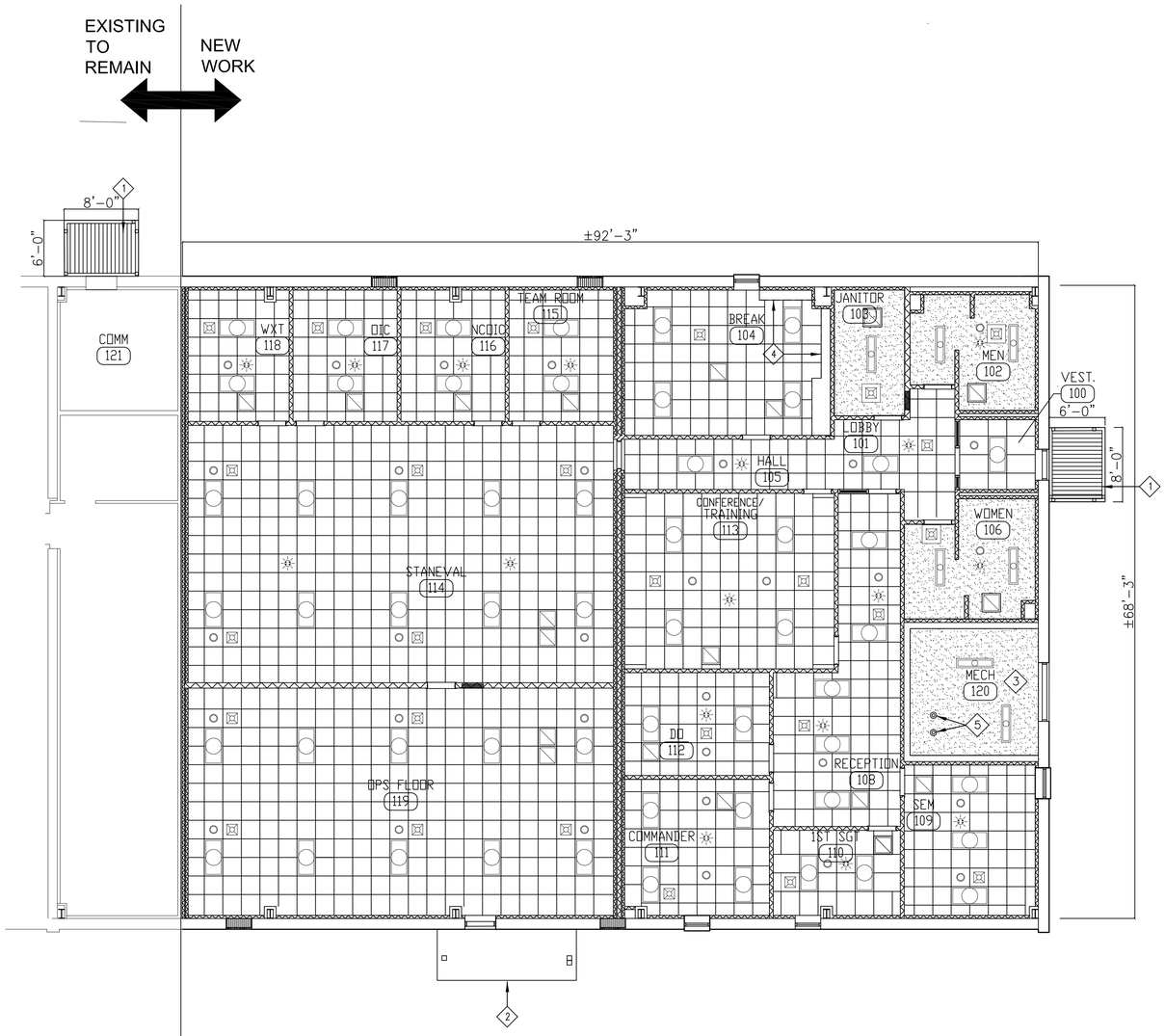

NORTH

REFLECTED CEILING PLAN

SCALE: 1/8" = 1'-0"

LEGEND:

- EXISTING TO REMAIN, TYPICAL. PROTECT FROM DAMAGE DURING EXTENT OF WORK.
- NEW WALL CONSTRUCTION. SEE WALL TYPES PLAN, TYPICAL.
- NEW 2'X2' LAY-IN ACOUSTICAL CEILING TILE AND GRID SYSTEM, TYPICAL. SEE SPECIFICATIONS AND FINISH SCHEDULE. PROVIDE 2'X4' TILE IN SPACES WHERE LAYOUT DOES NOT PERMIT AT LEAST A HALF 2'X2' TILE. ALL SPRINKLER HEADS, ELECTRICAL FIXTURES, AND MECHANICAL GRILLES/DIFFUSERS SHALL BE CENTERED WITHIN CEILING TILE, UNLESS NOTED OTHERWISE. TYPICAL.
- NEW 5/8" THICK TYPE 'X' MOLD & MOISTURE-RESISTANT GYPSUM BOARD ON 20GA 3-5/8" GALV. STEEL STUDS AT 16" O.C. TYPICAL. SEE SPECIFICATIONS AND FINISH SCHEDULE.
- NEW 2'X4' LAY-IN LIGHT FIXTURE. SEE ELECTRICAL DOCUMENTS. TYPICAL.
- NEW 1'X4' RECESSED OR PENDANT-MOUNTED LIGHT FIXTURE. SEE ELECTRICAL DOCUMENTS. TYPICAL.
- NEW RECESSED EMERGENCY LIGHT FIXTURE. SEE ELECTRICAL DOCUMENTS. TYPICAL.
- NEW OCCUPANCY SENSOR. SEE ELECTRICAL DOCUMENTS. TYPICAL.
- NEW LAY-IN SUPPLY AIR DIFFUSER. SEE MECHANICAL DOCUMENTS. TYPICAL.
- NEW LAY-IN/RECESSED RETURN AIR GRILLE. SEE MECHANICAL DOCUMENTS. TYPICAL.

KEYNOTES:

1. NEW PRE-ENGINEERED, PRE-FINISHED ALUMINUM CANOPY SYSTEM, COMPLETE WITH BUILT-IN GUTTER AND DOWNSPOUT SYSTEM. SEE DETAIL 3/A-603.
2. EXISTING METAL CANOPY SYSTEM TO REMAIN, TYPICAL. PROTECT FROM DAMAGE DURING EXTENT OF WORK.
3. PROVIDE 2 LAYERS OF 5/8" TYPE 'X' GYPSUM BOARD, ALL JOINTS BETWEEN LAYERS OFFSET. PAINT.
4. NEW WALL-MOUNTED CABINETS FLUSH WITH CEILING.
5. NEW BOILER EXHAUST FLUE AND FRESH AIR INTAKE PIPE THROUGH CEILING AND UP THROUGH ROOF. PROVIDE 2-HOUR FIRE RATED SEALANT AROUND ALL PENETRATIONS. PROVIDE ESCUTCHEONS AT CEILING PIPE PENETRATIONS.

GENERAL NOTES:

1. FIELD VERIFY EXISTING CONDITIONS PRIOR TO START OF WORK. VERIFY ABOVE-CEILING CONDITIONS TO REMAIN AND COORDINATE WITH NEW ABOVE CEILING WORK PRIOR TO START OF WORK.
2. REFER TO FIRE SUPPRESSION, PLUMBING, MECHANICAL AND ELECTRICAL DRAWINGS FOR EXTENT OF NEW WORK.
3. CONTRACTOR TO REPLACE OR REPAIR ALL FINISHES DAMAGED DURING THE EXTENT OF WORK, TO MATCH EXISTING.
4. PROVIDE ACCESS PANELS IN GYPSUM BOARD CEILINGS AT LOCATIONS REQUIRING MAINTENANCE ACCESS TO PLUMBING, MECHANICAL, AND ELECTRICAL COMPONENTS. COORDINATE WITH PLUMBING, MECHANICAL, AND ELECTRICAL DOCUMENTS.
5. PROVIDE 2'x4' ACOUSTICAL CEILING TILE IN ROOMS WHERE LAYOUT DOES NOT PERMIT AT LEAST A HALF 2'x2' TILE.
6. ALL FIRE PROTECTION HEADS, ELECTRICAL FIXTURES, AND MECHANICAL VENTS SHALL BE CENTERED WITHIN CEILING TILES, UNLESS NOTED OTHERWISE.

GRAPHIC SCALE 0' 1' 5' 10'

DO NOT SCALE DRAWINGS

100% SUBMITTAL

STATE OF FLORIDA PHILIP B. MORGAN 01/16/2018 AR0014409 REGISTERED ARCHITECT

REV #	DATE	DESCRIPTION

REPAIR BUILDING 90748, 23 SOWS

REFLECTED CEILING PLAN

AIR FORCE SPECIAL OPERATIONS COMMAND
1 SPECIAL OPERATIONS CIVIL ENGINEER SQUADRON
HURLBURT FIELD, FLORIDA

DATE: 16 JAN 2018
DESIGNED BY: PDM
DRAWN BY: JE FULLER
BUILDING NUMBER: 90748
PROJECT NUMBER: FTEV 16-3001
SHEET REFERENCE: A-201
SHEET NUMBER: 8 of 48

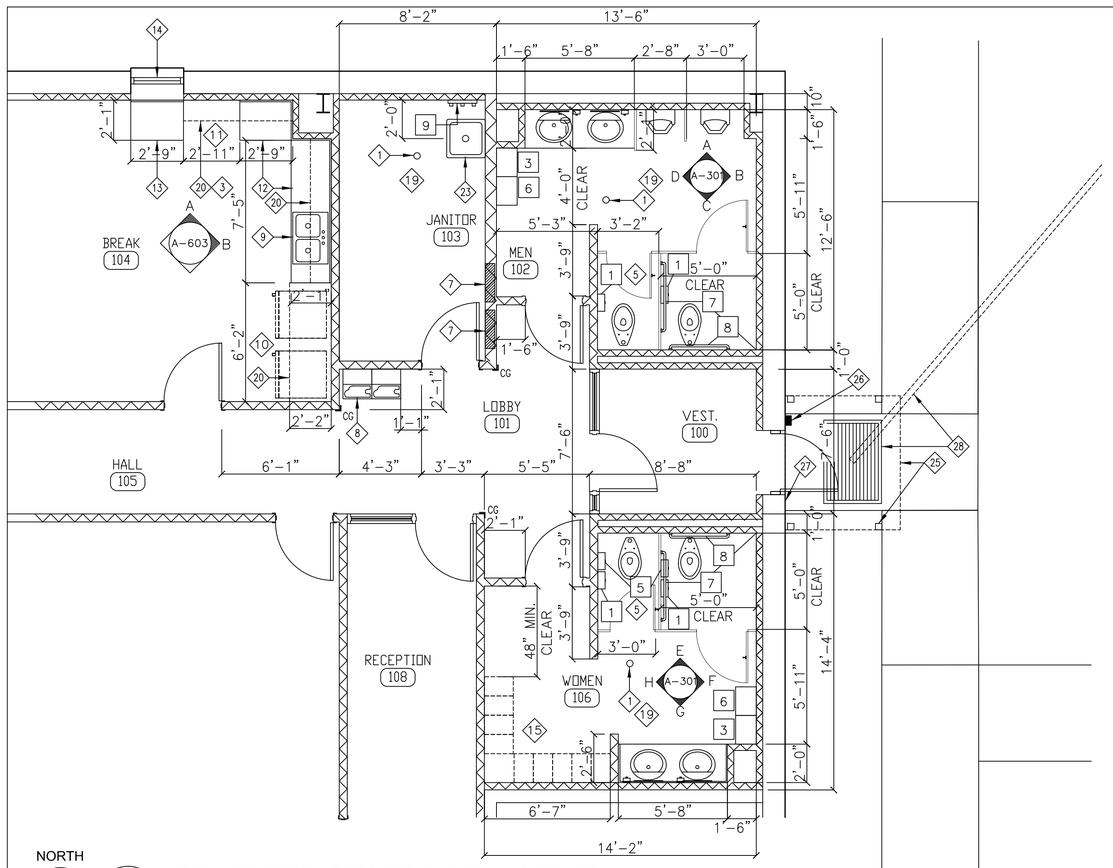

NORTH

1 A101 A301

ENLARGED RESTROOM LAYOUT

SCALE: 1/4" = 1'-0"

TOILET ACCESSORY SCHEDULE (BASED ON BOBRICK PRODUCTS UNLESS NOTED OTHERWISE)

TAG	ITEM	MODEL #	MOUNTING HEIGHT	REMARKS
1	TOILET TISSUE DISPENSER	B-2890	19" A.F.F. TO ℄	JUMBO ROLL. INSTALL 7"-9" IN FRONT OF TOILET BOWL
2	SOAP DISPENSER	B-2111	48" A.F.F. TO ℄	BLOCKING PER MANUFACTURER INSTRUCTIONS
3	PAPER TOWEL DISPENSER	B-72860	48" A.F.F. TO ℄	BLOCKING PER MANUFACTURER INSTRUCTIONS
4	MIRROR 18"X36"	B-290	40" A.F.F. MAX	40" A.F.F. MAX TO VIEWING SURFACE- FULL HEIGHT ABOVE COUNTER SPLASH
5	SANITARY NAPKIN DISPOSAL	B-270	19" A.F.F. TO ℄	
6	PAPER TOWEL RECEPTACLE	B-3644	42" A.F.F. TO TOP	RECESS MOUNTED, 18 GALLON CAPACITY
7	GRAB BAR 42"	6806 X 42	36" A.F.F. TO ℄	BLOCKING PER MANUFACTURER INSTRUCTIONS
8	GRAB BAR 36"	6806 X 36	36" A.F.F. TO ℄	BLOCKING PER MANUFACTURER INSTRUCTIONS
9	MOP HOLDER	B-223-24"	60" A.F.F. TO ℄	BLOCKING PER MANUFACTURER INSTRUCTIONS

NOTE: BLOCKING OF SUPPORT PLATE TO BE PROVIDED FOR ALL ACCESSORIES.
NOTE: COORDINATE REQUIRED MIRROR VIEWING SURFACE HEIGHT ABOVE FINISHED FLOOR (40" MAX) WITH PLUMBING FIXTURES.

LEGEND:

EXISTING TO REMAIN, TYPICAL. PROTECT FROM DAMAGE DURING EXTENT OF WORK.

NEW WALL CONSTRUCTION, TYPICAL. SEE WALL TYPES, SHEET A-103.

KEYNOTES:

1. FLOOR DRAIN. SEE PLUMBING DOCUMENTS.
2. WALL HUNG URINAL SCREEN. SEE SPECIFICATIONS.
3. NEW WALL-MOUNTED RANGE HOOD. SEE MECHANICAL AND ELECTRICAL DOCUMENTS.
4. HANDICAP TOILET STALL. SEE SPECIFICATIONS.
5. STANDARD TOILET STALL. SEE SPECIFICATIONS.
6. SOLID SURFACE COUNTERTOP WITH INTEGRAL BOWLS AND SIDDE AND BACK SPLASHES. SEE PLUMBING DOCUMENTS AND SPECIFICATIONS.
7. ELECTRICAL PANEL. SEE ELECTRICAL DOCUMENTS.
8. HI-LO HANDICAP ACCESSIBLE DRINKING FOUNTAIN. SEE PLUMBING DOCUMENTS.
9. TWO-COMPARTMENT STAINLESS STEEL SINK W/ GARBAGE DISPOSAL. SEE PLUMBING DOCUMENTS.
10. SPACE FOR TWO (2) GOVERNMENT-FURNISHED/GOVERNMENT-INSTALLED REFRIGERATORS. VERIFY CLEARANCE WITH GOVERNMENT. SEE PLUMBING FOR WATER CONNECTIONS.
11. SPACE FOR GOVERNMENT-FURNISHED/GOVERNMENT-INSTALLED RESIDENTIAL OVEN/STOVE UNIT. VERIFY CLEARANCE WITH GOVERNMENT. SEE MECHANICAL DOCUMENTS FOR RANGE HOOD.
12. PLASTIC LAMINATE-CLAD BASE AND WALL CABINETS, WITH SOLID SURFACE COUNTERTOP, BACK AND SIDE SPLASHES, ADJUSTABLE SHELVES, DRAWERS, AND ALL REQUIRED HARDWARE. SEE SPECIFICATIONS.
13. PLASTIC LAMINATE-CLAD BASE CABINETS, WITH SOLID SURFACE COUNTERTOP, BACK SPLASH, ADJUSTABLE SHELVES, DRAWERS, AND ALL REQUIRED HARDWARE. SEE SPECIFICATIONS.
14. EXISTING WINDOW TO REMAIN. PROTECT FROM DAMAGE DURING EXTENT OF WORK. PROVIDE NEW WINDOW BLINDS AND SOLID SURFACE STOOL. SEE FINISH SCHEDULE & SPECS.
15. GOVERNMENT-FURNISHED/GOVERNMENT-INSTALLED LOCKERS.
16. CERAMIC TILE WAINSCOT WITH ACCENT BAND, TYPICAL. SEE FINISH SCHEDULE.
17. PAINTED GYPSUM BOARD. SEE WALL TYPES, SHEET A-101, AND FINISH SCHEDULE.
18. SOLID CORE WOOD DOOR AND GHM FRAME. SEE DOOR AND FINISH SCHEDULES.
19. SLOPE SLAB TO DRAIN, TYPICAL.
20. LINE OF WALL-MOUNTED CABINETS, ABOVE, TYPICAL.
21. PROVIDE INSULATED PIPE AT ALL EXPOSED PIPING. SEE PLUMBING DOCUMENTS.
22. PLASTIC LAMINATE-CLAD SUPPORT BRACKET, TYPICAL.
23. UTILITY SINK. SEE PLUMBING DOCUMENTS.
24. PRIVACY SCREEN. SEE SPECIFICATIONS AND FINISH SCHEDULE.
25. NEW PRE-ENGINEERED, PRE-FINISHED ALUMINUM CANOPY SYSTEM. SEE DETAIL 3/A-603.
26. NEW KNOX BOX. COORDINATE MODEL AND LOCATION W/ BASE FIRE DEPARTMENT.
27. REPAIR EXISTING EIFS AT DEMOLISHED KEYPAD. MATCH EXISTING EIFS.
28. NEW 3'-0" X 4'-4" RECESS-MOUNTED METAL WALK-OFF GRATE, EQUAL TO MODEL RG-720 BY PAWLING CORPORATION 32 NELSON HILL ROAD, P.O. BOX 200 WASSAIC, NEW YORK 12592 (800-431-3456). PROVIDE 4" DRAIN AND 4" PVC DRAIN PIPE IN BOTTOM OF RECESS. PIPE SHALL BE ROUTED TO NEAREST STORM DRAIN INLET. PROVIDE POSITIVE SLOPE IN PIPE FROM RECESS TO EXISTING STORM INLET. SEE DETAIL 2/A-603.

NOTE:
PROVIDE SOLID BLOCKING IN STUD WALLS FOR SUPPORT OF ALL WALL-MOUNTED ITEMS.

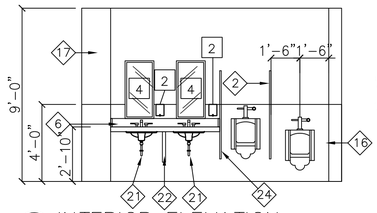

A INTERIOR ELEVATION
SCALE: 1/4" = 1'-0" WEST-MEN 102

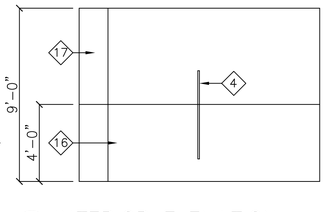

B INTERIOR ELEVATION
SCALE: 1/4" = 1'-0" NORTH-MEN 102

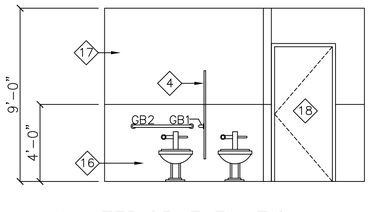

C INTERIOR ELEVATION
SCALE: 1/4" = 1'-0" EAST-MEN 102

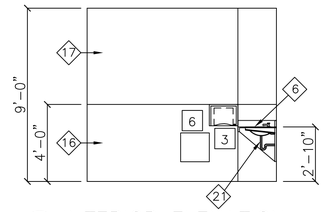

D INTERIOR ELEVATION
SCALE: 1/4" = 1'-0" SOUTH-MEN 102

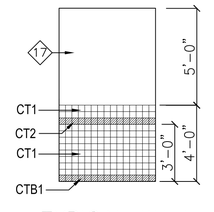

K TYPICAL WALL TILE PATTERN
SCALE: 1/4" = 1'-0"

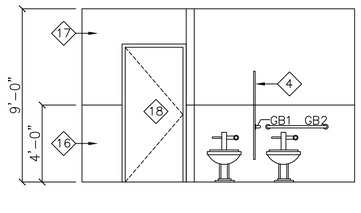

E INTERIOR ELEVATION
SCALE: 1/4" = 1'-0" WEST-WOMEN 106

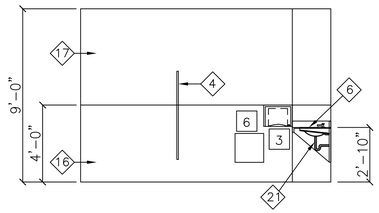

F INTERIOR ELEVATION
SCALE: 1/4" = 1'-0" NORTH-WOMEN 106

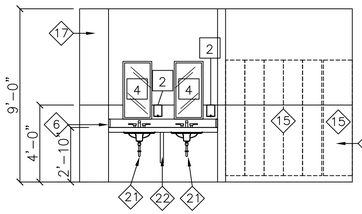

G INTERIOR ELEVATION
SCALE: 1/4" = 1'-0" WEST-WOMEN 106

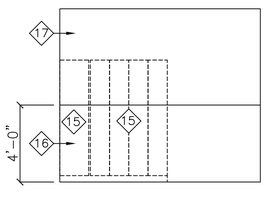

H INTERIOR ELEVATION
SCALE: 1/4" = 1'-0" SOUTH-WOMEN 106

0' 1' 5' 10'
GRAPHIC SCALE

DO NOT SCALE DRAWINGS

100% SUBMITTAL

STATE OF FLORIDA
PHILIP D. MORGAN
01/16/2018
AR0014409
REGISTERED ARCHITECT

REV #	DATE	DESCRIPTION

REPAIR BUILDING 90748, 23 SOWS

ENLARGED PLAN, INTERIOR ELEVATIONS

AIR FORCE SPECIAL OPERATIONS COMMAND
1 SPECIAL OPERATIONS CIVIL ENGINEER SQUADRON
HURLBURT FIELD, FLORIDA

DATE: 16 JAN 2018
DESIGNED BY: PDM
DRAWN BY: JE FULLER
BUILDING NUMBER: 90748
PROJECT NUMBER: FTEV 16-3001
SHEET REFERENCE: A-301
SHEET NUMBER: 9 of 48

ROOM FINISH SCHEDULE

RM #	ROOM NAME	FLOOR		BASE			WAINSCOT			NORTH WALL		EAST WALL		SOUTH WALL		WEST WALL		CEILING			RM #	REMARKS
		MAT.	COLOR	MAT.	COLOR	HT.	MAT.	COLOR	HT.	MAT.	COLOR	MAT.	COLOR	MAT.	COLOR	MAT.	COLOR	MAT.	COLOR	HT.		
100	VESTIBULE	PT	PT1	PTB	PTB1	4"	---	---	--	PGB	P1	PGB	P1	ASF/PGB	P1	PGB	P1	SAP	SAP-1	9'-0"	100	8, 10
101	LOBBY	VCT	VCT-1	RB	RB1	4"	---	---	--	PGB	P1	PGB	P1	PGB	P1	PGB	P1	SAP	SAP-1	9'-0"	101	5, 6, 8
102	MEN	PT	PT2	CTB	CTB1	4"	CT	CT-1,2	4'-0"	CT/PGB	P1/CT-1,2	CT/PGB	P1/CT-1,2	CT/PGB	P1/CT-1,2	CT/PGB	P1/CT-1,2	PGB	P3	9'-0"	102	3, 4, 6
103	JANITOR	VCT	VCT-1	RB	RB1	4"	---	---	--	PGB	P1	PGB	P1	PGB	P1	PGB	P1	PGB	P3	9'-0"	103	6
104	BREAK	VCT	VCT-1	RB	RB1	4"	---	---	--	PGB	P1	PGB	P1	PGB	P1	PGB	P1	SAP	SAP-1	9'-0"	104	2, 5, 6, 8, 9
105	HALL	VCT	VCT-1	RB	RB1	4"	---	---	--	PGB	P1	PGB	P1	PGB	P1	PGB	P1	SAP	SAP-1	9'-0"	105	6, 8
106	WOMEN	PT	PT2	CTB	CTB1	4"	CT	CT-1,2	4'-0"	CT/PGB	P1/CT-1,2	CT/PGB	P1/CT-1,2	CT/PGB	P1/CT-1,2	CT/PGB	P1/CT-1,2	PGB	P3	9'-0"	106	3, 4, 6
107	N O T U S E D																					
108	RECEPTION	MCT	MCT1	RB	RB1	4"				PGB	P2	PGB	P2	PGB	P2	ASF/PGB	P2	SAP	SAP-1	9'-0"	108	5, 8
109	SEM	MCT	MCT1	RB	RB1	4"	---	---	--	PGB	P2	PGB	P2	PGB	P2	PGB	P2	SAP	SAP-1	9'-0"	109	1, 8, 9
110	1ST SGT	MCT	MCT1	RB	RB1	4"	---	---	--	PGB	P2	PGB	P2	PGB	P2	PGB	P2	SAP	SAP-1	9'-0"	110	1, 8, 9
111	COMMANDER	MCT	MCT1	RB	RB1	4"	---	---	--	PGB	P2	PGB	P2	PGB	P2	PGB	P2	SAP	SAP-1	9'-0"	111	1, 8, 9
112	DO	MCT	MCT1	RB	RB1	4"	---	---	--	PGB	P2	PGB	P2	PGB	P2	PGB	P2	SAP	SAP-1	9'-0"	112	6, 8
113	CONFERENCE/TRAINING	MCT	MCT1	RB	RB1	4"	---	---	--	PGB	P2	PGB	P2	PGB	P2	PGB	P2	SAP	SAP-1	9'-0"	113	6, 8
114	STANEVAL	MCT	MCT1	RB	RB1	4"	---	---	--	PGB	P2	PGB	P2	PGB	P2	PGB	P2	SAP	SAP-1	9'-0"	114	6, 8
115	TEAM ROOM	MCT	MCT1	RB	RB1	4"	---	---	--	PGB	P2	PGB	P2	PGB	P2	PGB	P2	SAP	SAP-1	9'-0"	115	6, 8
116	NCOIC	MCT	MCT1	RB	RB1	4"	---	---	--	PGB	P2	PGB	P2	PGB	P2	PGB	P2	SAP	SAP-1	9'-0"	116	6, 8
117	OIC	MCT	MCT1	RB	RB1	4"	---	---	--	PGB	P2	PGB	P2	PGB	P2	PGB	P2	SAP	SAP-1	9'-0"	117	6, 8
118	WXT	MCT	MCT1	RB	RB1	4"	---	---	--	PGB	P2	PGB	P2	PGB	P2	PGB	P2	SAP	SAP-1	9'-0"	118	6, 8
119	OPS FLOOR	MCT	MCT1	RB	RB1	4"	---	---	--	PGB	P2	PGB	P2	PGB	P2	PGB	P2	SAP	SAP-1	9'-0"	119	6, 7, 8, 11
120	MECH	ETR	———	ETR	———	———	---	---	--	ETR	———	ETR	———	ETR	———	ETR	———	PGB	P3	9'-0"	120	7, 11
121	COMM	ETR	———	ETR	———	———	---	---	--	ETR	———	ETR	———	ETR	———	ETR	———	ETR	———	ETR	121	

COLOR SCHEDULE

SYMBOL	MATERIAL	MANUFACTURER	COLOR AND SIZE
PT1	PORCELAIN FLOOR TILE	AMERICAN OLEAN	SHADOW BAY SERIES; COLOR SH51 BEACH SAND; SIZE 12"X12"
PTB1	PORCELAIN TILE BASE	AMERICAN OLEAN	MATCH PT1 (4"X12") CUT FLOOR TILE FOR BASE. ALIGN JOINTS.
PT2	PORCELAIN TILE	AMERICAN OLEAN	UNGLAZED COLORBODY PORCELAIN MOSAIC SERIES; COLOR A89 COCOA; SIZE 2"X2"
GROUT 1	FLOOR GROUT	CUSTOM BUILDING PRODUCTS	SANDED GROUT; COLOR #145 LIGHT SMOKE
CT1	CERAMIC WALL TILE	AMERICAN OLEAN	WALL TILE; MATTE SERIES; COLOR #0095 SNOW MIST; SIZE 4"X4"
CT2	CERAMIC WALL TILE	AMERICAN OLEAN	WALL TILE; BRIGHT SERIES; COLOR #0012 GLOSS ALMOND; SIZE 4"X4"
CTB1	CERAMIC WALL TILE BASE	AMERICAN OLEAN	WALL BASE; MATTE SERIES; PART #A3401; COLOR #0095 SNOW MIST; SIZE 4"X4"
GROUT 2	WALL GROUT	CUSTOM BUILDING PRODUCTS	UNSANDED GROUT; COLOR #11 SNOW WHITE
MCT1	MODULAR CARPET TILE	TANDUS CENTIVA	STYLE: CRAYON 01957; COLOR: PRECIOUS METAL #48010: SIZE 24"X24"; INSTALLATION: MONOLITHIC
RB1	RUBBER WALL BASE	JOHNSONITE	4"X1/8" COVE BASE; COLOR: 32 PEBBLE
VCT1	VINYL COMPOSITION TILE	ARMSTRONG	EXCELON IMPERIAL TEXTURE SERIES; COLOR #51901 TAUPE; SIZE 12"X12"
P1	WALL PAINT	SHERWIN WILLIAMS	COLOR: PACER WHITE SW6098
P2	WALL PAINT	SHERWIN WILLIAMS	COLOR: SOFTER TAN SW6141
P3	CEILING	SHERWIN WILLIAMS	COLOR: CEILING BRIGHT WHITE SW7007
P4	DOOR FRAMES PAINT	SHERWIN WILLIAMS	COLOR: BASKET BEIGE SW6143
P5	EXTERIOR DOORS (EXTERIOR SIDE)	SHERWIN WILLIAMS	COLOR: ENDURING BRONZE SW7055
ST1	DOOR STAIN	SHERWIN WILLIAMS	WOOD CLASSICS SERIES; COLOR SW3131 WINTER WHITE
PL1	PLASTIC LAMINATE	WILSONART	COLOR: 7943K-07 COLUMBIAN WALNUT
SS1	SOLID SURFACE	CORIAN	COLOR: TUMBLEWEED
CG	CORNER GUARD	INPRO CORPORATION	160BN BLUNOSE HIGH IMPACT CORNER GUARD: 2" WING: FULL HEIGHT: COLOR: 513 KHAKI BROWN
SAP	SUSPENDED ACOUSTICAL PANEL CEILING SYSTEM	ARMSTRONG	MESA SQUARE LAY-IN AND TEGULAR TILE; ITEM #680; SIZE 24"X24"; COLOR WHITE
TP	FLOOR MOUNTED, HEAD RAIL BRACED TOILET PARTITION	AMPCO	PHENOLIC CORE SERIES; HIGH PRESSURE LAMINATE COLOR #858-58 PUMICE
EWG	EXTERIOR WALK-OFF GRATING	PAWLING CORPORATION	MODEL RG-720 MILL FINISH.

NOTE:
MANUFACTURER'S LISTED ARE INTENDED ONLY FOR BASIS OF DESIGN. NAMED PRODUCTS ARE ACCEPTABLE FOR USE ONLY WHEN THEY CONFORM TO SPECIFIC REQUIREMENTS. PRODUCTS OF OTHER MANUFACTURERS ARE ACCEPTABLE IF THE COLORS APPROXIMATE COLORS INDICATED AND THE PRODUCT CONFORMS TO SPECIFIC REQUIREMENTS.

FINISH REMARKS:

1. PROVIDE SOLID SURFACE (SS1) SILLS AT ALL NEW WINDOWS.
2. ALL COUNTER TOPS SHALL RECEIVE SS1. ALL UPPER AND BASE CABINETS SHALL RECEIVE PL1 UNLESS OTHERWISE NOTED.
3. IN RESTROOMS PROVIDE CERAMIC TILE TO 4'-0" A.F.F., PAINT ABOVE. SEE SHEET A-301 FOR WALL TILE PATTERN AND DESCRIPTION. PROVIDE SINGLE BULLNOSE, INSIDE AND OUTSIDE CORNER TRIM.
4. PROVIDE SOLID SURFACE COUNTERTOP WITH INTEGRAL 4" BACKSPLASH. SUPPORT BRACKETS SHALL BE PLASTIC LAMINATE-CLAD.
5. PROVIDE INTEGRAL COLOR IMPACT-RESISTANT CORNER GUARDS FROM FLOOR TO CEILING AT ALL OUTSIDE GYPSUM BOARD CORNERS. SEE COLOR SCHEDULE.
6. STAIN SOLID CORE WOOD DOORS. SEE COLOR SCHEDULE AND SPECIFICATIONS.
7. PAINT HOLLOW METAL DOOR FRAMES. SEE COLOR SCHEDULE AND SPECIFICATIONS.
8. ALL CEILING MOUNTED DEVICES SHALL BE CENTERED IN CEILING PANEL.
9. PROVIDE HORIZONTAL MINI-BLINDS AT WINDOWS.
10. PROVIDE RECESSED ENTRANCE WALK-OFF GRATING AT EXTERIOR STOOP. SEE DETAIL 2/A-603.
11. PAINT EXTERIOR SIDE OF EXTERIOR HOLLOW METAL DOORS. SEE COLOR SCHEDULE.

FINISH LEGEND:

ASF	ALUMINUM STOREFRONT
CG	CORNER GUARD
CT	CERAMIC TILE
ETR	EXISTING TO REMAIN
MCT	MODULAR CARPET TILE
P	PAINT
PGB	PAINTED GYPSUM BOARD
PL	PLASTIC LAMINATE
PT	PORCELAIN TILE
RB	RUBBER BASE
SAP	SUSPENDED ACOUSTICAL PANEL
SS	SOLID SURFACE
TP	TOILET PARTITION
VCT	VINYL COMPOSITION TILE

STATE OF FLORIDA
PHILIP D. MORGAN
01/16/2018
AR0014409
REGISTERED ARCHITECT

100% SUBMITTAL

REV. # | DATE | DESCRIPTION

REPAIR BUILDING 90748, 23 SOWS

FINISH AND COLOR SCHEDULES

AIR FORCE SPECIAL OPERATIONS COMMAND
1 SPECIAL OPERATIONS CIVIL ENGINEER SQUADRON
HURLBURT FIELD, FLORIDA

DATE: 16 JAN 2018
DESIGNED BY: PDM
DRAWN BY: JE FULLER
BUILDING NUMBER: 90748
PROJECT NUMBER: FTEV 16-3001
SHEET REFERENCE: A-401
SHEET NUMBER: 10 of 48

DOOR SCHEDULE

NUMBER	TYPE	MATERIAL	SIZE WIDE	SIZE HIGH	SIZE THICK	HEAD DETAIL	JAMB DETAIL	SILL DETAIL	FRAME MATERIAL	FRAME TYPE	FIRE RATING	SOUND RATING FOR TESTED DOOR & FRAME ASSEMBLY	HDWRE SET	ROOM NUMBER	REMARKS	NUMBER
01	A	ALSF	3'-0"	7'-0"	1-3/4"	12/A-601	13/A-601	11/A-601	ALSF	A	———	—	1	100		01
01A	A	ALSF	3'-0"	7'-0"	1-3/4"	5/A-601	6/A-601 6A/A-601	———	ALSF	A	———	—	2	100	3, 6	01A
02	B	SCWD	3'-0"	7'-0"	1-3/4"	1/A-601	2/A-601	———	GHM	C	———	—	3	102		02
03	B	SCWD	3'-0"	7'-0"	1-3/4"	1/A-601	2/A-601	———	GHM	C	———	—	4	103		03
04	D	SCWD	3'-0"	7'-0"	1-3/4"	1/A-601	2/A-601	———	GHM	C		—	5	104	7	04
06	B	SCWD	3'-0"	7'-0"	1-3/4"	1/A-601	2/A-601	———	GHM	C	———	—	3	106		06
08	A	ALSF	3'-0"	7'-0"	1-3/4"	5/A-601	6/A-601 6A/A-601	———	ALSF	B	———	—	2	108	3, 6	08
09	B	SCWD	3'-0"	7'-0"	1-3/4"	1/A-601	2/A-601	14/A-601	GHM	C	———	STC 45	6	109		09
10	B	SCWD	3'-0"	7'-0"	1-3/4"	1/A-601	2/A-601	14/A-601	GHM	C	———	STC 45	6	110		10
11	B	SCWD	3'-0"	7'-0"	1-3/4"	1/A-601	2/A-601	14/A-601	GHM	C	———	STC 45	6	111		11
12	B	SCWD	3'-0"	7'-0"	1-3/4"	1/A-601	2/A-601	14/A-601	GHM	C	———	STC 45	6	112		12
13	B	SCWD	3'-0"	7'-0"	1-3/4"	1/A-601	2/A-601	14/A-601	GHM	C	———	STC 45	6	113		13
13A	B	SCWD	3'-0"	7'-0"	1-3/4"	1/A-601	2/A-601	14/A-601	GHM	C	———	STC 45	6	113		13A
14	B	SCWD	3'-0"	7'-0"	1-3/4"	3/A-601	4/A-601	14/A-601	GHM	C	———	STC 45	6	114		14
15	B	SCWD	3'-0"	7'-0"	1-3/4"	1/A-601	2/A-601	14/A-601	GHM	C	———	STC 45	6	115		15
16	B	SCWD	3'-0"	7'-0"	1-3/4"	1/A-601	2/A-601	14/A-601	GHM	C	———	STC 45	6	116		16
17	B	SCWD	3'-0"	7'-0"	1-3/4"	1/A-601	2/A-601	14/A-601	GHM	C	———	STC 45	6	117		17
18	B	SCWD	3'-0"	7'-0"	1-3/4"	1/A-601	2/A-601	14/A-601	GHM	C	———	STC 45	6	118		18
19	B	SCWD	3'-0"	7'-0"	1-3/4"	1/A-601	2/A-601	14/A-601	GHM	C	———	STC 45	6	119	8	19
19A	C	GHM	3'-0"	7'-0"	1-3/4"	9/A-601	10/A-601	11/A-601	GHM	C	———	STC 45	7	119	1, 2, 4, 5, 8	19A
20	C	GHM	PR 3'-0"	7'-0"	1-3/4"	7/A-601	8/A-601	11/A-601	GHM	C	———	—	8	120	1, 2, 4	20

DOOR REMARKS:

1. DOOR SHALL BE INSULATED.
2. VERIFY EXISTING OPENING SIZE PRIOR TO FABRICATION OF DOOR AND FRAME.
3. PROVIDE CLEAR, INSULATED, TEMPERED GLAZING.
4. DOORS, FRAMES, AND HARDWARE SHALL BE HURRICANE RATED FOR 145MPH.
5. DOOR IS FOR EXIT ONLY. NO EXTERIOR HARDWARE. PROVIDE SIGNAGE ON BOTH SIDES OF DOOR STATING: "EXIT ONLY".
6. ALUMINUM STOREFRONT FRAMING SHALL BE ANODIZED DARK BRONZE.
7. PROVIDE CLEAR, TEMPERED GLAZING.
8. COORDINATE DOOR, FRAME, AND HARDWARE WITH BMS/IDS. SEE ELECTRICAL DOCUMENTS.

LEGEND

ALSF	ALUMINUM STOREFRONT SYSTEM, DARK BRONZE ANODIZED.
ETR	EXISTING TO REMAIN.
F.V.	FIELD-VERIFY.
GHM	GALVANIZED HOLLOW METAL
MPH	MILES PER HOUR.
SCWD	SOLID CORE WOOD.
STC	SOUND TRANSMISSION COEFFICIENT.

KEYNOTES:

1. GOVERNMENT-FURNISHED/GOVERNMENT-INSTALLED DIE-CUT VINYL SIGNAGE/LOGO.
2. PROVIDE CLEAR, INSULATED, TEMPERED GLAZING, TYPICAL.
3. WINDOW FRAMING SYSTEM SHALL MATCH EXISTING WINDOW COLOR.

DOOR TYPES

SCALE: 1/4"=1'-0"

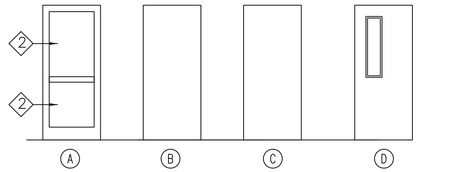

FRAME TYPES

SCALE: 1/4"=1'-0"

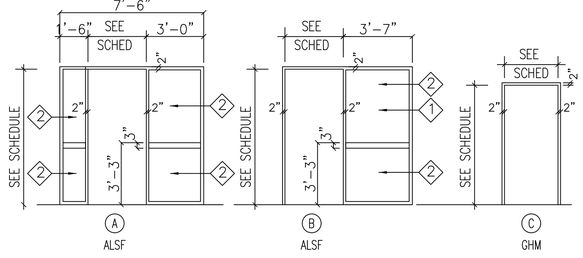

WINDOW TYPES

SCALE: 1/4"=1'-0"

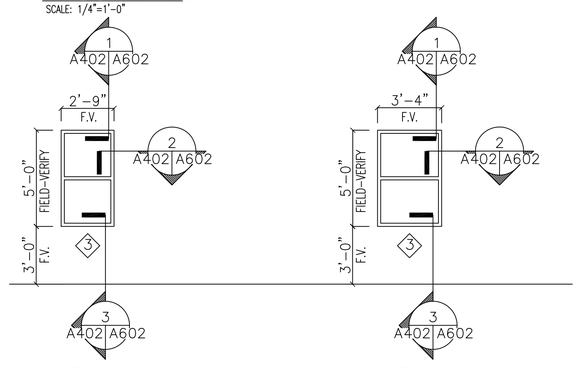

DO NOT SCALE DRAWINGS

GRAPHIC SCALE 1'0' 5'10' 20'

100% SUBMITTAL

STATE OF FLORIDA
PHILIP D. MORGAN
01/16/2018
AR0014409
REGISTERED ARCHITECT

REV #	DATE	DESCRIPTION

REPAIR BUILDING 90748, 23 SOWS

DOOR SCHEDULE, DOOR & WINDOW TYPES

AIR FORCE SPECIAL OPERATIONS COMMAND
1 SPECIAL OPERATIONS CIVIL ENGINEER SQUADRON
HURLBURT FIELD, FLORIDA

DATE: 16 JAN 2018
DESIGNED BY: PDM
DRAWN BY: JE FULLER
BUILDING NUMBER: 90748
PROJECT NUMBER: FTEV 16-3001
SHEET REFERENCE: A-402
SHEET NUMBER: 11 of 48

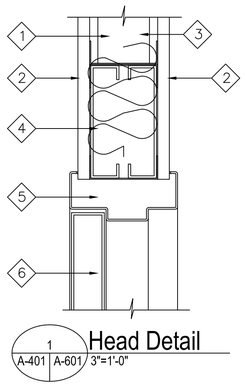

1 A-401 | A-601 — Head Detail 3"=1'-0"

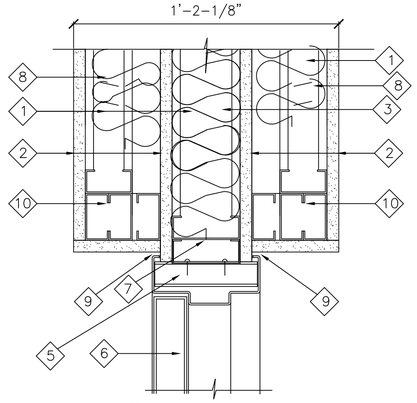

4 A-401 | A-601 — Jamb Detail 3"=1'-0"

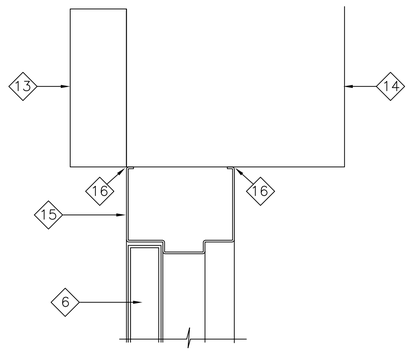

7 A-401 | A-601 — Head Detail 3"=1'-0"

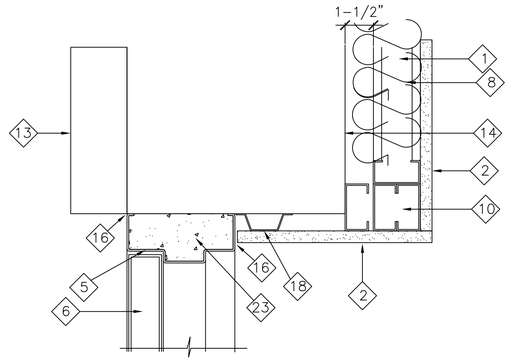

10 A-401 | A-601 — Jamb Detail 3"=1'-0"

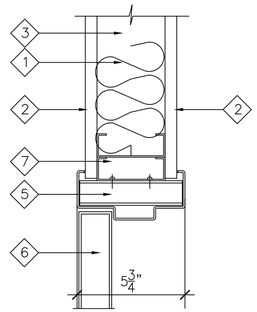

2 A-401 | A-601 — Jamb Detail 3"=1'-0"

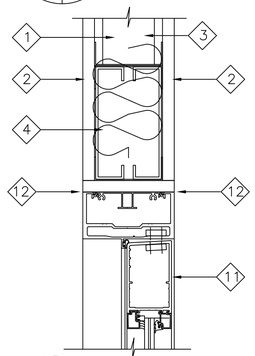

5 A-401 | A-601 — Head Detail 3"=1'-0"

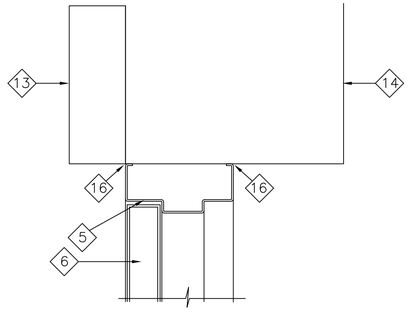

8 A-401 | A-601 — Jamb Detail 3"=1'-0"

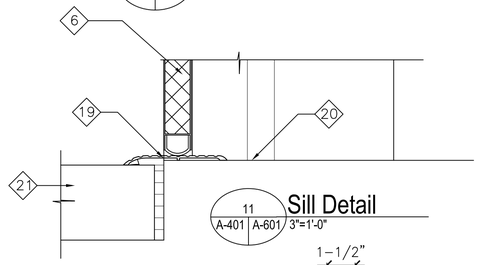

11 A-401 | A-601 — Sill Detail 3"=1'-0"

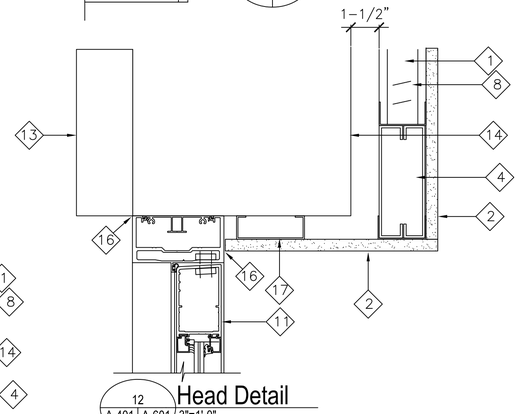

12 A-401 | A-601 — Head Detail 3"=1'-0"

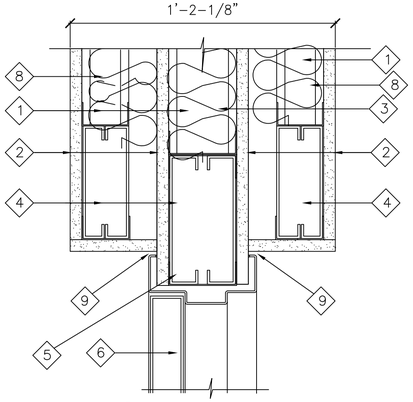

3 A-401 | A-601 — Head Detail 3"=1'-0"

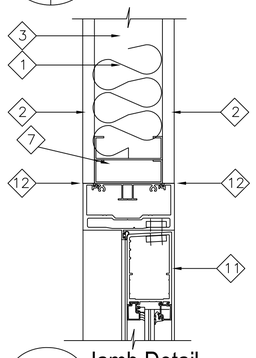

6 A-401 | A-601 — Jamb Detail 3"=1'-0"

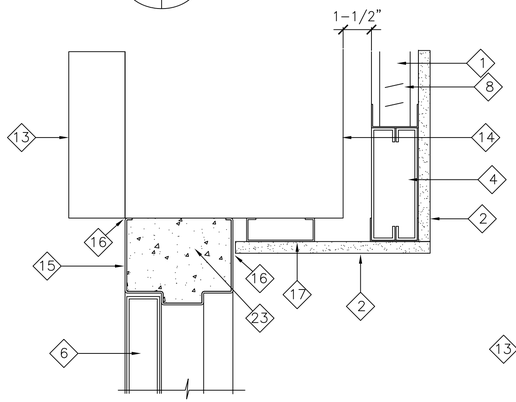

9 A-401 | A-601 — Head Detail 3"=1'-0"

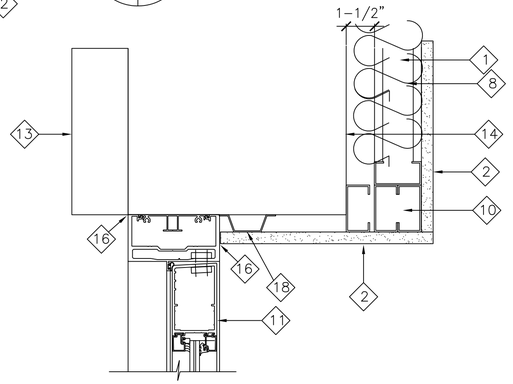

13 A-401 | A-601 — Jamb Detail 3"=1'-0"

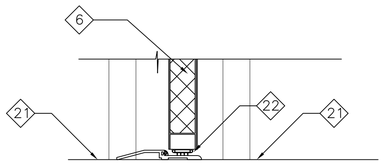

14 A-401 | A-601 — Sill Detail 3"=1'-0"

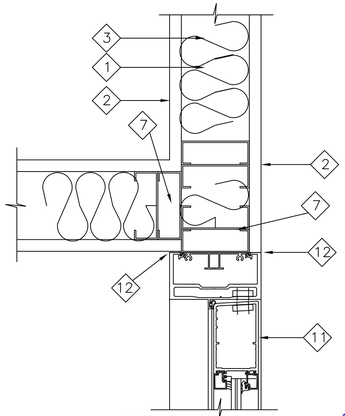

6A A-401 | A-601 — Jamb Detail 3"=1'-0"

DO NOT SCALE DRAWINGS

KEYNOTES:

1. 3" UNFACED FIBERGLASS BATT SOUND INSULATION, CONTINUOUS, TYPICAL. SEE SPECIFICATIONS.
2. 5/8" TYPE 'X' GYPSUM BOARD, CONTINUOUS, TYPICAL. SEE SPECIFICATIONS. GYPSUM BOARD SHALL BE MOLD & MILDEW RESISTANT AT REST ROOMS, JANITOR'S CLOSET, AND WET WALLS OF BREAK ROOM. SEE FINISH SCHEDULE.
3. 3-5/8" 20GA GALVANIZED METAL STUDS @ 16" O.C., TYPICAL. SEE WALL TYPES PLAN FOR LOCATIONS.
4. DBL 6" 20GA MTL STUD HEADER, TYPICAL.
5. GALV. HOLLOW METAL FRAME W/ 2" FACE. PROVIDE 3 JAMB ANCHORS EACH SIDE. PAINT FRAME. TYPICAL. SEE SPECIFICATIONS.
6. DOOR. SEE DOOR SCHEDULE, FINISH SCHEDULE, AND SPECIFICATIONS.
7. DBL 3-5/8" 20GA GALV. STEEL JAMB STUDS. TYPICAL.
8. 2-1/2" 20GA GALVANIZED METAL STUDS @ 16" O.C., TYPICAL. SEE WALL TYPES PLAN FOR LOCATIONS.
9. ACOUSTICAL SEALANT, CONTINUOUS. COLOR SHALL MATCH DOOR FRAME. TYPICAL.
10. 2-1/2" 20GA GALVANIZED METAL STUDS AS JAMBS, TYPICAL. SEE WALL TYPES PLAN FOR LOCATIONS.
11. DARK BRONZE ANODIZED ALUMINUM STOREFRONT SYSTEM, TYPICAL. SEE SPECIFICATIONS AND DOOR SCHEDULE.
12. SEALANT, CONTINUOUS. TYPICAL. COLOR SHALL MATCH ALUMINUM STOREFRONT SYSTEM.
13. EXISTING EXTERIOR INSULATION AND FINISH SYSTEM TO REMAIN, TYPICAL. PROTECT FROM DAMAGE DURING EXTENT OF WORK.
14. EXISTING CMU WALL CONSTRUCTION TO REMAIN, TYPICAL. PROTECT FROM DAMAGE DURING EXTENT OF WORK.
15. GALV. HOLLOW METAL FRAME W/ 4" FACE. PROVIDE 3 JAMB ANCHORS EACH SIDE. PAINT FRAME. TYPICAL. SEE SPECIFICATIONS.
16. SEALANT, CONTINUOUS. TYPICAL. COLOR SHALL MATCH DOOR FRAME.
17. 3-5/8" 20GA GALV. STEEL STUD, CONTINUOUS.
18. 7/8" 20GA GALV. STEEL FURRING CHANNEL, CONTINUOUS.
19. NEW ALUMINUM THRESHOLD SET IN THREE (3) CONTINUOUS BEADS OF SEALANT, TYPICAL. SEE SPECIFICATIONS.
20. EXISTING CONCRETE FLOOR SLAB TO REMAIN, TYPICAL. PROTECT FROM DAMAGE DURING EXTENT OF WORK.
21. NEW 4" THICK REINFORCED CONCRETE STOOP, TYPICAL.
21. NEW FLOOR FINISH. SEE FINISH SCHEDULE. TYPICAL.
22. NEW STC-RATED THRESHOLD AND DOOR BOTTOM. SET THRESHOLD IN THREE CONTINUOUS BEADS OF ACOUSTICAL SEALANT. SEE DOOR AND HARDWARE SCHEDULES. TYPICAL.
23. GROUT FRAME SOLID AS REQUIRED TO MEET STC 45 RATING.

STATE OF FLORIDA
PHILIP D. MORGAN
01/16/2018
AR0014409
REGISTERED ARCHITECT

100% SUBMITTAL

REV #	DATE	DESCRIPTION

REPAIR BUILDING 90748, 23 SOWS

DOOR DETAILS

AIR FORCE SPECIAL OPERATIONS COMMAND
1 SPECIAL OPERATIONS CIVIL ENGINEER SQUADRON
HURLBURT FIELD, FLORIDA

DATE: 16 JAN 2018
DESIGNED BY: PDM
DRAWN BY: JE FULLER
BUILDING NUMBER: 90748
PROJECT NUMBER: FTEV 16-3001
SHEET REFERENCE: A-601
SHEET NUMBER: 12 of 48

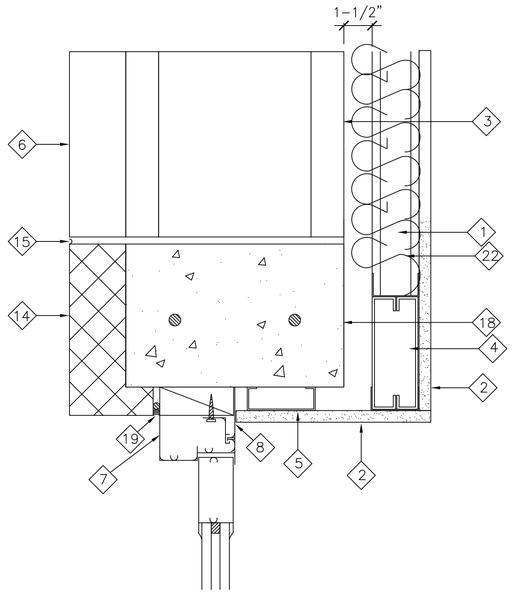

1 A-401 | A-602 3"=1'-0"
Head Detail

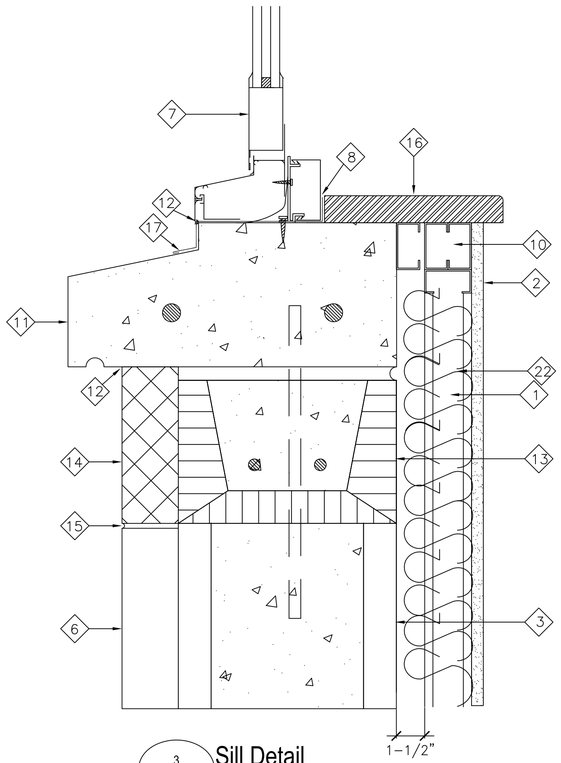

3 A-401 | A-602 3"=1'-0"
Sill Detail

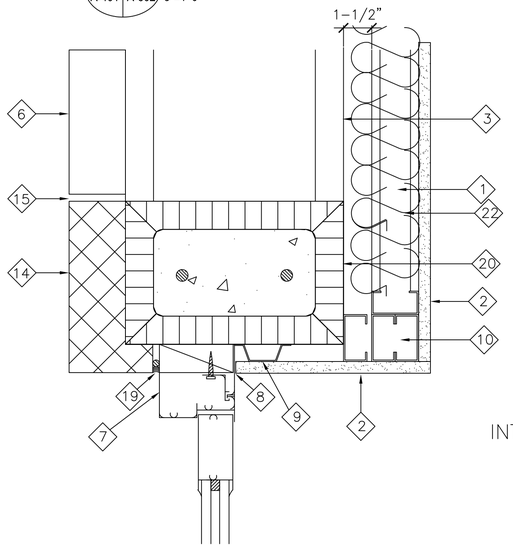

2 A-401 | A-602 3"=1'-0"
Jamb Detail

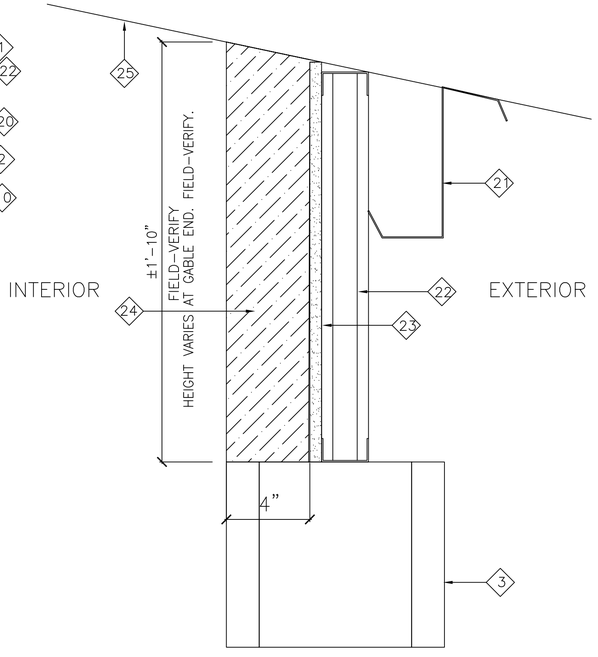

4 A-103 | A-602 3"=1'-0"
Exterior Wall Detail

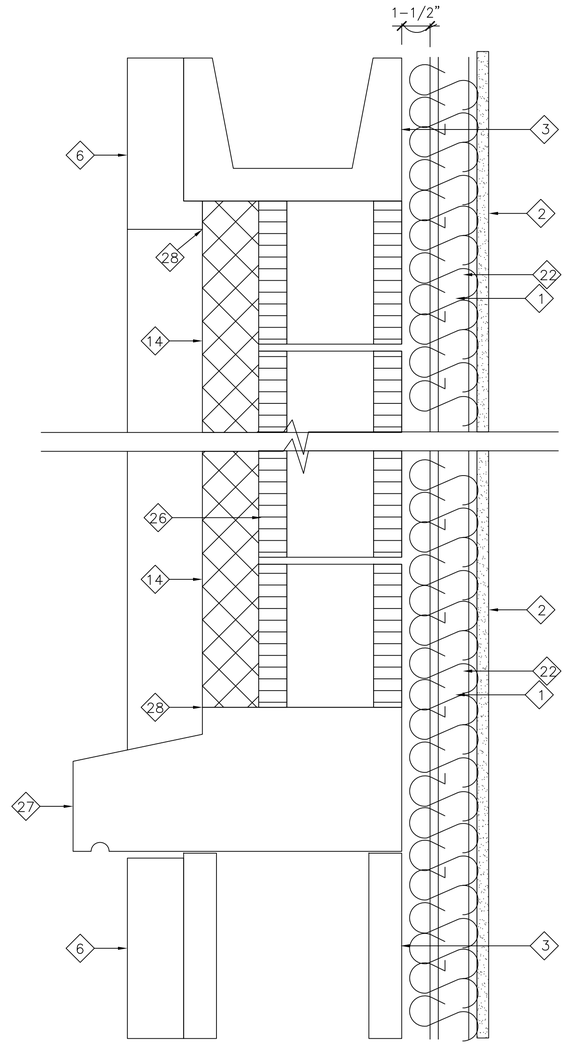

5 A-103 | A-602 3"=1'-0"
Exterior Wall Infill Detail

KEYNOTES:

1. 3" UNFACED FIBERGLASS BATT SOUND INSULATION, CONTINUOUS, TYPICAL. SEE SPECIFICATIONS.
2. 5/8" TYPE 'X' GYPSUM BOARD, CONTINUOUS, TYPICAL. SEE SPECIFICATIONS. GYPSUM BOARD SHALL BE MOLD & MILDEW RESISTANT AT REST ROOMS, JANITOR'S CLOSET, AND WET WALLS OF BREAK ROOM. SEE FINISH SCHEDULE.
3. EXISTING CMU WALL CONSTRUCTION TO REMAIN, TYPICAL. PROTECT FROM DAMAGE DURING EXTENT OF WORK.
4. DBL 6" 20GA MTL STUD HEADER, TYPICAL.
5. 3-5/8" 20GA GALV. STEEL STUD, CONTINUOUS.
6. EXISTING EXTERIOR INSULATION AND FINISH SYSTEM TO REMAIN, TYPICAL. PROTECT FROM DAMAGE DURING EXTENT OF WORK.
7. NEW PRE-FINISHED ANODIZED ALUMINUM FIXED WINDOW SYSTEM TO MATCH EXISTING. TYPICAL.
8. SEALANT, CONTINUOUS. TYPICAL. COLOR SHALL MATCH WINDOW FRAME.
9. 7/8" 20GA GALV. STEEL FURRING CHANNEL, CONTINUOUS.
10. 2-1/2" 20GA GALVANIZED METAL STUDS AS JAMBS, TYPICAL. SEE WALL TYPES PLAN FOR LOCATIONS.
11. NEW REINFORCED, PRE-CAST CONCRETE SILL, CONTINUOUS, TO MATCH EXISTING EIFS FINISH. TYPICAL.
12. SEALANT, CONTINUOUS. TYPICAL. COLOR SHALL MATCH EXTERIOR INSULATION AND FINISH SYSTEM.
13. NEW 12" CMU LINTEL BLOCK, FILLED SOLID WITH CONCRETE AND REINFORCED W/ 2-#5 BARS. CONCRETE FILL SHALL BE FLUSH WITH TOP OF BLOCK. FILL EXISTING CMU CELLS BELOW WITH CONCRETE, AND DOWEL NEW LINTEL BLOCK INTO EXISTING CMU.
14. NEW EXTERIOR INSULATION AND FINISH SYSTEM TO MATCH EXISTING THICKNESS, TEXTURE, AND COLOR. TYPICAL.
15. PROVIDE CONTROL JOINT BETWEEN EXISTING EIFS AND NEW EIFS AS REQUIRED BY EIFS MANUFACTURER. TYPICAL.
16. NEW SOLID SURFACE WINDOW STOOL. SEE COLOR SCHEDULE AND SPECIFICATIONS.
17. NEW PRE-FINISHED .040 ALUMINUM SILL FLASHING, CONTINUOUS, WITH INTEGRAL END DAMS. TYPICAL. COLOR SHALL MATCH EIFS.
18. NEW REINFORCED PRE-CAST CONCRETE LINTEL, CONTINUOUS, WITH MINIMUM OF 8" BEARING BOTH ENDS, TYPICAL.
19. NEW BACKER ROD AND SEALANT, CONTINUOUS, COMPATIBLE WITH EIFS AND ALUMINUM WINDOW SYSTEM. COLOR SHALL MATCH EIFS.
20. NEW REINFORCED 12" CMU JAMB BLOCK, TYPICAL. FILL ALL CELLS SOLID WITH CONCRETE, FULL HEIGHT OF OPENING.
21. EXISTING "Z" PURLIN TO REMAIN, TYPICAL. PROTECT FROM DAMAGE DURING EXTENT OF WORK.
22. 2-1/2" 20GA GALVANIZED METAL STUDS @ 16" O.C., TYPICAL. SEE WALL TYPES PLAN FOR LOCATIONS.
23. NEW 5/8" THICK TYPE 'X' GYPSUM SHEATHING, CONTINUOUS, ALL JOINTS TAPED, TYPICAL.
24. NEW CLOSED-CELL POLYURETHANE FOAM, CONTINUOUS, FROM TOP OF EXISTING CMU WALL TO UNDERSIDE OF EXISTING ROOF INSULATION. TRIM ANY EXCESS FOAM FLUSH WITH INSIDE FACE OF CMU, SO THAT FOAM IS UNIFORM THICKNESS. TYPICAL.
25. EXISTING VINYL-FACED BATT ROOF INSULATION TO REMAIN, TYPICAL. CLEAN THE UNDERSIDE OF THE ROOF INSULATION WITH A MILD COMMERCIAL DETERGENT SOLUTION AND VENTILATE TO DRY. WHEN FUNGAL CLEANING/REMEDIATION WORK IS PERFORMED, AND TO MINIMIZE ADDITIONAL POTENTIAL FOR SPREADING MOLD SPORES INTO THE AIR, THE WORK SHALL BE PERFORMED IN COMPLIANCE WITH THE CURRENT VERSION OF THE GUIDELINES REFERENCED HEREIN-"MOLD REMEDIATION IN SCHOOLS AND COMMERCIAL BUILDINGS", U.S. ENVIRONMENTAL PROTECTION AGENCY, EPA 402-K-01-001.
-"IICRC S520 STANDARD AND REFERENCE GUIDE FOR PROFESSIONAL MOLD REMEDIATION", INSTITUTE OF INSPECTION, CLEANING AND RESTORATION CERTIFICATION.
REPAIR ANY AND ALL TEARS/RIPS/HOLES IN EXISTING VINYL-FACED BATT INSULATION. PROTECT ALL INSULATION TO REMAIN FROM DAMAGE DURING EXTENT OF WORK. TYPICAL.
26. NEW 8" CMU WALL INFILL, CONTINUOUS, TYPICAL. ANCHOR TO ADJOINING WALL CONSTRUCTION WITH GALVANIZED STEEL MASONRY TIES AT 16" O.C. MAX. PREP CMU TO RECEIVE NEW EXTERIOR INSULATION AND FINISH SYSTEM (EIFS) AS REQUIRED BY EIFS MANUFACTURER. TYPICAL.
27. EXISTING CONCRETE WINDOW SILL TO REMAIN, TYPICAL. PROTECT FROM DAMAGE DURING EXTENT OF WORK. REPAIR ANY AND ALL DAMAGED FINISH TO MATCH EXISTING.
28. SEAL ANY AND ALL JOINTS BETWEEN NEW EIFS AND EXISTING WALL FINISHES AS REQUIRED BY THE EIFS MANUFACTURER. TYPICAL.

DO NOT SCALE DRAWINGS

100% SUBMITTAL

REV. #	DATE	DESCRIPTION

REPAIR BUILDING 90748,
23 SOWS

DETAILS

AIR FORCE SPECIAL OPERATIONS COMMAND
1 SPECIAL OPERATIONS CIVIL ENGINEER SQUADRON
HURLBURT FIELD, FLORIDA

STATE OF FLORIDA
PHILIP D. MORGAN
01/16/2018
AR0014409
REGISTERED ARCHITECT

DATE: 16 JAN 2018
DESIGNED BY: PDM
DRAWN BY: JE FULLER
BUILDING NUMBER: 90748
PROJECT NUMBER: FTEV 16-3001
SHEET REFERENCE: A-602
SHEET NUMBER: 13 of 48

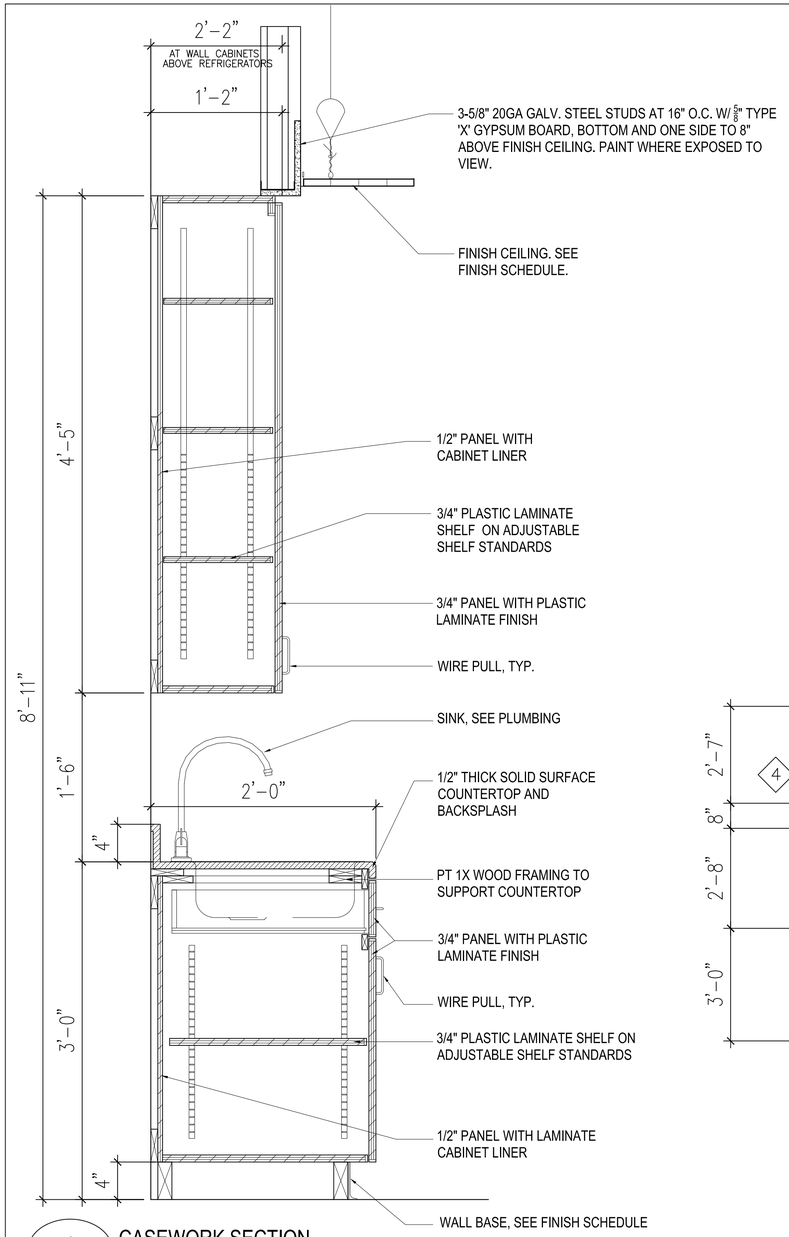

1 / A-301 | A-603 — CASEWORK SECTION

SCALE: 1-1/2" = 1'-0"

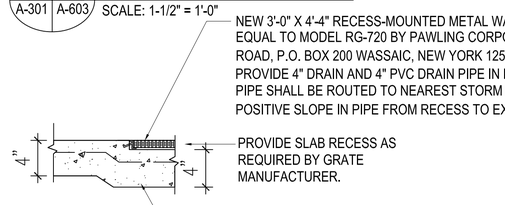

2 / A-101 | A-603 — ENTRANCE GRATE DETAIL

1-1/2"=1'-0"

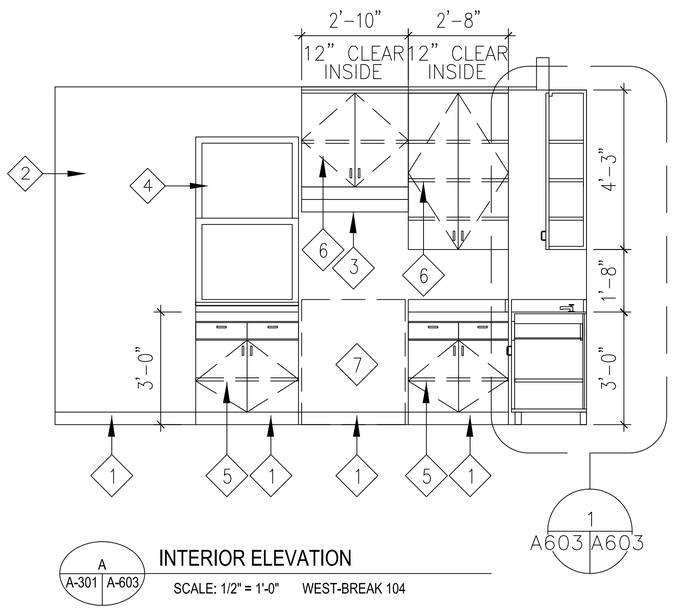

A / A-301 | A-603 — INTERIOR ELEVATION

SCALE: 1/2" = 1'-0" WEST-BREAK 104

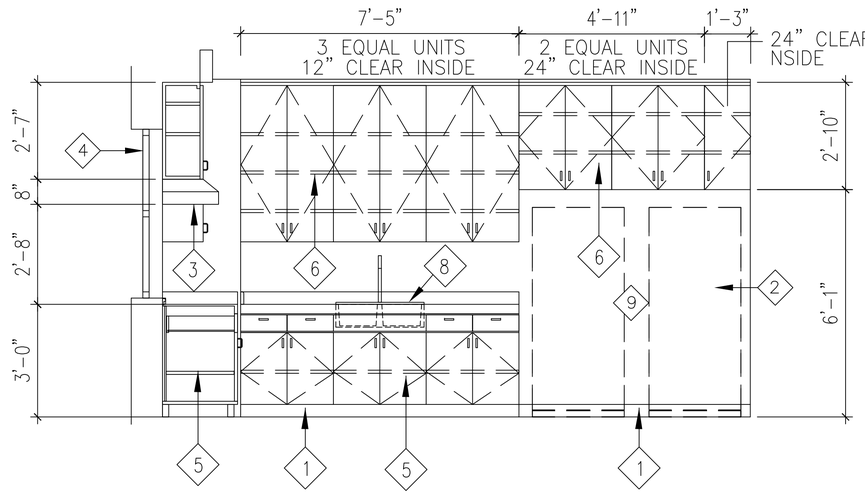

B / A-301 | A-603 — INTERIOR ELEVATION

SCALE: 1/2" = 1'-0" NORTH-BREAK 104

KEYNOTES:

1. 4" HIGH RESILIENT BASE. SEE FINISH SCHEDULE AND SPECIFICATIONS.
2. PAINTED GYPSUM BOARD. SEE WALL TYPES, SHEET A-101, AND FINISH SCHEDULE.
3. NEW WALL-MOUNTED RANGE HOOD. SEE MECHANICAL AND ELECTRICAL DOCUMENTS.
4. EXISTING WINDOW TO REMAIN. PROTECT FROM DAMAGE DURING EXTENT OF WORK. PROVIDE NEW WINDOW BLINDS AND SOLID SURFACE STOOL. SEE FINISH SCHEDULE & SPECS.
5. PLASTIC LAMINATE-CLAD BASE CABINETS, WITH SOLID SURFACE COUNTERTOP, BACK SPLASH, ADJUSTABLE SHELVES, AND ALL REQUIRED HARDWARE. SEE SPECIFICATIONS.
6. PLASTIC LAMINATE-CLAD WALL CABINETS, WITH ADJUSTABLE SHELVES, AND ALL REQUIRED HARDWARE. SEE SPECIFICATIONS.
7. SPACE FOR GOVERNMENT-FURNISHED/GOVERNMENT-INSTALLED RESIDENTIAL OVEN/STOVE UNIT. VERIFY CLEARANCE WITH GOVERNMENT. SEE MECHANICAL DOCUMENTS FOR RANGE HOOD.
8. TWO-COMPARTMENT STAINLESS STEEL SINK. SEE PLUMBING DOCUMENTS.
9. SPACE FOR TWO (2) GOVERNMENT-FURNISHED/GOVERNMENT-INSTALLED REFRIGERATORS. VERIFY CLEARANCE WITH GOVERNMENT. SEE PLUMBING DOCUMENTS FOR WATER CONNECTIONS.

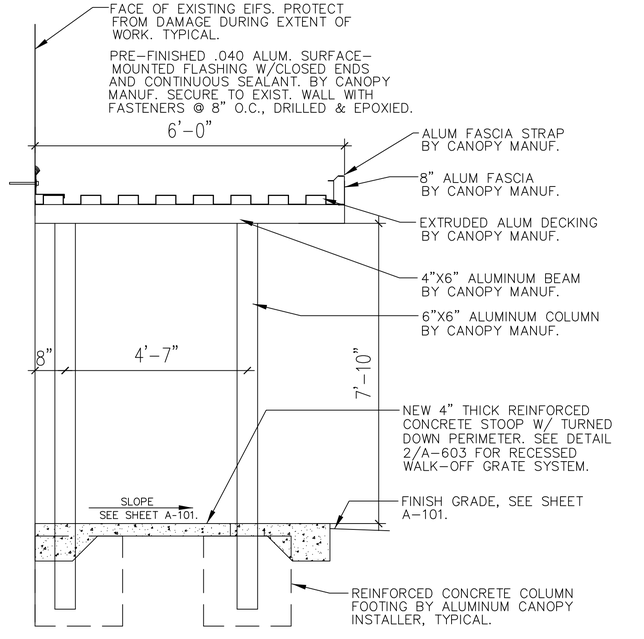

3 / A-101 | A-603 — ALUMINUM CANOPY DETAIL

SCALE: 1/2"=1'-0"

ALUMINUM ENTRANCE CANOPY SYSTEMS SHALL BE BY PEACHTREE PROTECTIVE COVERS 3255 S. SWEETWATER ROAD LITHIA SPRINGS, GA 30122 (800-341-3325) COMPLYING WITH WIND DESIGN FOR 133MPH, OR APPROVED EQUIVALENT. ALL COMPONENTS EXPOSED TO VIEW SHALL BE ANODIZED DARK BRONZE AS APPROVED BY CONTRACTING OFFICER. PROVIDE SHOP DRAWINGS AND CALCULATIONS BY PROFESSIONAL ENGINEER LICENSED IN STATE OF FLORIDA.

100% SUBMITTAL

REV #	DATE	DESCRIPTION

REPAIR BUILDING 90748, 23 SOWS

CASEWORK SECTION

AIR FORCE SPECIAL OPERATIONS COMMAND

1 SPECIAL OPERATIONS CIVIL ENGINEER SQUADRON

HURLBURT FIELD, FLORIDA

DATE: 16 JAN 2018

DESIGNED BY: PDM

DRAWN BY: JE FULLER

BUILDING NUMBER: 90748

PROJECT NUMBER: FTEV 16-3001

SHEET REFERENCE: A-603

SHEET NUMBER: 14 of 48

FIRE PROTECTION DESIGN CRITERIA

NAME OF FACILITY: BUILDING #90748
LOCATION: HURLBURT AFB
TYPE OF CONSTRUCTION: NON-COMBUSTIBLE
OWNER: GOVERNMENT
AUTHORITY HAVING JURISDICTION: AFCEC
BUILDING HAZARD: AS SHOWN ON PLAN

WATER DEMANDS			
OCCUPANCY CLASSIFICATION	DESIGN DENSITY GPM/SQ. FT.	WET DESIGN AREA SQ. FT.	HOSE GPM
LIGHT	0.10	1500	250
ORDINARY	0.20	2500	250
LIGHT HAZARD: OFFICES, CONFERENCE, RESTROOMS ORDINARY HAZARD: MECHANICAL/ELECTRICAL RM, BREAK RM			

PRELIMINARY FIRE FLOW TEST DATA*

PRELIMINARY FIRE FLOW TEST DATA*

DATE: AUGUST 8, 2017
TIME: 12:00 PM
STATIC PRESSURE: 56 PSI
RESIDUAL PRESSURE: 54 PSI
WATER FLOW: 750 GPM

FLOW TEST PROVIDED FOR INFORMATION ONLY
SOURCE OF WATER SUPPLY: REGIONAL UTILITIES

* CURRENT FLOW TEST DATA IS PRELIMINARY. FLOW TEST SHALL BE PERFORMED BY SPRINKLER CONTRACTOR FOR DESIGN.

NOTIFY ENGINEER OF RECORD IN THE EVENT THAT FIRE FLOW TEST RESULTS ARE LESS THAN INDICATED.

FIRE PROTECTION GENERAL NOTES

1. ALL SPRINKLER PIPING, BRACES AND HANGERS SHALL BE DESIGNED TO MEET APPLICABLE SEISMIC REQUIREMENTS.
2. QUICK RESPONSE SPRINKLERS SHALL BE USED THROUGHOUT, EXCEPT IN ROOMS OR AREAS FOR WHICH QUICK RESPONSE SPRINKLERS ARE NOT LISTED, OR WHERE THEIR USE HAS BEEN SPECIFICALLY PROHIBITED BY NFPA OR THE AUTHORITY HAVING JURISDICTION.
3. PIPING SHALL BE INSTALLED SO THAT ALL PORTIONS OF THE SYSTEM CAN BE DRAINED BACK THROUGH VALVES IN ACCORDANCE WITH THE REFERENCED NFPA STANDARDS.
4. ALL FIRE WALL PENETRATIONS SHALL BE MADE WITH UL APPROVED FIRE STOPPING SYSTEMS LISTED TO MAINTAIN THE FIRE RATING OF THE WALLS IN WHICH THEY ARE INSTALLED.
5. INSPECTOR'S TEST VALVE TO BE PIPED FROM END OF LAST BRANCH LINE WITH NO EXPOSED PIPE IN FINISHED SPACES.
6. FULLY COORDINATE INSTALLATION OF PIPE WITH ALL OTHER TRADES, WITH PARTICULAR EMPHASIS ON COORDINATION WITH HVAC DUCTWORK. SPRINKLER PIPE SHALL NOT BE SUSPENDED FROM DUCT HANGERS UNLESS THESE SUPPORTS ARE SPECIFICALLY DESIGNED TO ACCOMMODATE SPRINKLER PIPE. HANGERS SHALL BE IN ACCORDANCE WITH NFPA 13.
7. CALCULATIONS AND FIRE FLOW TEST SHALL BE CONDUCTED BY FIRE PROTECTION CONTRACTOR.
8. FIRE PROTECTION CONTRACTOR SHALL REPAIR ALL LEAKS IN THE EXISTING FIRE SUPPRESSION SYSTEM.
9. FIRE SUPPRESSION MODIFICATIONS SHALL BE IN ACCORDANCE WITH UFC 3-600-01, CHANGE 1, DATED 28 NOVEMBER 2016 FIRE PROTECTION ENGINEERING FOR FACILITIES, NFPA13, THE SPECIFICATIONS, AND THE AUTHORITY HAVING JURISDICTION. FIRE SPRINKLER CONTRACTOR SHALL PREPARE AND SUBMIT SHOP DRAWINGS FOR APPROVAL PRIOR TO CONSTRUCTION.
10. FLEXIBLE SPRINKLER HOSE SHALL NOT BE PERMITTED.

LEGEND

AHJ	AUTHORITY HAVING JURISDICTION
IAW	IN ACCORDANCE WITH
AFF	ABOVE FINISHED FLOOR
MIN	MINIMUM
MAX	MAXIMUM
DIA	DIAMETER
OS&Y	OUTSIDE SCREW AND YOKE
PSI	POUNDS PER SQUARE INCH
GPM	GALLONS PER MINUTE
SQ. FT.	SQUARE FOOT

NEW CONNECTION POINT

DEMOLISH TO POINT SHOWN

DEMOLITION SPRINKLER PIPING

NEW SPRINKLER PIPING

EXISTING SPRINKLER PIPING

SPRINKLER HEAD

PETERSON ENGINEERING INC.
(PROF. ENG. #: 3600)
75 SOUTH "F" STREET
PENSACOLA, FLORIDA 32502
(850) 434-0513
PEI JOB #17074

JEDEDIAH CHARLES BRADLEY
LICENSE
No.38396
STATE OF
FLORIDA
PROFESSIONAL ENGINEER
1/23/18

100% SUBMITTAL

REV #	DATE	DESCRIPTION

REPAIR BUILDING 90748
23 SOWS

GENERAL FIRE PROTECTION INFORMATION

AIR FORCE SPECIAL OPERATIONS COMMAND
1 SPECIAL OPERATIONS CIVIL ENGINEER SQUADRON
HURLBURT FIELD, FLORIDA

DATE: 16 JAN 2018
DESIGNED BY: GDP
DRAWN BY: DJM
BUILDING NUMBER: 90748
PROJECT NUMBER: FTEV16-3001
SHEET REFERENCE: FP-001
SHEET NUMBER: 15 OF 48

SHEET NOTES

1. REMOVE AND REPLACE EXISTING WET PIPE FIRE SUPPRESSION SYSTEM AS INDICATED. ALL FIRE SUPPRESSION PIPING BETWEEN THE FIRE RISER AND THE EXISTING TO REMAIN SOUTH SIDE OF THE BUILDING SHALL BE REMOVED AND REPLACED. FIRE SUPPRESSION SYSTEM SHALL BE IN ACCORDANCE WITH UFC 3-600-01, CHANGE 1, DATED 28 NOVEMBER 2016 FIRE PROTECTION ENGINEERING FOR FACILITIES, NFPA13, THE SPECIFICATIONS, AND THE AUTHORITY HAVING JURISDICTION. FIRE SPRINKLER CONTRACTOR SHALL PREPARE AND SUBMIT SHOP DRAWINGS FOR APPROVAL PRIOR TO CONSTRUCTION.
2. REMOVE EXISTING FIRE SUPPRESSION PIPING BACK TO FIRE RISER.
3. DISCONNECT PIPING AT POINT INDICATED.
4. GOVERNMENT SHALL DO A FIRE SAFETY WALK THROUGH OF THE BUILDING EACH DAY BEFORE THE CONTRACTOR LEAVES THE SITE FOR THE DAY. CONTRACTOR SHALL COORDINATE FIRE SAFETY CHECK WITH THE GOVERNMENT.

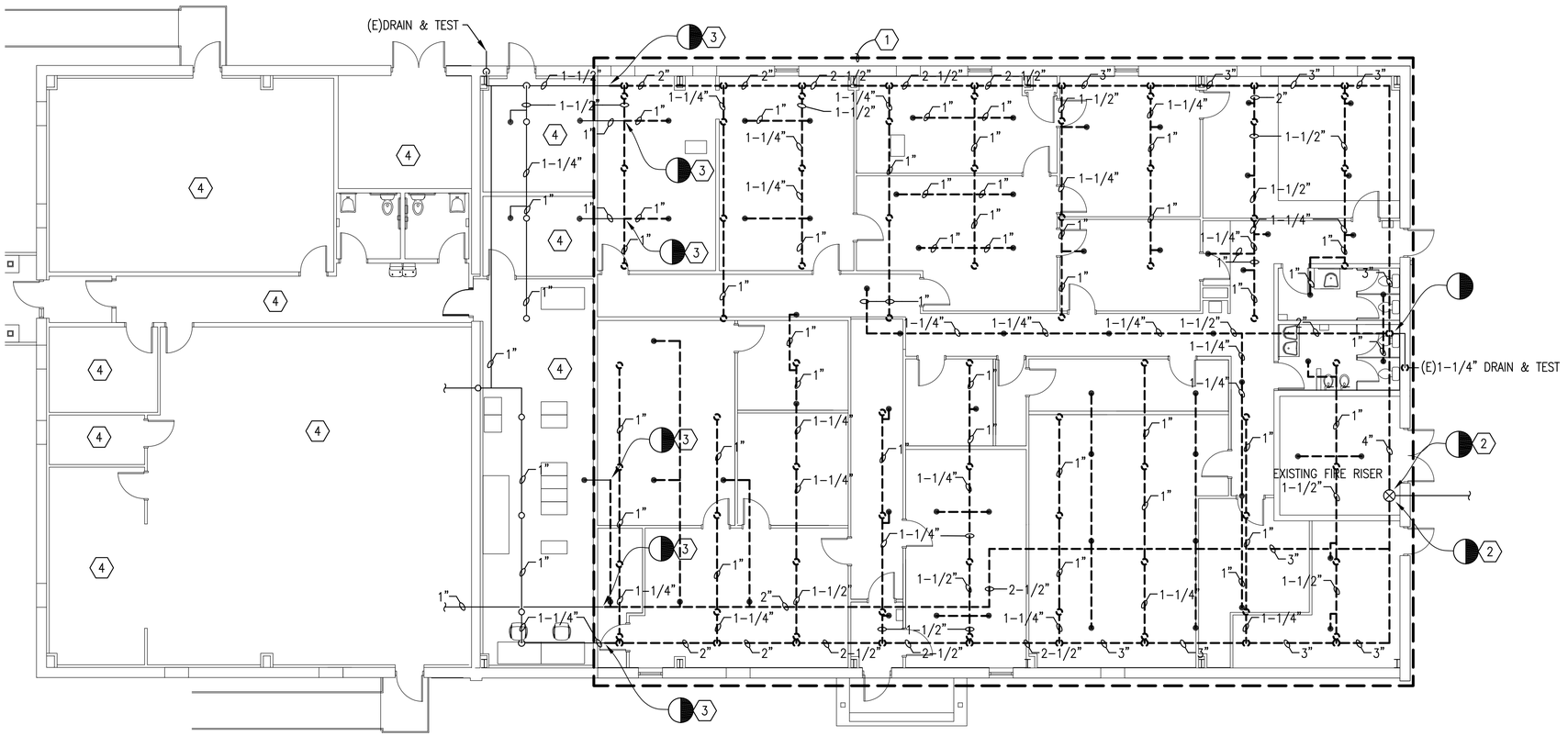

FIRST FLOOR FIRE PROTECTION DEMOLITION PLAN
SCALE: 1/8" = 1'-0"

8' 0' 8' 16'
SCALE: 1/8"=1'-0"

PETERSON ENGINEERING INC.
(PROF. ENG. #: 3600)
75 SOUTH "F" STREET
PENSACOLA, FLORIDA 32502
(850) 434-0513
PEI JOB #17074

JEDEDIAH CHARLES BRADLEY LICENSE No.36396 STATE OF FLORIDA PROFESSIONAL ENGINEER 1/23/18

100% SUBMITTAL

REV #	DATE	DESCRIPTION

REPAIR BUILDING 90748
23 SOWS
FIRE PROTECTION PLAN - DEMOLITION

AIR FORCE SPECIAL OPERATIONS COMMAND
1 SPECIAL OPERATIONS CIVIL ENGINEER SQUADRON
HURLBURT FIELD, FLORIDA

DATE:	16 JAN 2018
DESIGNED BY:	FCB
DRAWN BY:	DJM
BUILDING NUMBER:	90748
PROJECT NUMBER:	FTEV16-3001
SHEET REFERENCE:	FP-101
SHEET NUMBER:	16 OF 48

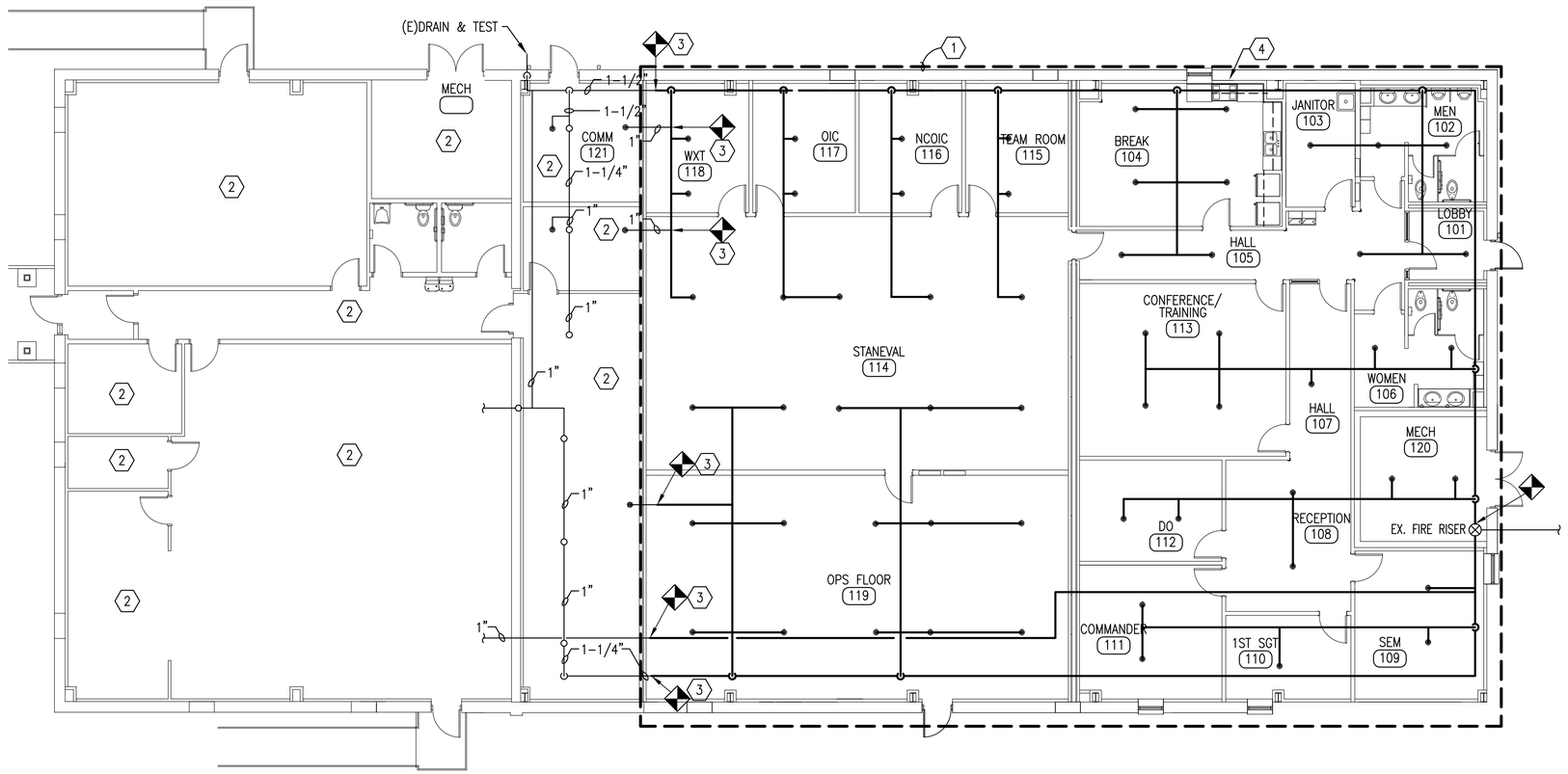

FIRST FLOOR FIRE PROTECTION NEW WORK PLAN
SCALE: 1/8" = 1'-0"

SHEET NOTES

1. PROVIDE NEW FIRE SUPPRESSION PIPING AS INDICATED. FIRE SUPPRESSION SYSTEM SHALL BE IN ACCORDANCE WITH UFC 3-600-01, CHANGE 1, DATED 28 NOVEMBER 2016 FIRE PROTECTION ENGINEERING FOR FACILITIES, NFPA13, THE SPECIFICATIONS, AND THE AUTHORITY HAVING JURISDICTION. FIRE SPRINKLER CONTRACTOR SHALL PREPARE AND SUBMIT SHOP DRAWINGS FOR APPROVAL PRIOR TO CONSTRUCTION.
2. GOVERNMENT SHALL DO A FIRE SAFETY WALK THROUGH OF THE BUILDING EACH DAY BEFORE THE CONTRACTOR LEAVES THE SITE FOR THE DAY. CONTRACTOR SHALL COORDINATE FIRE SAFETY CHECK WITH THE GOVERNMENT.
3. TIE IN NEW FIRE SUPPRESSION SYSTEM INTO EXISTING AT POINT INDICATED. INSTALL ISOLATION VALVES AT EXISTING TO NEW POINTS OF CONNECTION. EXISTING TO REMAIN FIRE SUPPRESSION PIPING SHALL BE TESTED PRIOR TO TESTING NEW FIRE SUPPRESSION PIPING. ISOLATION VALVES SHALL INTERFACE WITH FIRE ALARM SYSTEM. SEE FIRE ALARM DRAWINGS.
4. NEW STOVE TOP HOOD WITH INTEGRAL CHEMICAL FIRE SUPPRESSION SYSTEM. THE SYSTEM SHALL BE PROVIDED IN ACCORDANCE WITH NFPA 96. SEE SHEET M-102, NOTE #6. INTERFACE WITH BUILDING FIRE ALARM SYSTEM, SEE FIRE ALARM DRAWINGS. STOVE SHALL SHUTDOWN UPON FIRE SUPPRESSION ACTIVATION.

8' 0' 8' 16'
SCALE: 1/8"=1'-0"

PETERSON ENGINEERING INC.
(PROF. ENG. #: 3600)
75 SOUTH "F" STREET
PENSACLA, FLORIDA 32502
(850) 434-0513
PEI JOB #17074

100% SUBMITTAL

REV #	DATE	DESCRIPTION

REPAIR BUILDING 90748
23 SOWS

FIRE PROTECTION PLAN - NEW WORK

AIR FORCE SPECIAL OPERATIONS COMMAND
1 SPECIAL OPERATIONS CIVIL ENGINEER SQUADRON
HURLBURT FIELD, FLORIDA

DATE:	16 JAN 2018
DESIGNED BY:	FCB
DRAWN BY:	DJM
BUILDING NUMBER:	90748
PROJECT NUMBER:	FTEV16-3001
SHEET REFERENCE:	FP-102
SHEET NUMBER:	17 OF 48

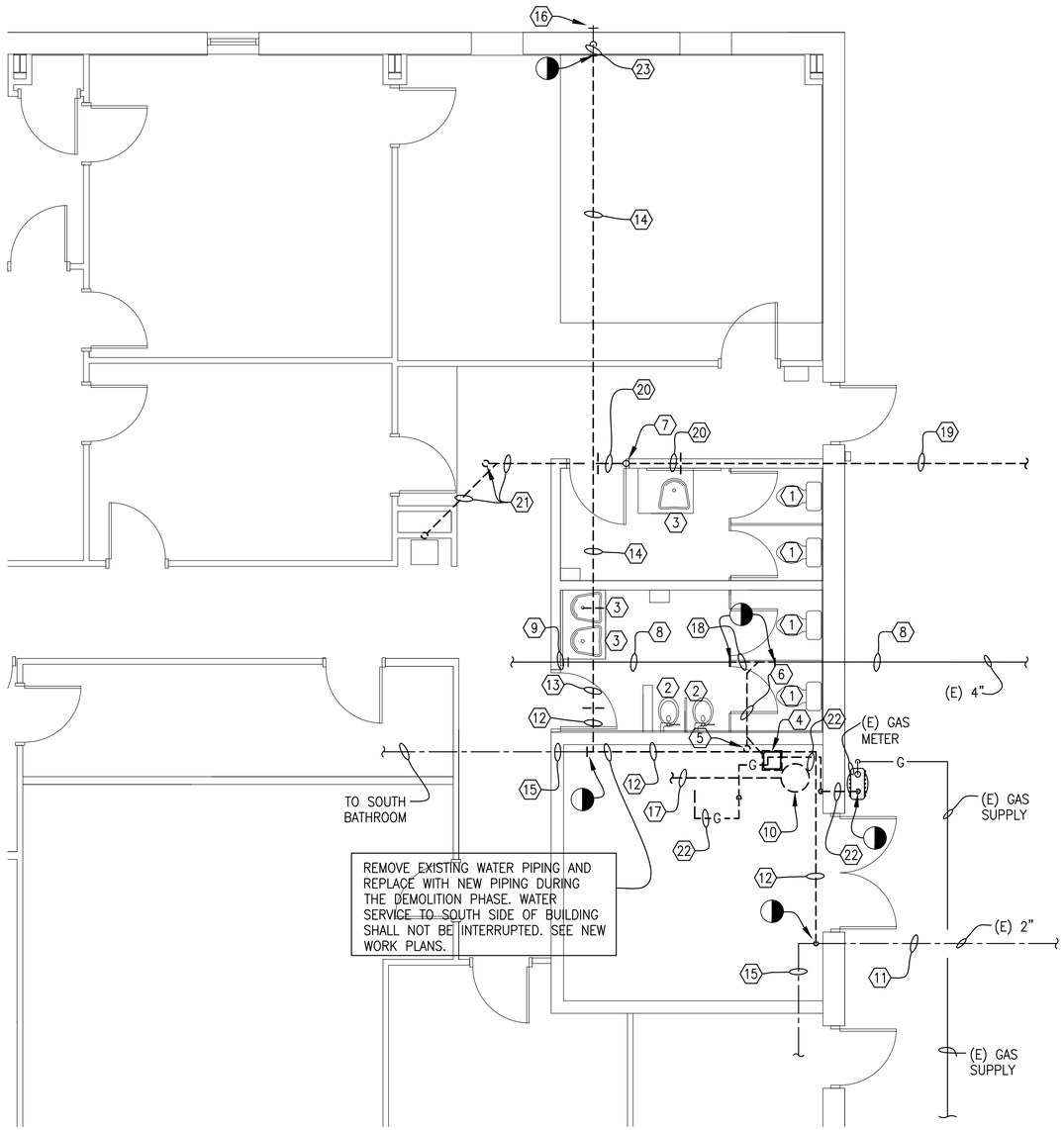

N

PLUMBING PLAN – DEMOLITION

SCALE: 1/4" = 1'-0"

5' 0 5'

SCALE: 1/4"= 1'-0"

DEMOLITION NOTES:

1. REMOVE EXISTING FLOOR MOUNTED TANK TYPE WATER CLOSET COMPLETELY WITH ALL ACCESSORIES. REMOVE WASTE AND WATER PIPING COMPLETELY. PATCH FLOOR TO MATCH EXISTING.
2. REMOVE EXISTING FLOOR MOUNTED FLUSH VALVE TYPE WATER CLOSET COMPLETELY WITH ALL ACCESSORIES. REMOVE WASTE AND WATER PIPING COMPLETELY. PATCH FLOOR TO MATCH EXISTING.
3. REMOVE COUNTER MOUNTED LAVATORY COMPLETELY WITH ALL ACCESSORIES. REMOVE WASTE AND WATER PIPING COMPLETELY.
4. EXISTING FLOOR SINK IN MECHANICAL TO REMOVED COMPLETE WITH ALL ACCESSORIES.
5. EXISTING CLEANOUT IN MECHANICAL ROOM TO REMOVED COMPLETE WITH ALL ACCESSORIES.
6. EXISTING 3" WASTE PIPING TO BE REMOVED.
7. EXISTING 3" VENT THRU ROOF TO REMAIN. TEMPORARILY CAP EXISTING VENT PIPING FOR CONNECTION OF NEW VENT PIPING.
8. EXISTING 4" WASTE PIPING TO REMAIN.
9. EXISTING 3" WASTE PIPING TO REMAIN.
10. EXISTING ELECTRIC WATER HEATER TO BE REMOVED COMPLETELY WITH ALL ACCESSORIES. REMOVE WATER PIPING TO WATER HEATER COMPLETELY.
11. EXISTING 2" WATER PIPING TO REMAIN.
12. EXISTING SECTION OF 1-1/2" WATER PIPING TO BE REMOVED. REMOVAL WORK MUST BE DONE AFTER HOURS OF OPERATION AS TO KEEP SERVICE TO THE SOUTH BATHROOM DURING WORKING HOURS.
13. EXISTING SECTION OF 1-1/4" WATER PIPING TO BE REMOVED.
14. EXISTING 3/4" WATER PIPING TO BE REMOVED AND TEMPORARILY CAPPED IN CEILING AT EXISTING HOSE BIBB PIPING.
15. EXISTING 3/4" WATER PIPING TO REMAIN TO EXISTING BATHROOM AT SOUTH END OF BUILDING.
16. EXISTING HOSE BIBB TO REMAIN.
17. EXISTING HOT WATER PIPING TO BE REMOVED COMPLETELY.
18. SECTION OF EXISTING 4" WASTE PIPING TO BE REMOVED. TEMPORARILY CAP WASTE PIPING.
19. REMOVE EXISTING 4" WASTE PIPING COMPLETELY. CAP PIPING AT MANHOLE.
20. REMOVE EXISTING 3" WASTE PIPING COMPLETELY.
21. REMOVE EXISTING 2" WASTE PIPING COMPLETELY. REMOVE CLEANOUT COMPLETELY. PATCH FLOOR TO MATCH.
22. REMOVE EXISTING GAS LINE BACK TO METER. PREPARE FOR NEW GAS LINE.
23. EXISTING 3/4" PIPING TO HOSE BIBB TO REMAIN AND BE TEMPORARILY CAPPED.

LEGEND:

- DEMOLITION PIPING
- EXISTING SOIL OR WASTE PIPING
- EXISTING COLD WATER PIPING
- G — EXISTING GAS PIPING
- (E) EXISTING
- LIMITS OF DEMOLITION

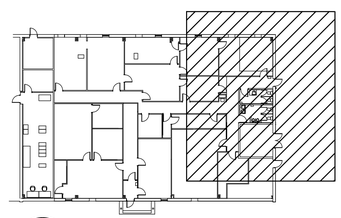

N

KEY PLAN

NOT TO SCALE

PETERSON ENGINEERING INC.
(PROF. ENG. #: 3600)
75 SOUTH "F" STREET
PENSACOLA, FLORIDA 32502
(850) 434-0513
PEI JOB #17074

GREGORY DAMIAN JOHNSON — LICENSE NO. 74088 — STATE OF FLORIDA — PROFESSIONAL ENGINEER

100% SUBMITTAL

REV #	DATE	DESCRIPTION

REPAIR BUILDING 90748
23 SOWS

PLUMBING PLAN - DEMOLITION

AIR FORCE SPECIAL OPERATIONS COMMAND
1 SPECIAL OPERATIONS CIVIL ENGINEER SQUADRON
HURLBURT FIELD, FLORIDA

DATE:	16 JAN 2018
DESIGNED BY:	GDP
DRAWN BY:	CAJ
BUILDING NUMBER:	90748
PROJECT NUMBER:	FTEV16-3001
SHEET REFERENCE:	P-101
SHEET NUMBER:	18 OF 48

D:\PROJECT\2017\17074 Repair Bldg. 90748 SOS\DWG\Plumbing\17074P101.dwg, 1/24/2018 1:22:38 PM, joiner

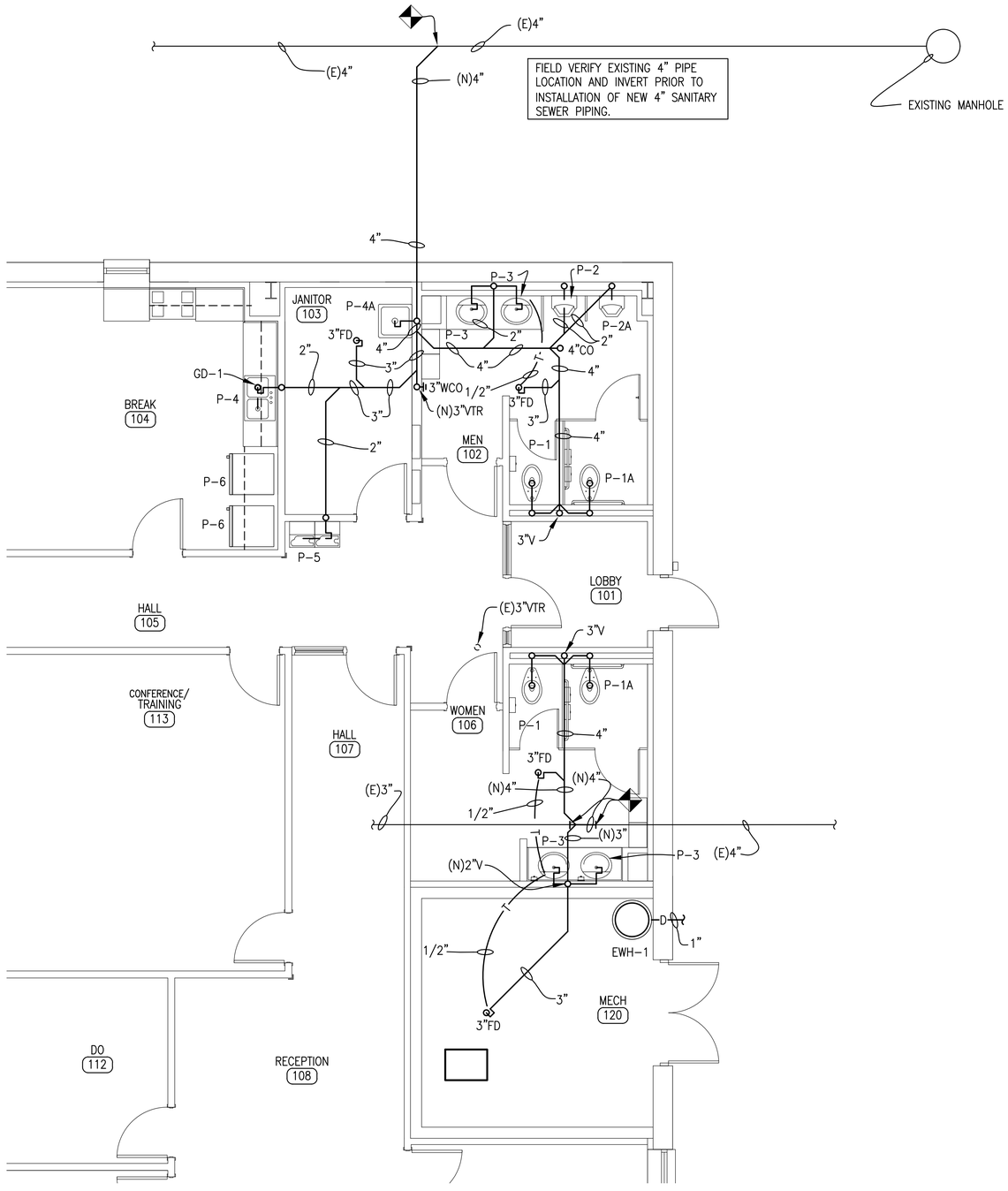

PLUMBING PLAN – NEW WORK – WASTE

SCALE: 1/4" = 1'-0"

5' 0 5'

SCALE: 1/4"= 1'-0"

LEGEND:

	EXISTING SOIL OR WASTE PIPING
	NEW SOIL OR WASTE PIPING
—T—	TRAP PRIMER PIPING
—D—	DRAIN PIPING
VTR	VENT THRU ROOF
FD	FLOOR DRAIN
CO	CLEAN OUT
EWH	ELECTRIC WATER HEATER
(E)	EXISTING
(N)	NEW
FS	FLOOR SINK
V	VENT
WCO	WALL CLEANOUT
GD	GARBAGE DISPOSAL
	NEW TO EXISTING CONNECTION

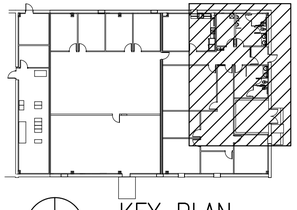

KEY PLAN

NOT TO SCALE

PETERSON ENGINEERING INC.

(PROF. ENG. #: 3600)

75 SOUTH "F" STREET

PENSACOLA, FLORIDA 32502

(850) 434-0513

PEI JOB #17074

100% SUBMITTAL

GREGORY DAMIAN PETERSON LICENSED No. 34088 STATE OF FLORIDA PROFESSIONAL ENGINEER 1/16/18

REV #	DATE	DESCRIPTION

REPAIR BUILDING 90748

23 SOWS

PLUMBING PLAN - NEW WORK - WASTE

AIR FORCE SPECIAL OPERATIONS COMMAND

1 SPECIAL OPERATIONS CIVIL ENGINEER SQUADRON

HURLBURT FIELD, FLORIDA

DATE: 16 JAN 2018

DESIGNED BY: GDP

DRAWN BY: CAJ

BUILDING NUMBER: 90748

PROJECT NUMBER: FTEV16-3001

SHEET REFERENCE: P-102

SHEET NUMBER: 19 OF 48

D:\PROJECT\2017\17074 Repair Bldg. 90748 SOS\DWG\Plumbing\17074P102.dwg, 1/24/2018 1:22:42 PM, joiner

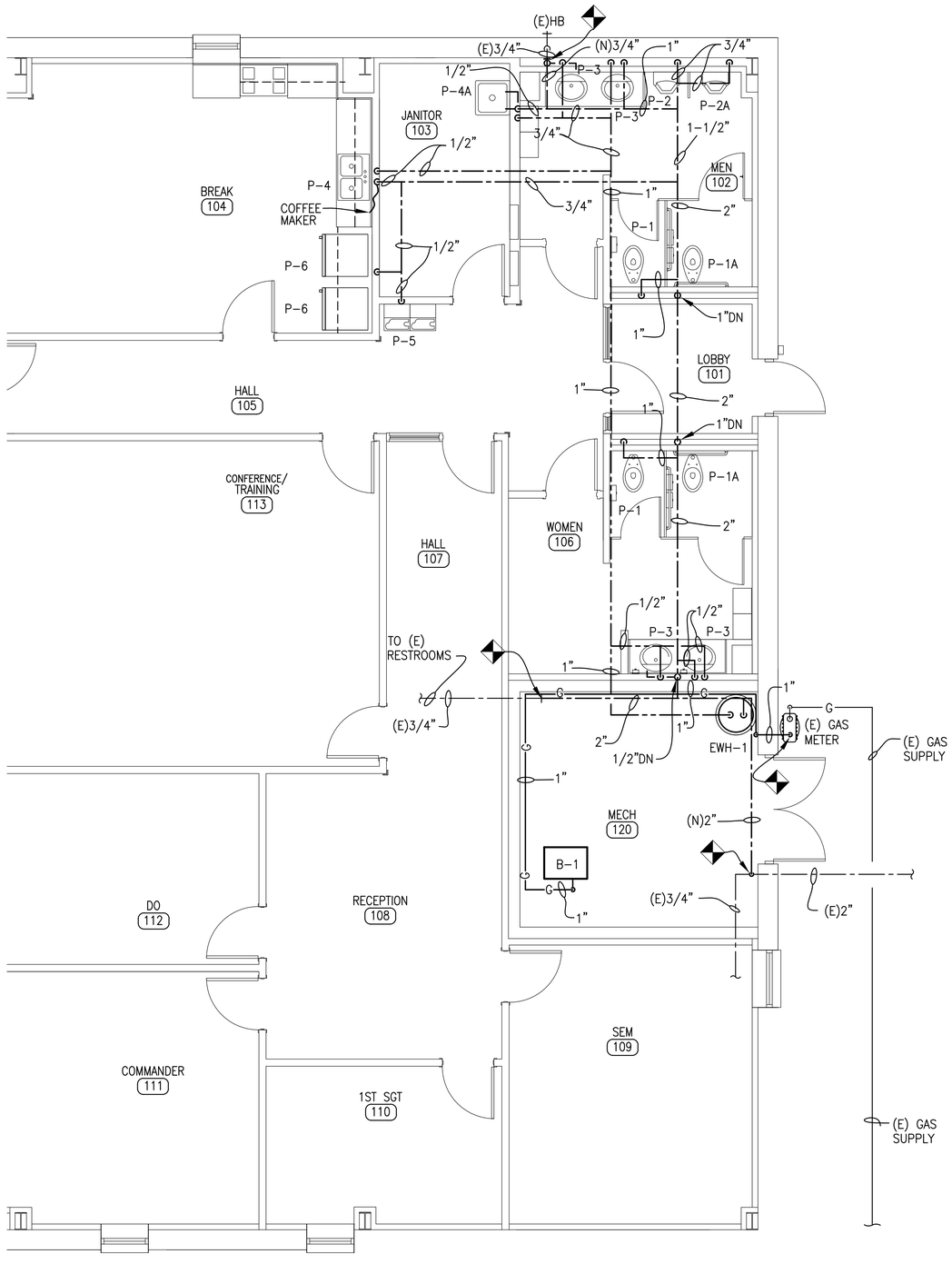

N

PLUMBING PLAN – NEW WORK – WATER

SCALE: 1/4" = 1'-0"

5' 0 5'

SCALE: 1/4"= 1'-0"

LEGEND:

———————	EXISTING COLD WATER PIPING
———————	NEW COLD WATER PIPING
———————	NEW HOT WATER PIPING
———G———	NEW GAS PIPING
———G———	EXISTING GAS PIPING
EWH	ELECTRIC WATER HEATER
HB	HOSE BIBB
(E)	EXISTING
(N)	NEW
DN	DOWN
	NEW TO EXISTING CONNECTION

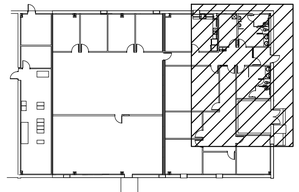

N

KEY PLAN

NOT TO SCALE

PETERSON ENGINEERING INC.

(PROF. ENG. #: 3600)
75 SOUTH "F" STREET
PENSACOLA, FLORIDA 32502
(850) 434-0513
PEI JOB #17074

GREGORY DAMIAN PETERSON — LICENSED — No. 34088 — STATE OF FLORIDA — PROFESSIONAL ENGINEER — 1/16/18

100% SUBMITTAL

REV #	DATE	DESCRIPTION

REPAIR BUILDING 90748
23 SOWS

PLUMBING PLAN - NEW WORK - WATER

AIR FORCE SPECIAL OPERATIONS COMMAND
1 SPECIAL OPERATIONS CIVIL ENGINEER SQUADRON
HURLBURT FIELD, FLORIDA

DATE: 16 JAN 2018
DESIGNED BY: GDP
DRAWN BY: CAJ
BUILDING NUMBER: 90748
PROJECT NUMBER: FTEV16-3001
SHEET REFERENCE: P-103
SHEET NUMBER: 20 OF 48

D:\PROJECT\2017\17074 Repair Bldg. 90748 SOS\DWG\Plumbing\17074P103.dwg, 1/24/2018 1:22:47 PM, joiner

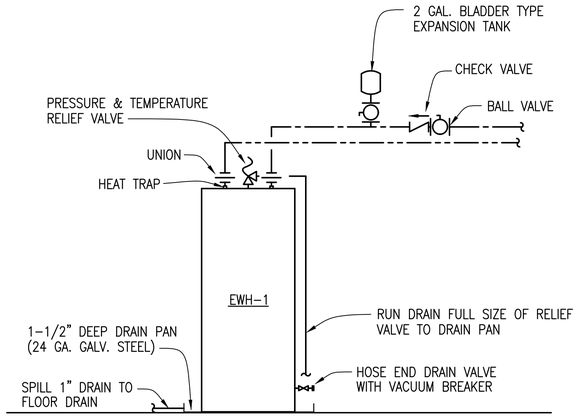

ELECTRIC WATER HEATER CONNECTION DETAIL
NOT TO SCALE

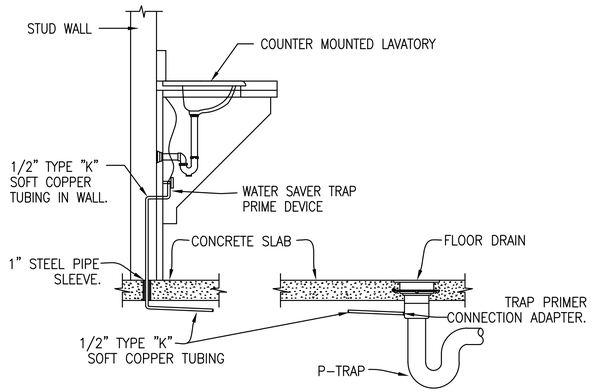

TRAP PRIMER INSTALLATION DETAIL
NOT TO SCALE

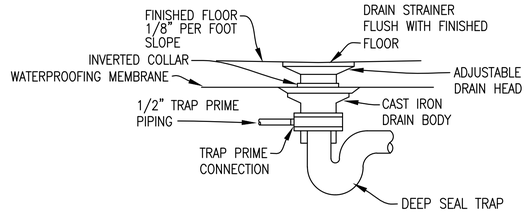

FLOOR DRAIN DETAIL
NOT TO SCALE

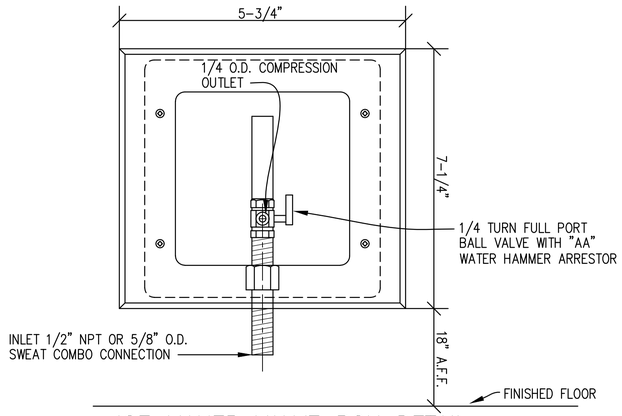

ICE MAKER VALVE BOX DETAIL
NOT TO SCALE

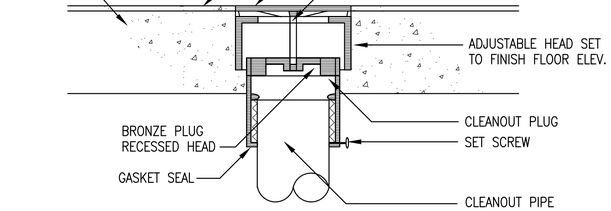

CLEANOUT DETAIL
NOT TO SCALE

PETERSON ENGINEERING INC.
(PROF. ENG. #: 3600)
75 SOUTH "F" STREET
PENSACLE, FLORIDA 32502
(850) 434-0513
PEI JOB #17074

100% SUBMITTAL

REV #	DATE	DESCRIPTION

REPAIR BUILDING 90748
23 SOWS
PLUMBING DETAILS

AIR FORCE SPECIAL OPERATIONS COMMAND
1 SPECIAL OPERATIONS CIVIL ENGINEER SQUADRON
HURLBURT FIELD, FLORIDA

DATE: 16 JAN 2018
DESIGNED BY: GDP
DRAWN BY: CAJ
BUILDING NUMBER: 90748
PROJECT NUMBER: FTEV16-3001
SHEET REFERENCE: P-501
SHEET NUMBER: 21 OF 48

D:\PROJECT\2017\17074 Repair Bldg. 90748 SOS\DWG\Plumbing\17074P501.dwg, 1/24/2018 1:22:51 PM, joiner

FIXTURE CONNECTION SCHEDULE

MARK	DESCRIPTION	WASTE	CW	HW	REMARKS
P-1	WATER CLOSET	4"	1"	--	FLOOR MOUNTED FLUSH VALVE TYPE AT 1.28 GPF
P-1A	WATER CLOSET (ADA)	4"	1"	--	FLOOR MOUNTED FLUSH VALVE TYPE AT 1.28 GPF
P-2	URINAL	2"	3/4"	--	WALL HUNG FLUSH VALVE TYPE AT 0.125 GPF
P-2A	URINAL (ADA)	2"	3/4"	--	WALL HUNG FLUSH VALVE TYPE AT 0.125 GPF
P-3	LAVATORY (ADA)	1-1/4"	1/2"	1/2"	INTEGRAL TO COUNTER TOP VITREOUS CHINA AT 0.5 GPM
P-4	KITCHEN SINK	2"	1/2"	1/2"	33"x19-1/2"x10-1/8"DEEP STAINLESS STEEL W/ DISPOSAL, PROVIDE WITH BACK SPLASH
P-4A	SERVICE SINK	3"	1/2"	1/2"	23-1/8"x20"x14-3/8"DEEP FREE STANDING PLASTIC POLYMER
P-5	ELECTRIC WATER COOLER (ADA)	1-1/4"	1/2"	--	WALL HUNG SPLIT LEVEL BUBBLER STYLE
P-6	ICE MAKER VALVE BOX	--	1/2"	--	WALL RECESSED WITH TYPE "AA" WATER HAMMER ARRESTOR
FD	FLOOR DRAIN	3"	1/2"	--	PROVIDE WITH TRAP PRIME

(ADA) DENOTES FIXTURES TO BE MANUFACTURED AND MOUNTED FOR AMERICANS WITH DISABILITIES ACT USE. INSULATE SUPPLIES AND P-TRAP.

ELECTRIC WATER HEATER SCHEDULE

MARK	STORAGE CAPACITY	NUMBER OF ELEMENTS	KW PER ELEMENT	ELECTRICAL		
				VOLTS	PHASE	HZ
EWH-1	30 GAL	2 *	4.5	208	1	60

* WIRE FOR NON-SIMULTANEOUS OPERATION

GARBAGE DISPOSAL

MARK	ON/OFF CONTROL	HP	RPM	ELECTRICAL			
				AMPS	VOLTS	PHASE	HZ
GD-1	WALL SWITCH	1/2	1725	6.3	120	1	60

GENERAL NOTES

1. PENETRATIONS OF FIREWALLS, CEILINGS, FLOORS, ETC. OF PLUMBING PIPING SHALL BE UL APPROVED FIRESTOPS AND SHALL BE INSTALLED AS RECOMMENDED BY MANUFACTURER. THE CONTRACTOR SHALL HAVE MANUFACTURER SHOP DRAWINGS ON THE JOB SITE PERTAINING TO ALL PENETRATIONS.
2. THESE CONTRACT DRAWINGS SHOWN GENERAL SIZE AND APPROXIMATE LOCATION OF PLUMBING LINES AND ARE INTENDED TO SHOW THE GENERAL ARRANGEMENTS OF THE UTILITY CONNECTIONS FOR SIZE, LOCATION, DEPTH. INSTALL ALL SYSTEMS IN ACCORDANCE WITH THOSE CONDITIONS FOUND PRIOR TO BEGINNING INSTALLATION. ANY PART OF PLUMBING SYSTEM INSTALLED INCORRECTLY DUE TO NOT VERIFYING SAME SHALL BE REMOVED AND CORRECTLY INSTALLED AT THE EXPENSE OF THE CONTRACTOR.
3. ALL DOMESTIC WATER PIPING SHALL BE LOCATED ABOVE CEILING UNLESS NOTED OTHERWISE.
4. THE CONTRACTOR SHALL NOT CUT ANY STRUCTURAL MEMBERS OF BUILDING WITHOUT PRIOR CONSENT OF THE ARCHITECT.
5. COORDINATE PLUMBING PIPING WITH HVAC DUCTWORK, ROUTE PIPING TO ACCOMMODATE MECHANICAL SYSTEM.
6. THE PLUMBING SYSTEM SHALL BE IN ACCORDANCE WITH THE NATIONAL PLUMBING CODE LATEST APPROVED EDITION.
7. WASTE AND VENT PIPING TO BE PVC-DWV.
8. WATER PIPING TO BE TYPE "K" SOFT DRAWN BELOW GRADE AND TYPE "L" HARD DRAWN ABOVE GRADE. ALL WATER PIPING TO BE INSULATED.
9. ALL WASTE, WATER AND GAS PIPING SHALL BE FIELD VERIFIED PRIOR TO CONSTRUCTION.

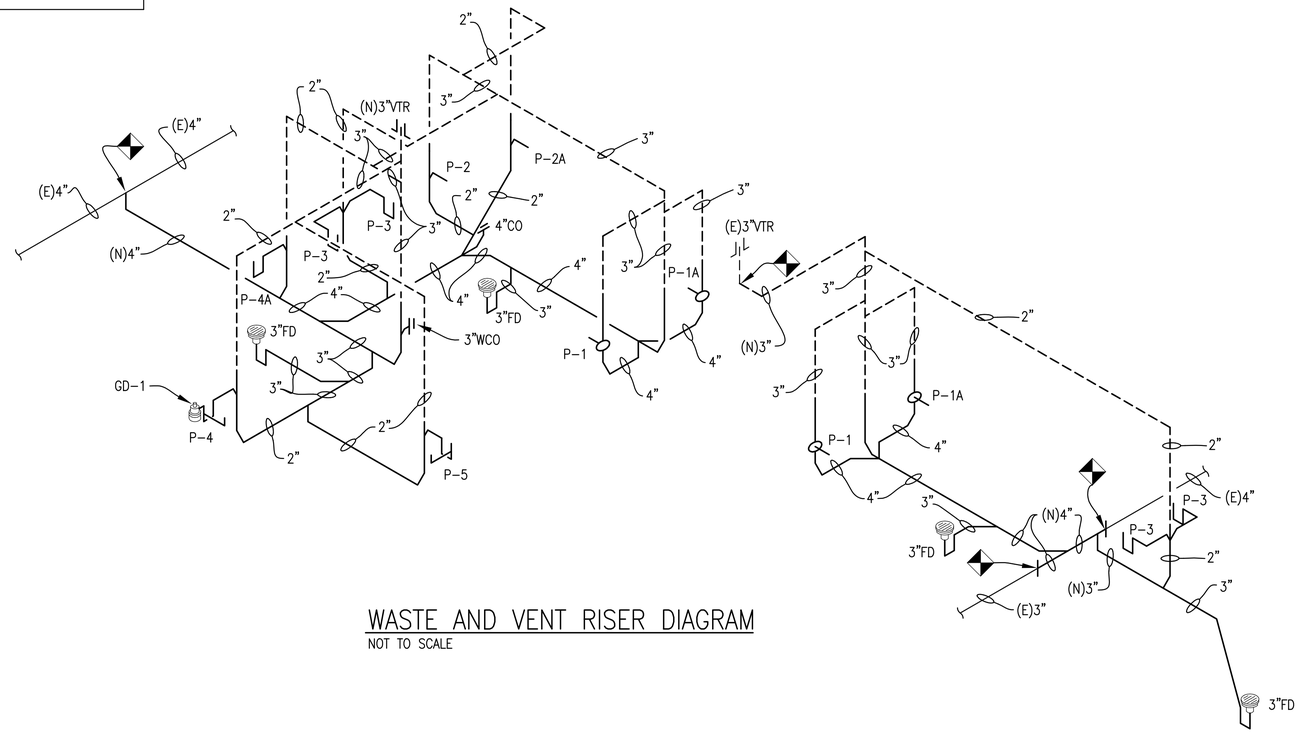

WASTE AND VENT RISER DIAGRAM

NOT TO SCALE

PETERSON ENGINEERING INC.
(PROF. ENG. #: 3600)
75 SOUTH "F" STREET
PENSACOLA, FLORIDA 32502
(850) 434-0513
PEI JOB #17074

100% SUBMITTAL

REV #	DATE	DESCRIPTION

REPAIR BUILDING 90748
23 SOWS

SCHEDULES, NOTES AND RISER DIAGRAM

AIR FORCE SPECIAL OPERATIONS COMMAND
1 SPECIAL OPERATIONS CIVIL ENGINEER SQUADRON
HURLBURT FIELD, FLORIDA

DATE:	16 JAN 2018
DESIGNED BY:	GDP
DRAWN BY:	CAJ
BUILDING NUMBER:	90748
PROJECT NUMBER:	FTEV16-3001
SHEET REFERENCE:	P-601
SHEET NUMBER:	22 OF 48

GREGORY DAMIAN PETERSON — LICENSE NO. 14088 — STATE OF FLORIDA — PROFESSIONAL ENGINEER

D:\PROJECT\2017\17074 Repair Bldg. 90748 SOS\DWG\Plumbing\17074P601.dwg, 1/24/2018 1:22:55 PM, joiner

ABBREVIATIONS

AD – AUTOMATIC DAMPER
ACT – ACOUSTICAL CEILING TILE
AHU – AIR HANDLING UNIT
AMB – AMBIENT
CD – CEILING DIFFUSER
CFH – CUBIC FEET PER HOUR
CFM – CUBIC FEET PER MINUTE
DB – DRY BULB
DDC – DIRECT DIGITAL CONTROL
EAL – EXHAUST AIR LOUVER
EF – EXHAUST FAN
EAG – EXHAUST AIR GRILLE
EAL – EXHAUST AIR LOUVER
EVSD – EMERGENCY VENTILATION SHUTDOWN
EX – EXISTING
FD – FIRE DAMPER
FLR – FLOOR
FT – FEET
GPM – GALLONS PER MINUTE
HOA – HAND–OFF–AUTOMATIC
HP – HORSEPOWER
IAW – IN ACCORDANCE WITH
IPLV – INTEGRATED PART LOAD VALUE
MAX – MAXIMUM
MBTU – THOUSAND BRITISH THERMAL UNIT
MH – MANHOLE
MIN – MINIMUM
MVD – MANUAL VOLUME DAMPER
NIC – NOT IN CONTRACT
OA – OUTSIDE AIR
OAL – OUTSIDE AIR LOUVER
RA – RETURN AIR
RPM – REVOLUTIONS PER MINUTE
SA – SUPPLY AIR
SAR – SUPPLY AIR REGISTER
SPT – STATIC PRESSURE TRANSMITTER
SWR – SIDE WALL REGISTER
SQ FT – SQUARE FEET
T'STAT – THERMOSTAT
TG – TRANSFER GRILLE
TYP – TYPICAL
VAV – VARIABLE AIR VOLUME
VFD – VARIABLE FREQUENCY DRIVE
WB – WET BULB

MECHANICAL NOTES

1. ALL HVAC NOT TO BE REUSED SHALL BE DEMOLISHED. NO ABOVE GROUND HVAC SYSTEM AIR HANDLER, CONDENSER UNITS, FANS, DUCTS, PLUMBING ITEMS, PIPES, CONTROLLERS, DAMPERS, LOUVERS, HANGERS, CONTROLLERS, ACTUATORS, EQUIPMENT PADS OR ANY OTHER HVAC ELEMENT SHALL BE LEFT ABANDONED–IN–PLACE, INCLUDING THOSE THAT MAY ALREADY BE ABANDONED–IN–PLACE.

2. THERMOSTATS INDICATED ADJACENT TO DOORWAYS SHALL BE LOCATED WITHIN 18" OF JAMB. AT LOCATIONS WITH LIGHT SWITCHES, LOCATE T'STAT SUCH THAT LIGHT SWITCH IS BETWEEN T'STAT AND JAMB. T'STATS SHALL BE LOCATED 48" AFF. VERIFY T'STAT LOCATIONS WITH SYSTEMS FURNITURE LAYOUT PRIOR TO INSTALLING ANY T'STAT.

3. LOUVER DIMENSIONS INDICATED DOES NOT INCLUDE FRAME OR FLANGES. APPROXIMATE ROUGH OPENING IN WALL ASSEMBLY IS INDICATED ON ARCHITECTURAL.

4. ACCESS PANELS SHALL BE PROVIDED FOR MAINTENANCE OF EQUIPMENT LOCATED ABOVE HARD CEILINGS OR OTHERWISE CONCEALED.

TYPICAL DUCTWORK & INSULATION NOTES

1. ALL ROUND FLEXIBLE DUCT SHALL BE FACTORY PRE–INSULATED WITH 2" THICK FIBERGLASS INSULATION. MAXIMUM LENGTH OF ANY FLEXIBLE DUCT RUNOUT SHALL BE 6'–0". WHERE LENGTH REQUIRED EXCEEDS 6'–0", INSTALL EXTERNALLY INSULATED ROUND SNAPLOCK DUCT FOR BALANCE OF DISTANCE TO SPIN–IN TAP AT MAIN DUCT TRUNK. NOTE: ALL DUCT PENETRATING WALLS WILL BE INSULATED COMPLETELY THROUGH THE PENETRATIONS.

2. SEAL ALL DUCT PENETRATIONS OF WALLS AIRTIGHT, REGARDLESS OF WHETHER WALLS ARE FIRE RATED OR NOT.

3. ALL SUPPLY AIR DUCTWORK UPSTREAM OF AIR TERMINAL UNITS SHALL BE MEDIUM PRESSURE RECTANGULAR, ROUND, OR FLAT OVAL SPIRAL SEAM AS INDICATED. SMACNA STATIC PRESSURE CLASS 4" W.G., SEAL CLASS A, EXTERNALLY INSULATED.

4. ALL SUPPLY AIR DUCTWORK DOWNSTREAM OF AIR TERMINAL UNITS (EXCEPT TAKEOFFS TO SUPPLY AIR DIFFUSERS) SHALL BE LOW PRESSURE RECTANGULAR, SMACNA STATIC PRESSURE CLASS 1" W.G., SEAL CLASS C, EXTERNALLY INSULATED WITH 2" THICK FIBERGLASS DUCT WRAP.

5. ALL RETURN AIR DUCTWORK SHALL BE LOW PRESSURE RECTANGULAR, SMACNA STATIC PRESSURE CLASS 1" W.G., SEAL CLASS B. DUCT SIZES INDICATED ARE INSIDE CLEAR DIMENSIONS, PROVIDE 2" THICK EXTERNAL FIBERGLASS WRAP.

6. ALL OUTSIDE AIR INTAKE DUCTWORK SHALL BE LOW PRESSURE RECTANGULAR, SMACNA STATIC PRESSURE CLASS 1" W.G., SEAL CLASS B.

7. EXHAUST AIR DUCTWORK SHALL BE LOW PRESSURE RECTANGULAR, SMACNA STATIC PRESSURE CLASS 1/2" W.G., SEAL CLASS B.

8. ALL DUCT SIZES INDICATED ARE INSIDE CLEAR DIMENSIONS.

9. AVOID ROUTING DUCTWORK AND ATU'S OVER LIGHTS WHEREVER POSSIBLE. MAINTAIN MINIMUM 6" CLEARANCE BETWEEN ATU'S AND DUCT INSULATION TO TOP OF LIGHTS. PROVIDE CLEARANCE AND ACCESS ALL AROUND AND BELOW AIR TERMINAL UNITS AS REQUIRED FOR ROUTINE MAINTENANCE. AIR TERMINAL UNITS, (ATU) SHOULD NOT BE INSTALLED MORE THAN 20" ABOVE CEILING TO ALLOW ACCESS FOR MAINTENANCE. CATWALKS AND WORKING PLATFORMS TO AND AROUND THE ATU'S WILL BE PROVIDED IF THE ATU IS MOUNTED AT AN ELEVATION THAT DOES NOT ALLOW ACCESS THROUGH THE LAY–IN CEILING WITHOUT DISASSEMBLY OF THE CEILING GRID.

LEGEND

WxH — RECTANGULAR DUCTWORK, SIZES SHOWN ARE INTERNAL CLEAR DIMENSIONS. (WIDTH x HEIGHT) FIRST FIGURE IS SIDE SHOWN.

8"ø — ROUND SNAPLOCK GALVANIZED STEEL DUCTWORK, EXTERNALLY INSULATED, SMACNA STATIC PRESSURE CONSTRUCTION CLASS 1/2" w.g., SEAL CLASS C. SIZE SHOWN IS SHEET METAL DIAMETER. SHALL BE USED ONLY AT RUNOUTS TO AIR OUTLETS.

FACTORY FABRICATED/INSULATED FLEXIBLE ROUND DUCT, SIZE SHOWN IS INSIDE DIAMETER.

16"ø — ROUND SPIRAL SEAM GALVANIZED STEEL DUCTWORK, EXTERNALLY INSULATED. SIZE SHOWN IS SHEET METAL DIAMETER. SMACNA STATIC PRESSURE CLASS 4" W.G., SEAL CLASS A.

SQUARE THROAT ELBOW IN RECTANGULAR DUCT WITH DOUBLE WALL TURNING VANES.

LONG RADIUS ELBOW IN RECTANGULAR DUCT.

FLEXIBLE DUCT CONNECTION

TRANSITION

RECTANGULAR TO ROUND DUCT TRANSITION.

RECTANGULAR BRANCH DUCT TAKE OFF FROM RECTANGULAR DUCT MAIN WITH 45° COLLAR.

RECTANGULAR DUCTWORK TURNING 90° UP.

RECTANGULAR DUCTWORK TURNING 90° DOWN.

8"ø CD 220 CFM — CEILING DIFFUSER WITH 24"x24" FACE. PROVIDE SURFACE MOUNT STYLE FOR GYPSUM BOARD CEILINGS AND LAY–IN TYPE AT T–BAR CEILING GRID. ROUND NECK SIZE AND AIRFLOW AS INDICATED. 4–WAY DIRECTION OF THROW. PROVIDE WITH OPPOSED BLADE VOLUME CONTROL DAMPER. BACK FACE OF DIFFUSER SHALL HAVE INSULATION BLANKET.

ROUND BRANCH DUCT TAKEOFF FROM RECTANGULAR DUCT MAIN. BRANCH DUCT SHALL BE FLEXIBLE ROUND DUCT OR ROUND SNAPLOCK DUCT AS INDICATED. ROUND DUCT TAP IN SHALL BE MADE WITH SCOOP AND STANDOFF WITH MANUAL VOLUME DAMPER. MANUAL VOLUME DAMPER SHALL HAVE LOCKING QUADRANTS.

TS — TEMPERATURE SENSOR

SPT — STATIC PRESSURE TRANSMITTER

FD / DUCT — FIRE DAMPER WITH ACCESS PANEL PANEL TO BE MINIMUM, 12"x12" AND AS LARGE AS 20"x20". IF THE PANEL CANNOT BE 20"x20" IT SHALL BE 2" NARROWER THAN THE DUCT SIZE.

TRANSITION POINT IN CHWS/R OR HWS/R PIPING

LETTER INDICATES SECTION

SHEET WHERE SECTION IS DRAWN

DUCTWORK TO BE DEMOLISHED

SD — SMOKE DETECTOR

BUTTERFLY VALVE FOR SHUTOFF SERVICE

GAGE FITTING W/COCK

GATE VALVE

STRAINER WITH VALVE AND BLOWDOWN

PRV — PRESSURE REDUCING VALVE

AUTOMATIC AIR VENT WITH GAGE COCK. ROUTE 1/4" SOFT COPPER TUBING FROM DISCHARGE TO FLOOR DRAIN UNLESS OTHERWISE INDICATED.

AUTOMATIC 3–WAY ELECTRIC CONTROL VALVE

AUTOMATIC 2–WAY ELECTRIC CONTROL VALVE

FLEXIBLE PIPE CONNECTOR

PRESSURE GAGE WITH GAGE COCK

P/T — COMBINATION PRESSURE AND TEMPERATURE TEST PLUG WITH EXTENDED NECK AND CAP

TRIPLE DUTY VALVE

AUTOMATIC FLOW CONTROL VALVE

ELBOW TURN UP

ELBOW TURN DOWN

CONNECTION, TOP

CONNECTION, BOTTOM

FRAME MOUNTED PUMP

DIFFERENTIAL PRESSURE SWITCH

AI — ANALOG INPUT INTO CONTROL PANEL

AO — ANALOG OUTPUT INTO CONTROL PANEL

DI — DIGITIAL INPUT INTO CONTROL PANEL

DO — DIGITIAL OUTPUT INTO CONTROL PANEL

MS — MOTOR STARTER

VFD — VARIABLE FREQUENCY DRIVE

DDC — DIRECT DIGITAL CONTROL PANEL

AIR TERMINAL UNIT

T # — SPACE THERMOSTAT SERVING UNIT #, MOUNT 48" A.F.F.

E — EMERGENCY SHUT–DOWN SWITCH, MOUNT 48" A.F.F.

MANUAL VOLUME DAMPER, PROVIDE WITH LOCKING QUADRANT

NEW CONNECTION POINT

LIMIT OF DEMOLITION

PETERSON ENGINEERING INC.
(PROF. ENG. #: 3600)
75 SOUTH "F" STREET
PENSACLE, FLORIDA 32502
(850) 434–0513
PEI JOB #17074

GREGORY DAMIAN PETERSON — LICENSE NO. 74088 — STATE OF FLORIDA — PROFESSIONAL ENGINEER

100% SUBMITTAL

REV #	DATE	DESCRIPTION

REPAIR BUILDING 90748
23 SOWS

GENERAL MECHANICAL INFORMATION

AIR FORCE SPECIAL OPERATIONS COMMAND
1 SPECIAL OPERATIONS CIVIL ENGINEER SQUADRON
HURLBURT FIELD, FLORIDA

DATE: 16 JAN 2018
DESIGNED BY: GDP
DRAWN BY: DJM
BUILDING NUMBER: 90748
PROJECT NUMBER: FTEV16-3001
SHEET REFERENCE: M-001
SHEET NUMBER: 23 OF 48

D:\PROJECT\2017\17074 Repair Bldg. 90748 SOS\DWG\Mech\M-001.dwg, 1/24/2018 1:23:00 PM, joiner

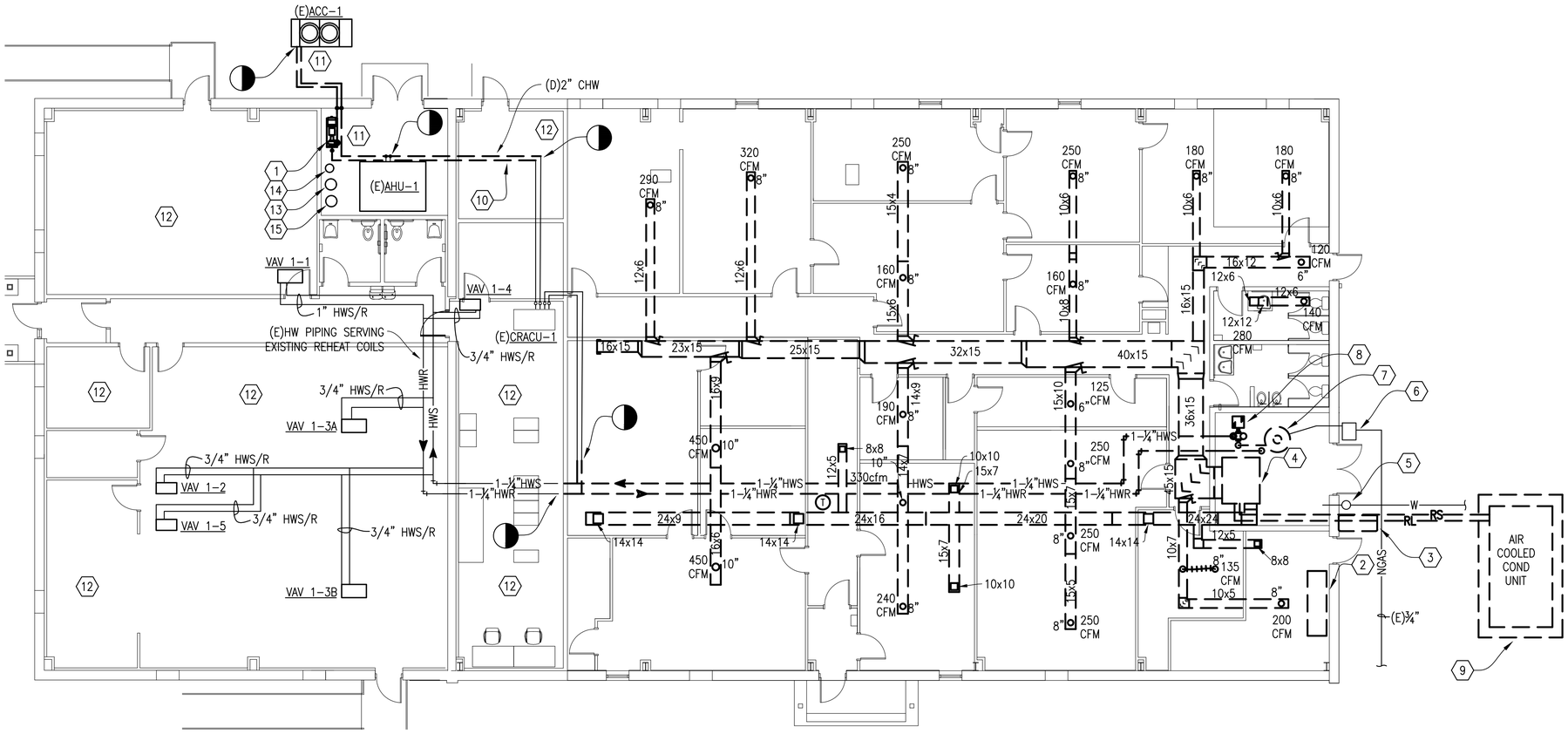

FIRST FLOOR MECHANICAL DEMOLITION PLAN
SCALE: 1/8" = 1'-0"

SHEET NOTES

1. REMOVE CHWP-1
2. REMOVE LEIBERT FCU
3. REMOVE LEIBERT CONDENSING UNIT
4. REMOVE AHU-2 AND ALL ASSOCIATED DUCTWORK, PIPING, AND CONTROLS.
5. EXISTING WATER METER TO REMAIN
6. EXISTING GAS METER TO REMAIN
7. REMOVE B-1 AND HOT WATER PIPING TO POINT INDICATED. RECONNECT EXISTING HOT WATER PIPING SERVING SOUTH SIDE OF BUILDING.
8. REMOVE HWP-1
9. REMOVE CU-2
10. REMOVE EXISTING CHILLED WATER PIPING TO POINTS INDICATED.
11. INSTALL NEW AIR COOLED CHILLER, CHILLED WATER PUMP, AND CHILLED WATER PIPING FIRST, SO THAT EXISTING HVAC EQUIPMENT IN EXISTING TO REMAIN PORTION OF THE BUILDING CAN BE USED AS SOON AS POSSIBLE TO CONDITION THE INTERIOR SPACES. CONTRACTOR TO COORDINATE NIGHTS/WEEKEND WORK TO BRING SYSTEMS BACK UP AS SOON AS POSSIBLE.
12. SOUTH END OF THE BUILDING IS TO BE OCCUPIED DURING CONSTRUCTION. CONTRACTOR MUST MAINTAIN HEATING AND COOLING TO THESE SPACES WHENEVER THE BUILDING IS OCCUPIED. EXISTING SERVER ROOM SHALL BE CONDITIONED 24 HOURS, 7 DAYS A WEEK. MAINTAIN MINIMUM 76°F/60% RH IN COOLING MODE AND 68°F IN HEATING MODE. CONTRACTOR MAY WORK NIGHTS OR WEEKENDS AS REQUIRED. SUBMIT PHASING PLAN TO GOVERNMENT FOR APPROVAL.
13. REMOVE EXISTING AIR SEPARATOR.
14. REMOVE EXISTING EXPANSION TANK.
15. EXISTING TO REMAIN CHEMICAL FEEDER.

8' 0' 8' 16'
SCALE: 1/8"=1'-0"

PETERSON ENGINEERING INC.
(PROF. ENG. #: 3600)
75 SOUTH "F" STREET
PENSACOLA, FLORIDA 32502
(850) 434-0513
PEI JOB #17074

100% SUBMITTAL

REV #	DATE	DESCRIPTION

REPAIR BUILDING 90748
23 SOWS

HVAC FLOOR PLAN - DEMOLITION

AIR FORCE SPECIAL OPERATIONS COMMAND
1 SPECIAL OPERATIONS CIVIL ENGINEER SQUADRON
HURLBURT FIELD, FLORIDA

DATE:	16 JAN 2018
DESIGNED BY:	GDP
DRAWN BY:	DJM
BUILDING NUMBER:	90748
PROJECT NUMBER:	FTEV16-3001
SHEET REFERENCE:	M-101
SHEET NUMBER:	24 OF 48

GREGORY DAMIAN PETERSON LICENSE 44088 STATE OF FLORIDA PROFESSIONAL ENGINEER
1/16/18

D:\PROJECT\2017\17074 Repair Bldg. 90748 SOS\DWG\Mech\M-101.dwg, 1/24/2018 1:23:05 PM, joiner

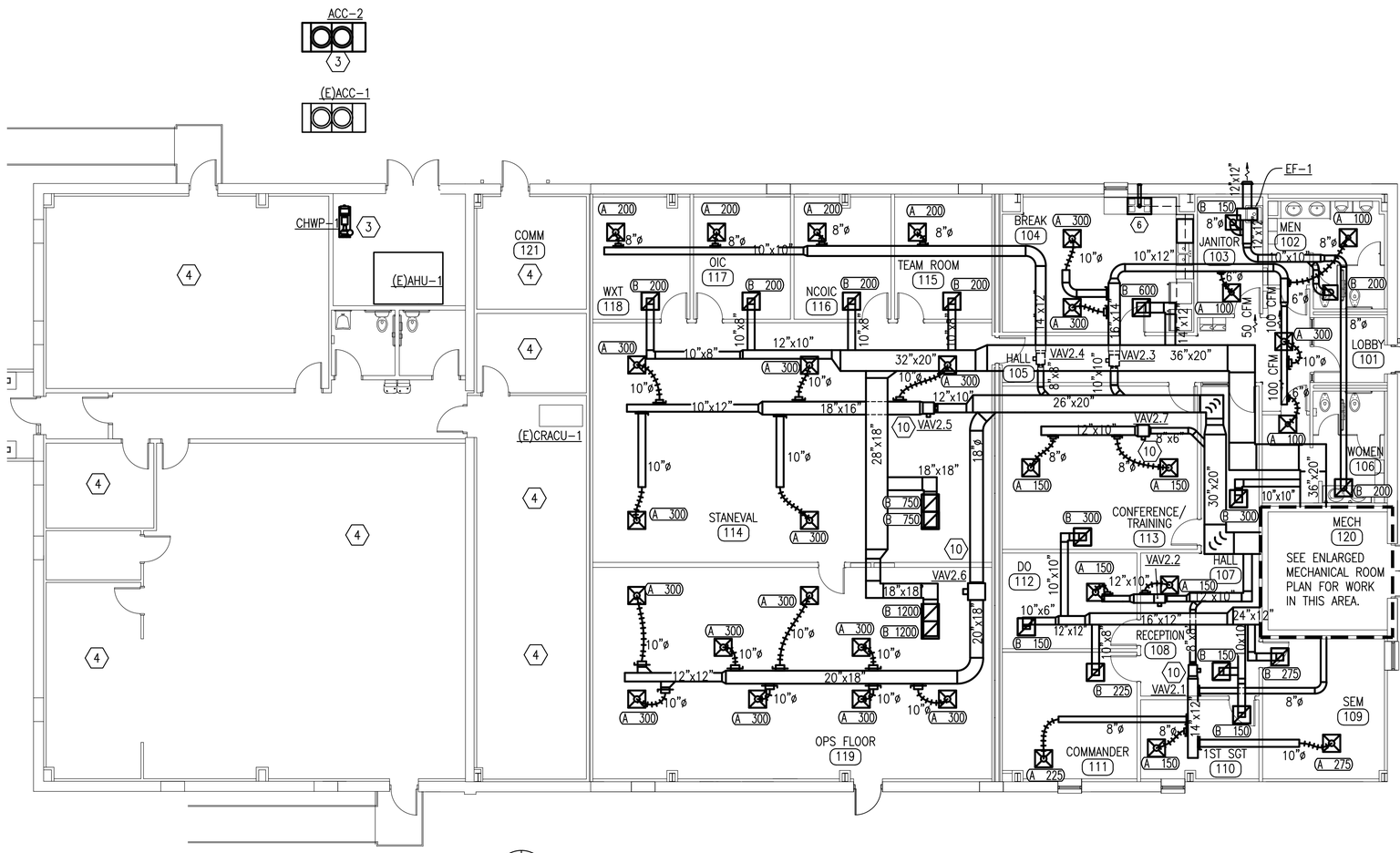

FIRST FLOOR DUCTWORK NEW WORK PLAN

SCALE: 1/8" = 1'-0"

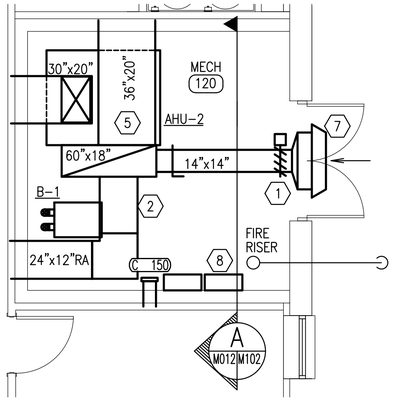

ENLARGED MECHANICAL ROOM PLAN

SCALE: 1/4" = 1'-0"

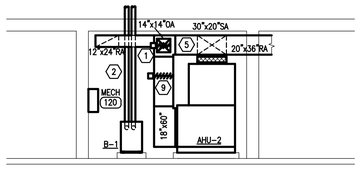

MECHANICAL ROOM SECTION A

SCALE: 1/4" = 1'-0"

SHEET NOTES

1. AUTOMATIC LOW LEAKAGE OUTSIDE AIR DAMPER WITH EBTRON GOLD FLOW MONITORING STATION. TIE INTO EXISTING DDC PANEL. DAMPER SHALL BE EXTRUDED ALUMINUM.
2. INSTALL NEW FLUE AND COMBUSTION AIR WITH NEW ROOF PENETRATIONS FOR B-1. PATCH EXISTING FLUE PENETRATION.
3. INSTALL NEW AIR COOLED CHILLER, CHILLED WATER PUMP, AND CHILLED WATER PIPING FIRST, SO THAT EXISTING HVAC EQUIPMENT IN EXISTING TO REMAIN PORTION OF THE BUILDING CAN BE USED AS SOON AS POSSIBLE TO CONDITION THE INTERIOR SPACES. CONTRACTOR TO COORDINATE NIGHTS/WEEKEND WORK TO BRING SYSTEMS BACK UP AS SOON AS POSSIBLE.
4. SOUTH END OF THE BUILDING IS TO BE OCCUPIED DURING CONSTRUCTION. CONTRACTOR MUST MAINTAIN HEATING AND COOLING TO THESE SPACES WHENEVER THE BUILDING IS OCCUPIED. EXISTING SERVER ROOM SHALL BE CONDITIONED 24 HOURS, 7 DAYS A WEEK. MAINTAIN MINIMUM 76°F/60% RH IN COOLING MODE AND 68°F IN HEATING MODE. CONTRACTOR MAY WORK NIGHTS OR WEEKENDS AS REQUIRED. SUBMIT PHASING PLAN TO GOVERNMENT FOR APPROVAL.
5. PROVIDE A DUCT SMOKE DETECTOR IN RETURN AIR MAIN AND A DUCT SMOKE DETECTOR IN SUPPLY AIR MAIN FOR AHU-2.
6. CONTRACTOR TO PROVIDE NEW STOVE TOP HOOD WITH INTEGRAL CHEMICAL FIRE SUPPRESSION SYSTEM. ROUTE NEW 6" EXHAUST DUCT TO EXTERIOR WITH VENT. EXHAUST DUCT SHALL BE AIR TIGHT.
7. 36"X18" OUTSIDE AIR LOUVER. 700 CFM, MINIMUM 1.4 SQUARE FEET OF FREE AREA.
8. EXISTING DDC PANEL.
9. AUTOMATIC LOW LEAKAGE RETURN DAMPER WITH EBRON GOLD FLOW MONITORING STATION. TIE INTO EXISTING DDC PANEL. DAMPER SHALL BE EXTRUDED ALUMINUM.
10. PROVIDE ACCESS PANEL IN DUCTWORK AT THE INLET SIDE OF EACH VAV BOX. (TYP)

5' 0 5'

1/4"= 1'-0"

8' 0' 8' 16'

SCALE: 1/8"=1'-0"

PETERSON ENGINEERING INC.
(PROF. ENG. #: 3600)
75 SOUTH "F" STREET
PENSACOLA, FLORIDA 32502
(850) 434-0513
PEI JOB #17074

100% SUBMITTAL

REV #	DATE	DESCRIPTION

REPAIR BUILDING 90748
23 SOWS

HVAC DUCTWORK PLAN - NEW WORK

AIR FORCE SPECIAL OPERATIONS COMMAND
1 SPECIAL OPERATIONS CIVIL ENGINEER SQUADRON
HURLBURT FIELD, FLORIDA

GREGORY DAMIAN PETERSON LICENSED 44088 STATE OF FLORIDA PROFESSIONAL ENGINEER

DATE:	16 JAN 2018
DESIGNED BY:	GDP
DRAWN BY:	DJM
BUILDING NUMBER:	90748
PROJECT NUMBER:	FTEV16-3001
SHEET REFERENCE:	M-102
SHEET NUMBER:	25 OF 48

D:\PROJECT\2017\17074 Repair Bldg. 90748 SOS\DWG\Mech\M-102.dwg, 1/24/2018 1:23:11 PM, joiner

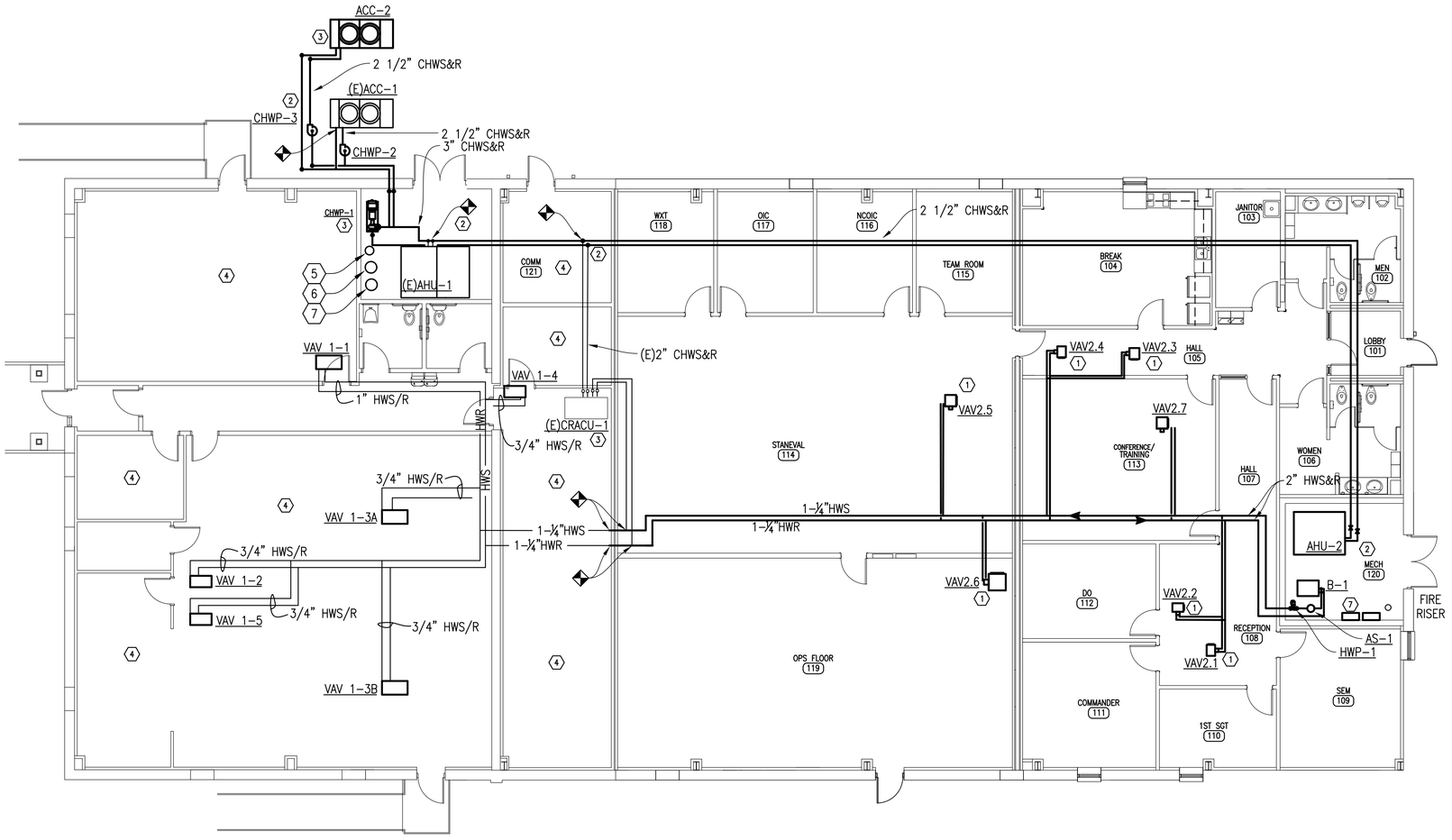

FIRST FLOOR PIPING NEW WORK PLAN

SCALE: 1/8" = 1'-0"

SHEET NOTES

1. PROVIDE 3-WAY CONTROL VALVES FOR ALL VAV BOXES.
2. PROVIDE CHW ISOLATION VALVES FOR ALL CHW EQUIPMENT.
3. INSTALL NEW AIR COOLED CHILLER, CHILLED WATER PUMP, AND CHILLED WATER PIPING FIRST, SO THAT EXISTING HVAC EQUIPMENT IN EXISTING TO REMAIN PORTION OF THE BUILDING CAN BE USED AS SOON AS POSSIBLE TO CONDITION THE INTERIOR SPACES. CONTRACTOR TO COORDINATE NIGHTS/WEEKEND WORK TO BRING SYSTEMS BACK UP AS SOON AS POSSIBLE.
4. SOUTH END OF THE BUILDING IS TO BE OCCUPIED DURING CONSTRUCTION. CONTRACTOR MUST MAINTAIN HEATING AND COOLING TO THESE SPACES WHENEVER THE BUILDING IS OCCUPIED. EXISTING SERVER ROOM SHALL BE CONDITIONED 24 HOURS, 7 DAYS A WEEK. MAINTAIN MINIMUM 76°F/60% RH IN COOLING MODE AND 68°F IN HEATING MODE. CONTRACTOR MAY WORK NIGHTS OR WEEKENDS AS REQUIRED. SUBMIT PHASING PLAN TO GOVERNMENT FOR APPROVAL.
5. NEW EXPANSION TANK ET-2.
6. NEW AIR SEPARATOR AS-2.
7. EXISTING TO REMAIN CHEMICAL FEEDER.
8. EXISTING DDC PANEL.

8' 0' 8' 16'
SCALE: 1/8"=1'-0"

PETERSON ENGINEERING INC.
(PROF. ENG. #: 3600)
75 SOUTH "F" STREET
PENSACOLA, FLORIDA 32502
(850) 434-0513
PEI JOB #17074

100% SUBMITTAL

REPAIR BUILDING 90748
23 SOWS

HVAC PIPING PLAN - NEW WORK

REV #	DATE	DESCRIPTION

AIR FORCE SPECIAL OPERATIONS COMMAND
1 SPECIAL OPERATIONS CIVIL ENGINEER SQUADRON
HURLBURT FIELD, FLORIDA

DATE: 16 JAN 2018
DESIGNED BY: GDP
DRAWN BY: DJM
BUILDING NUMBER: 90748
PROJECT NUMBER: FTEV16-3001
SHEET REFERENCE: M-103
SHEET NUMBER: 26 OF 48

GREGORY DAMIAN PETERSON LICENSE NO. 74088 STATE OF FLORIDA PROFESSIONAL ENGINEER

D:\PROJECT\2017\17074 Repair Bldg. 90748 SOS\DWG\Mech\M-103.dwg, 1/24/2018 1:23:17 PM, joiner

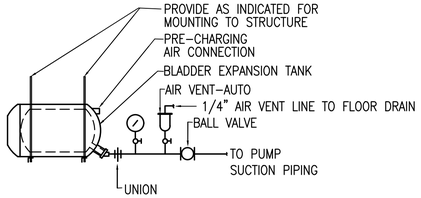

EXPANSION TANK DETAIL

NOT TO SCALE

NOTE: LOCATE SYSTEM PIPING CONNECTION BELOW THE CENTER LINE OF TANK.

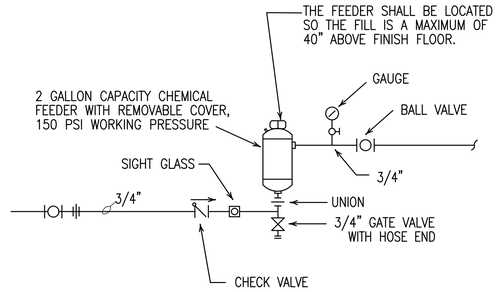

TYPICAL CHEMICAL FEEDER CONNECTION DETAIL

NOT TO SCALE

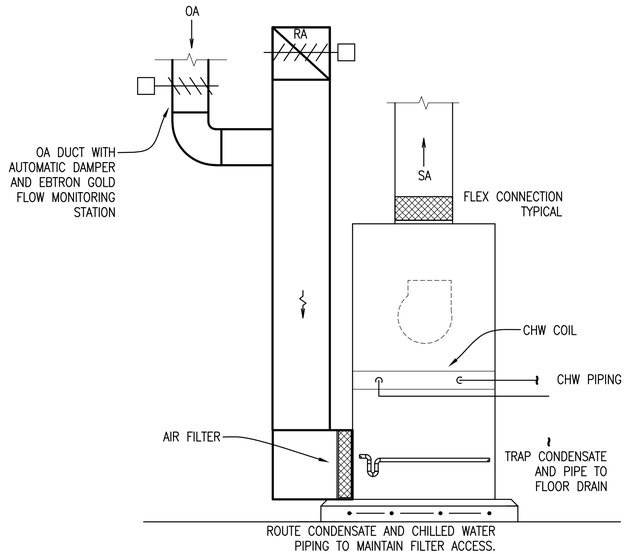

AHU MOUNTING DETAIL

NOT TO SCALE

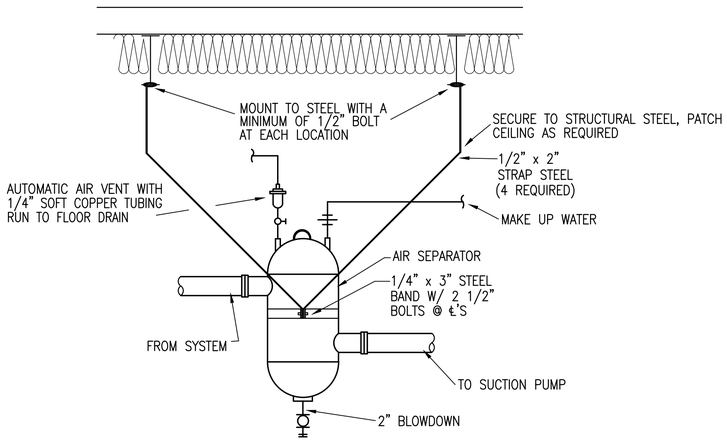

AIR SEPARATOR DETAIL

NOT TO SCALE

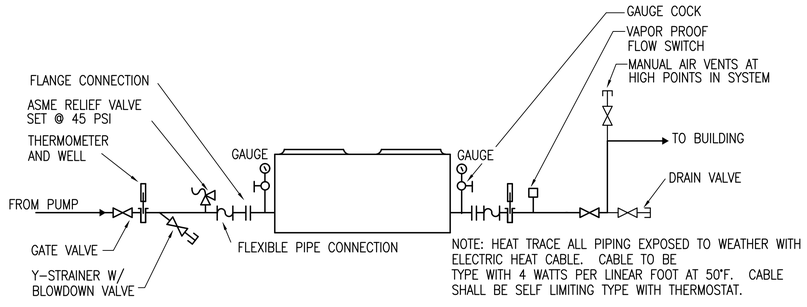

AIR COOLED CHILLER PIPING DIAGRAM

NOT TO SCALE

PETERSON ENGINEERING INC.
(PROF. ENG. #: 3600)
75 SOUTH "F" STREET
PENSACOLA, FLORIDA 32502
(850) 434-0513
PEI JOB #17074

100% SUBMITTAL

REV #	DATE	DESCRIPTION

REPAIR BUILDING 90748
23 SOWS

MECHANICAL DETAILS

AIR FORCE SPECIAL OPERATIONS COMMAND
1 SPECIAL OPERATIONS CIVIL ENGINEER SQUADRON
HURLBURT FIELD, FLORIDA

DATE:	16 JAN 2018
DESIGNED BY:	GDP
DRAWN BY:	DJM
BUILDING NUMBER:	90748
PROJECT NUMBER:	FTEV16-3001
SHEET REFERENCE:	M-501
SHEET NUMBER:	27 OF 48

GREGORY DAMIAN PETERSON LICENSE NO. 74088 STATE OF FLORIDA PROFESSIONAL ENGINEER

D:\PROJECT\2017\17074 Repair Bldg. 90748 SOS\DWG\Mech\M-501.dwg, 1/24/2018 1:23:22 PM, joiner

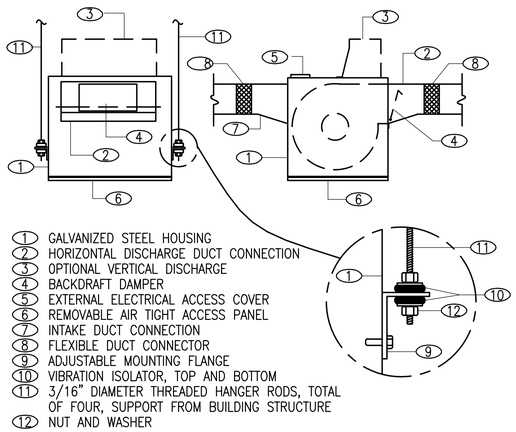

INLINE EXHAUST FAN DETAIL

NOT TO SCALE

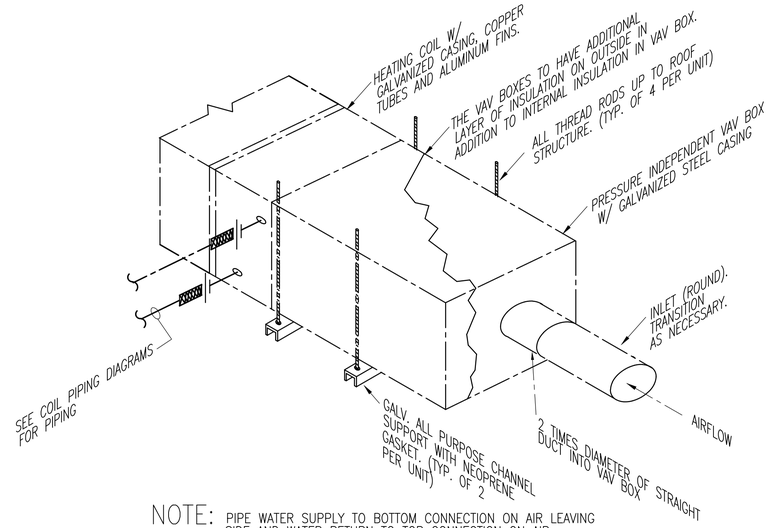

NOTE: PIPE WATER SUPPLY TO BOTTOM CONNECTION ON AIR LEAVING SIDE AND WATER RETURN TO TOP CONNECTION ON AIR ENTERING SIDE.

TYPICAL VAV TERMINAL UNIT HANGER DETAIL

NOT TO SCALE

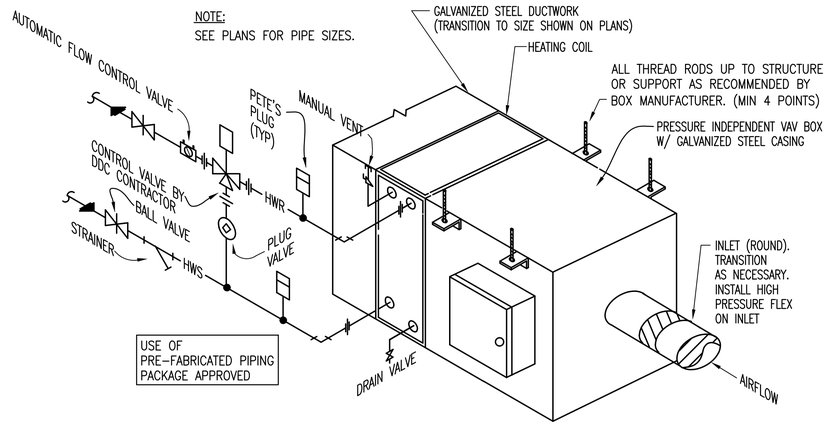

TYPICAL VAV TERMINAL UNIT W/HW REHEAT COIL AND 3-WAY VALVE DETAIL

NOT TO SCALE

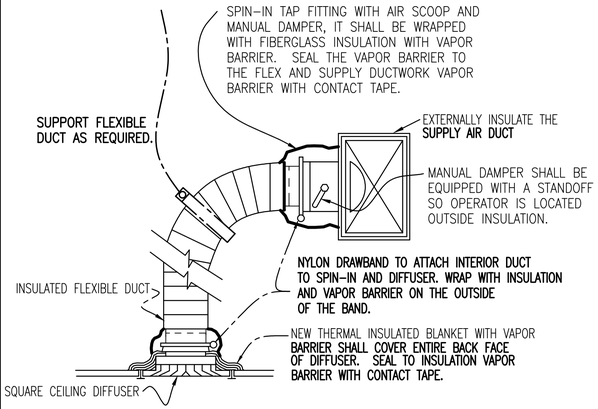

PANEL DIFFUSER DETAIL

NOT TO SCALE

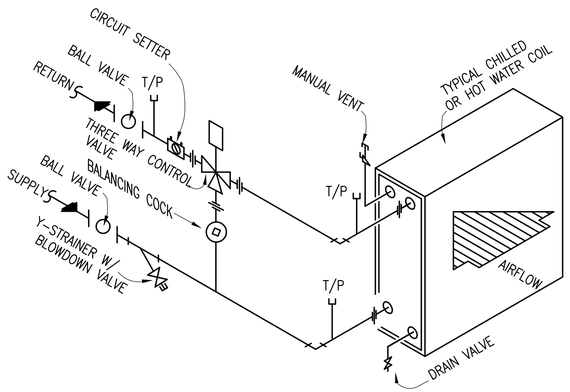

THREE WAY VALVE PIPING DIAGRAM

PIPING 2" AND SMALLER

TYPICAL COIL CONNECTION DETAIL

NOT TO SCALE

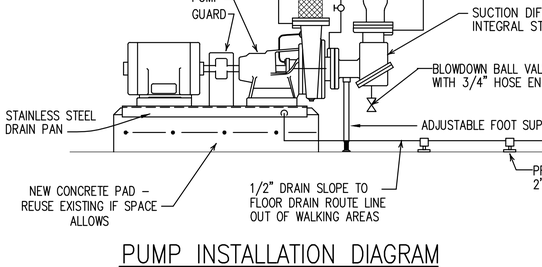

PUMP INSTALLATION DIAGRAM

N.T.S.

NOTE

12" SPOOL, TRIPLE DUTY VALVE AND FLEXIBLE CONNECTOR AT PUMP DISCHARGE SHALL BE THE SAME SIZE AS THE PUMP DISCHARGE. ALL OTHER PIPING AND VALVES SHALL BE SIZED AS SHOWN ON MECHANICAL PLANS.

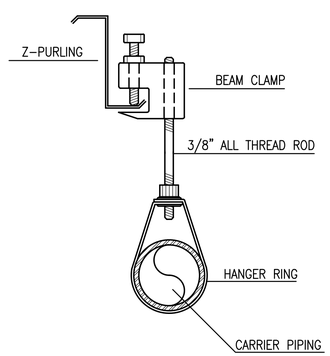

PIPE HANGER DETAIL

N.T.S.

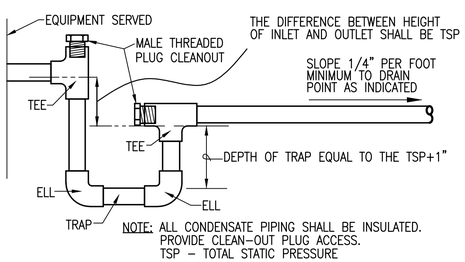

TYPICAL CONDENSATE DRAIN DETAIL DRAW THROUGH UNIT

NOT TO SCALE

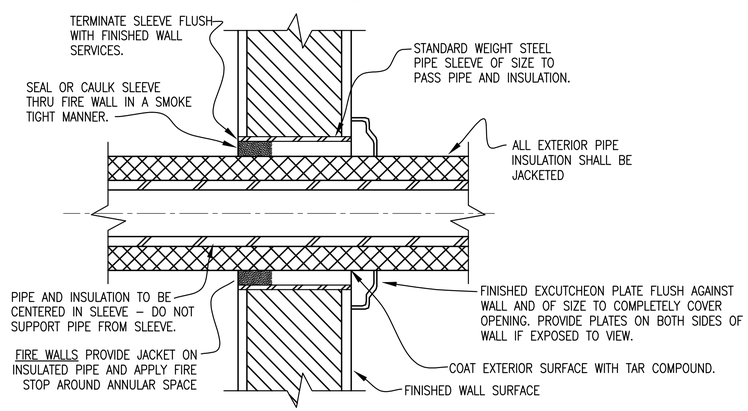

TYPICAL EXISTING EXTERIOR WALL PIPE SLEEVE DETAIL

NOT TO SCALE

PETERSON ENGINEERING INC.
(PROF. ENG. #: 3600)
75 SOUTH "F" STREET
PENSACOLA, FLORIDA 32502
(850) 434-0513
PEI JOB #17074

GREGORY DAMIAN PETERSON LICENSE NO. 74088 STATE OF FLORIDA PROFESSIONAL ENGINEER

100% SUBMITTAL

REPAIR BUILDING 90748
23 SOWS

MECHANICAL DETAILS

REV #	DATE	DESCRIPTION

AIR FORCE SPECIAL OPERATIONS COMMAND
1 SPECIAL OPERATIONS CIVIL ENGINEER SQUADRON
HURLBURT FIELD, FLORIDA

DATE: 16 JAN 2018
DESIGNED BY: GDP
DRAWN BY: DJM
BUILDING NUMBER: 90748
PROJECT NUMBER: FTEV16-3001
SHEET REFERENCE: M-502
SHEET NUMBER: 28 OF 48

D:\PROJECT\2017\17074 Repair Bldg. 90748 SOS\DWG\Mech\M-502.dwg, 1/24/2018 1:23:26 PM, joiner

PACKAGE AIR COOLED WATER CHILLER SCHEDULE

MARK	MINIMUM CAPACITY TONS	REFRIG. TYPE	MINIMUM EER	EVAPORATOR DATA				CONDENSER DATA			COMPRESSOR DATA			ELECTRICAL DATA					
				WATER FLOW GPM	ENTERING WATER TEMP. °F	LEAVING WATER TEMP. °F	MAX. WATER PRESS. DROP FEET H_2O	AMB. TEMP. °F db	LOW AMB. TEMP. °F db	CONDENSER FANS QUANTITY/KW	MIN. COMP. QUANT.	CAPACITY REDUCTION		MCA	MOCP	VOLTS	PHASE	HERTZ	REMARKS
												MINIMUM UNLOADING	APPROX. STEPS PERCENT						
ACC-1	30	R-410A	10.1	59	54	44	20.0	95	20	3/3.5	2	50%	2 @ 50% EA.	137.6	175	208	3	60	ACC-1 IS EXISTING TO REMAIN
ACC-2	30	R-410A	10.1	59	54	44	20.0	95	20	3/3.5	2	50%	2 @ 50% EA.	137.6	175	208	3	60	

1. PROVIDE WITH FACTORY INTEGRAL CONTROLS AND BACNET INTERFACE FOR DDC CONTROL/MONITORING. PROVIDE CHILLER WITH TWO COMPLETELY INDEPENDENT REFRIGERANT CIRCUITS.
2. PROVIDE A SINGLE POINT POWER CONNECTION TO THE CHILLER.
3. PROVIDE INDEPENDENT CIRCUIT FOR HEAT TRACE TAPE.
4. PROVIDE FACTORY MOUNTED DISCONNECT SWITCH AND POWER SUPPLY MONITOR.
5. PROVIDE UNIT WITH COIL COATING AND COIL GUARDS.
6. THE IPLV EER SHALL BE 15.0 MIN
7. THE MAXIMUM SOUND POWER LEVEL SHALL BE 90dBA

CHILLED WATER VARIABLE AIR VOLUME AIR HANDLING UNIT SCHEDULE

MARK	FAN DATA									CHILLED WATER COOLING COIL DATA											FILTER DATA			
	TYPE	SUPPLY AIR CFM MIN/MAX	HEATING AIR CFM	OUTSIDE AIR CFM	E.S.P. IN. H_2O	FAN HP	ELECTRICAL DATA			MAX. FACE VEL FPM	TOT. COOLING CAP. MBTU/HR	SENSIBLE COOLING CAP. MBTU/HR	ENTERING AIR TEMP.		LEAVING AIR TEMP.		CHILLED WATER DATA		MAX WPD FT	CONTROL VALVE		MAX. FACE VEL. FPM	TYPE	THICK	REMARKS
							VOLTS	PHASE	HERTZ				°Fdb	°Fwb	°Fdb	°Fwb	GPM	°F ENT.		TYPE	Cv				
AHU-2	VDT	2200/7300	NA	700	2.5	15	208	3	60	550	276	197	77.1	63.4	53	52	55	44	8	3-WAY	22	500	T-AWAY	2"	BELOW

LEGEND:
HBT – HORIZONTAL BLOW THRU
HDT – HORIZONTAL DRAW THRU
MTZ – MULTI-ZONE
VDT – VERTICAL DRAW THRU

REMARKS:
-SUPPLY FAN SHALL BE DIRECT DRIVE
-COOLING COIL SHALL BE COPPER TUBE/ALUMINUM FIN.
-PROVIDE EXTENDED LUBE LINES TO OUTSIDE OF UNIT CASING ON THE SIDE WHICH IS ACCESSIBLE FOR SERVICING ON ALL UNITS.
-DUCT SMOKE DETECTOR SHALL BE INSTALLED IN SUPPLY AND RETURN DUCTWORK.

REMARKS:
-ADJUST LOCATION OF UNITS IN MECHANICAL ROOMS AS REQUIRED FOR SERVICE AS RECOMMENDED BY MANUFACTURER.
-PIPE ALL CONDENSATE FROM UNITS TO DRAIN WITH TRAP.
-UV LIGHTS SHALL BE PROVIDED AND INSTALLED DOWNSTREAM OF COOLING COILS.
-PROVIDE AHU WITH VFD MOUNTED TO THE AHU.

AHU-2 VARIABLE AIR VOLUME BOX SCHEDULE

SERVED BY	ZONE MARK VAV-	INLET (4) SIZE ø"	COOLING AIR FLOW		MAX. STATIC PRESSURE (2) DROP(IN.W.C.)	APPROX. DOWNSTREAM STATIC PRESS. (IN.W.C.)	CFM (HEATING)	HOT WATER REHEAT COIL						CONTROL VALVE
			MAX	MIN				AIR TEMP °F		HTG. CAP. MBH	WATER TEMP °F		WATER QTY. (~)GPM	
								ENT	LVG		ENT	LVG		
AHU-2	VAV2-1	10"	800	250	0.25"	0.20"	250	55	90	9.2	130	100	1.0	3-WAY
AHU-2	VAV2-2	10"	300	100	0.25"	0.20"	100	55	90	3.5	130	100	0.5	3-WAY
AHU-2	VAV2-3	12"	1200	375	0.25"	0.20"	375	55	90	13.9	130	100	1.0	3-WAY
AHU-2	VAV2-4	10"	800	250	0.25"	0.20"	250	55	90	9.2	130	100	1.0	3-WAY
AHU-2	VAV2-5	14"	1500	450	0.25"	0.20"	450	55	90	17.3	130	100	1.5	3-WAY
AHU-2	VAV2-6	18"	2400	720	0.25"	0.20"	720	55	90	27.7	130	100	1.5	3-WAY
AHU-2	VAV2-7	8"	300	100	0.25"	0.20"	100	55	90	3.5	130	100	0.5	3-WAY

(1) MAXIMUM STATIC PRESSURE DROP INCLUDES VAV BOX AND HOT WATER COIL
(2) PRESSURE INDEPENDENT TYPE
(3) VAV BOX CONTROLS SHALL BE FACTORY MTD. TRANSFORMERS AND SERVICE SWITCHES TO BE PROVIDED BY BOX MANUFACTURER.
(4) MINIMUM INLET CONNECTION ACCEPTABLE, 450 fpm @ MIN. FLOW.
(5) EACH VAV BOX TO BE POWERED WITH LOW VOLTAGE CABLE FROM STEP DOWN TRANSFORMERS PROVIDED BY DDC CONTRACTOR LOCATED IN RESPECTIVE AHU MECH ROOMS. POWER TO TRANSFORMERS BY DIV 26 IN AHU MECH ROOMS.

AHU-1 VARIABLE AIR VOLUME BOX SCHEDULE

SERVED BY	ZONE MARK VAV-	INLET SIZE ø"	COOLING AIR FLOW		CFM (HEATING)	HOT WATER REHEAT COIL						CONTROL VALVE
			MAX	MIN		AIR TEMP °F		HTG. CAP. MBH	WATER TEMP °F		WATER QTY. (~)GPM	
						ENT	LVG		ENT	LVG		
AHU-1	1-1	14	2030	410	820	55	95	36.6	130	100	4.0	3-WAY
AHU-1	1-2	5	250	50	100	55	95	5.6	130	100	1.0	3-WAY
AHU-1	1-3A	12	1815	360	730	55	95	28.3	130	100	3.0	3-WAY
AHU-1	1-3A	12	1815	360	730	55	95	28.3	130	100	3.0	3-WAY
AHU-1	1-4	4	210	60	110	55	95	6.4	130	100	1.0	3-WAY
AHU-1	1-5	7	510	60	210	55	95	10.8	130	100	2.0	3-WAY

NOTE: THIS SCHEDULE IS PROVIDED AS INFORMATION FOR TAB PURPOSES ONLY

AIR SEPARATOR SCHEDULE

MARK	SERVES	FLOW		MAX. WORKING PRESS. PSIG	MIN. INLET SIZE	MIN. OUTLET SIZE
		MAX. RATE GPM	MAX WPD			
AS-1	HOT WATER SYSTEM	25	2'	150	2"	2"
AS-2	CHILLED WATER SYSTEM	125	3'	150	3"	3"

NOTES: 1. MOUNTED IN PIPING & SUPPORTED FROM STRUCTURE.
2. CENTRIFUGAL TYPE, ASME WELDED STEEL WITH INTERNAL BAFFLES.
3. PROVIDE WITH AAV WITHOUT STRAINER

EXPANSION TANK SCHEDULE

MARK	SERVES	VOLUME (GAL.)		INITIAL CHARGE PRESSURE PSI.
		TANK MIN.	ACCEPTANCE MIN.(GAL.)	
ET-1	HOT WATER SYSTEM	15	5	30
ET-2	CHILLED WATER SYSTEM	23	10	30

PUMP SCHEDULE

MARK	LOCATION	SERVICE	TYPE	PERFORMANCE DATA			ELECTRICAL DATA				SPECIAL REMARKS
				CAPACITY GPM	HEAD FT. (H20)	MAXIMUM SPEED/RPM	MAXIMUM MOTOR – H.P.	VOLTS	PHASE	HERTZ	
CHWP-1	MECH RM	CHILLED WATER	ES	118	70	1760	5	208	3	60	1,2,3,4,5
CHWP-2	OUTSIDE	ACC-1	IL	59	30	1760	1	208	3	60	1,2,3,4
CHWP-3	OUTSIDE	ACC-2	IL	59	30	1760	1	208	3	60	1,2,3,4
HWP-1	MECH RM	HEATING HOT WATER	IL	21	60	1760	2	208	3	60	1,2,3,4

NOTES:
1. ALL PUMPS SHALL BE NON-OVER LOADING THROUGHOUT THE ENTIRE PUMP CURVE.
2. ALL PUMPS SHALL HAVE HIGH EFFICIENT MOTORS.
3. ALL BASE MOUNTED PUMPS PROVIDED WITH INTEGRAL DRAIN PANS
4. PUMPS TO BE PROVIDED WITH MECHANICAL SEALS UNLESS NOTED.
5. CHWP-2&3 SHALL BE EXTERIOR GRADE

ES END SUCTION, BASE MOUNTED
CHWP CHILLED WATER PUMP
HWP HOT WATER PUMP
IL IN-LINE PUMP

AIR DISTRIBUTION SCHEDULE

MARK	CFM	NECK SIZE	FACE SIZE LENGTH	DESCRIPTION
A	000-100 101-225 226-300 301-400 401-500	6ø 8ø 10ø 12ø 14ø	24x24 (TYP)	SUPPLY DIFFUSER BASIS OF DESIGN: PRICE SPD COLOR: WHITE MATERIAL: ALUMINUM OPPOSED BLADE DAMPERS: NO
B	000-110 111-220 221-350 351-530 531-730 731-970 971-1240 1241-1540 1541-1880	6x6 8x8 10x10 12x12 14x14 16x16 18x18 20x20 22x22	24x24 (TYP)	RETURN / EXHAUST GRILLE BASIS OF DESIGN: PRICE 80 COLOR: WHITE MATERIAL: ALUMINUM OPPOSED BLADE DAMPERS: NO 1/2"x1/2"x1/2" GRID
C	000-160 161-250 251-330 331-500 501-890	6x6 8x6 12x6 18x6 18x10		SUPPLY SIDEWALL DIFFUSER BASIS OF DESIGN: PRICE 610L COLOR: WHITE MATERIAL: EXTRUDED ALUMINUM OPPOSED BLADE DAMPERS: NO

FAN SCHEDULE

MARK	LOCATION	TYPE	DRIVE	PERFORMANCE DATA				ELECTRICAL				CONTROL	NOTES
				AIR FLOW CFM	E.S.P. IN. H_2O	MAX. RPM	MAX. SONES	MAX. WATTS/HP	VOLTS	PHASE	Hz		
EF-1	JANITOR	IL	DD	550	0.75	1725	8.2	1/2 HP	120	1	60	ON/OFF	1,2,3,4,5

FAN SCHEDULE LEGEND
DD – DIRECT DRIVE
EF – EXHAUST FAN
CF – CABINET FAN
IL – INLINE
OASF – OUTSIDE AIR SUPPLY FAN

FAN NOTES
1. ALL FANS SHALL BE INSTALLED WITH FLEXIBLE DUCT CONNECTION, VIBRATION ISOLATORS, AND FLEXIBLE CONDUIT.
2. FAN SHALL NOT BE IN CONTACT WITH ANY OTHER DUCT, PIPING, CONDUIT, OR STRUCTURAL MEMBERS.
3. ALL FANS SHALL BE PROVIDED WITH BACKDRAFT DAMPERS.
4. ALL FANS SHALL BE PROVIDED WITH SOLID STATE SPEED CONTROLS ON FANS 1/2 HP AND UNDER.
5. FAN SHALL RUN 24/7.

BOILER SCHEDULE

MARK	TYPE UNIT	BOILER RATINGS			BURNER DATA						WATER DATA			ELEC DATA
		NET INPUT MBH	NET OUTPUT MBH	OPERATING PRESSURE PSIG	GAS FIRING RATE CFH	EFFICIENCY PERCENT (MINIMUM)	GAS PRESSURE AVAILABLE	TYPE	(MIN) FLUE SIZE	COMBUSTION CONTROL	GPM	°F ENT/LVG	MAX WPD (FT)	V/P/H
B-1	HYDRONIC HEATING BOILER	399	375	15	100%	94%	14"	FORCED DRAFT	4"	STAGED	21	130/100	18	120/1/60

GENERAL NOTES
BOILERS AND BURNERS SHALL BE UL LISTED, AND FACTORY TESTED. BOILERS SHALL BE APPROVED BY AGA, ASME INSPECTED AND STAMPED FOR WORKING PRESSURE, COMPLETE WITH MANUFACTURERS DATA REPORT. BOILERS SHALL BE PROVIDED WITH RELIEF VALVES AS REQUIRED BY ASME CODE. THE EFFICIENCY IS STEADY STATE AT HIGH FIRE.

1. GAS TRAIN BY BOILER MANUFACTURER; CONTRACTOR TO VENT GAS VALVE OUTDOORS
2. UNIT WITH RELIEF & BLOWDOWN VALVES.
3. DOUBLE WALL POSITIVE PRESSURE FLUE STACK; COMBUSTION AIR SHALL BE VIA DIRECT VENT FROM OUTDOORS.
4. UNIT PROVIDED WITH 3 WAY VALVE, PURGING & FLOW SWITCHES, CIRCULATOR PUMP, RELIEF, GAUGES, DRAINS, CONDENSATE TRAP, AND CONDENSATE NEUTRALIZATION KIT.
5. STAINLESS STEEL HEAT EXCHANGER

EXISTING CHILLED WATER VARIABLE AIR VOLUME AIR HANDLING UNIT SCHEDULE

MARK	FAN DATA									CHILLED WATER COOLING COIL DATA											FILTER DATA			
	TYPE	SUPPLY AIR CFM MIN/MAX	HEATING AIR CFM	OUTSIDE AIR CFM MIN/MAX	E.S.P. IN. H_2O	FAN HP	ELECTRICAL DATA			MAX. FACE VEL FPM	TOT. COOLING CAP. MBTU/HR	SENSIBLE COOLING CAP. MBTU/HR	ENTERING AIR TEMP.		LEAVING AIR TEMP.		CHILLED WATER DATA		MAX WPD FT	CONTROL VALVE		MAX. FACE VEL. FPM	TYPE	THICK	REMARKS
							VOLTS	PHASE	HERTZ				°Fdb	°Fwb	°Fdb	°Fwb	GPM	°F ENT.		TYPE	Cv				
AHU-1	VDT	1360/6675	NA	250/650	3.0	10	208	3	60	550	220.8	171.6	77.1	63.4	53	52	44	44	13	3-WAY	22	500	T-AWAY	2"	BELOW

EXISTING CHILLED WATER COMPUTER ROOM AIR HANDLING UNIT SCHEDULE

MARK	FAN DATA					ELECTRICAL DATA			CHILLED WATER COOLING COIL DATA										HOT WATER REHEAT COIL DATA						HUMIDIFER DATA		FILTER DATA				
	TYPE	SUPPLY AIR CFM	OUTSIDE AIR CFM	E.S.P. IN. H_2O	FAN HP	VOLTS	PHASE	HERTZ	MAX. FACE VEL FPM	TOT. COOLING CAP. MBTU/HR	SENSIBLE COOLING CAP. MBTU/HR	ENTERING AIR TEMP.		LEAVING AIR TEMP.		CHILLED WATER DATA		MAX WPD FT	CONTROL VALVE		TOT. CAP. MBTU/HR	HOT WATER DATA		MAX WPD FT	CONTROL VALVE		TYPE	CAPACITY LB/HR	MAX. FACE VEL. FPM	TYPE	THICK	REMARKS
												°Fdb	°Fwb	°Fdb	°Fwb	GPM	°F ENT.		TYPE	Cv		GPM	°F ENT.		TYPE	Cv						
CRU-3	VDT	4465	50	0.5	5.0	208	3	60	500	91.9	89.5	73.0	60.6	54	53	19	44	15	3-WAY	10	45	5	130	15	3-WAY	3	INF	0.36	500	T-AWAY	2"	BELOW

LEGEND:
VDT – VERTICAL DRAW THRU
INF – INFRARED

NOTE: THESE SCHEDULES PROVIDED AS INFORMATION FOR TAB PURPOSES ONLY

PETERSON ENGINEERING INC.
(PROF. ENG. #: 3600)
75 SOUTH "F" STREET
PENSACOLA, FLORIDA 32502
(850) 434-0513
PEI JOB #17074

100% SUBMITTAL

REV # | DATE | DESCRIPTION

REPAIR BUILDING 90748
23 SOWS
MECHANICAL SCHEDULES

AIR FORCE SPECIAL OPERATIONS COMMAND
1 SPECIAL OPERATIONS CIVIL ENGINEER SQUADRON
HURLBURT FIELD, FLORIDA

DATE: 16 JAN 2018
DESIGNED BY: GDP
DRAWN BY: DJM
BUILDING NUMBER: 90748
PROJECT NUMBER: FTEV16-3001
SHEET REFERENCE: M-601
SHEET NUMBER: 29 OF 48

GREGORY DAMIAN PETERSON LICENSED PE 34088 STATE OF FLORIDA PROFESSIONAL ENGINEER

D:\PROJECT\2017\17074 Repair Bldg. 90748 SOS\DWG\Mech\M-601.dwg, 1/24/2018 1:23:32 PM, joiner

MINIMUM POINTS TO BE MONITORED BY FACTORY INSTALLED CONTROLS					
EQUIPMENT	POINT NAME	POINT	UNITS	TREND	ALARM
ACC-2	CHW FLOW	AI	GPM	X	
ACC-2	CHW LEAVING T	AI	°F	X	
ACC-2	STATUS ON/OFF	BI	ON/OFF	X	
ACC-2	CHWP PROOF OF FLOW	BI	OK/FAIL		X
ACC-2	CHWP VFD ALARM	BI	OK/ALARM		X
ACC-2	CH ALARM	BI	OK/ALARM		X
ACC-2	CH ENABLE	BO	ON/OFF	X	
ACC-2	CHWP START/STOP	BO	ON/OFF	X	
ACC-2	CH LOAD	AI	%	X	
AHU-2	SA TEMP	AI	°F	X	
AHU-2	SA FLOW	AI	CFM	X	
AHU-2	SA STATIC PRESS	AI	IN H20	X	
AHU-2	TEMP SETPOINT	AI	°F	X	
AHU-2	RH SETPOINT	AI	%	X	
AHU-2	RA TEMP	AI	°F	X	
AHU-2	RA RH	AI	%	X	
AHU-2	CHW COIL EWT	AI	°F	X	
AHU-2	CHW COIL LWT	AI	°F	X	
AHU-2	CHW VALVE COMMAND	AI	%	X	X
AHU-2	FILTER STATUS	AI	OK/REPLACE		X
AHU-2	SF COMMAND	AO	%	X	
AHU-2	SF STATUS	BI	OK/FAIL	X	
AHU-2	SA SMOKE DETECTOR	BI	OK/ALARM		X
AHU-2	EMERG SHUTDOWN	BI	ON/OFF		X
AHU-2	VFD ALARM	BI	OK/ALARM		X
AHU-2	AHU SF START/STOP	BO	ON/OFF	X	
AHU-2	FILTER STATUS	AI	OK/REPLACE		X

LEGEND

F/A	FIRE ALARM SHUTDOWN RELAY OUTPUT
S	DUCT SMOKE DETECTOR
E	END SWITCH
EVSD	EMERGENCY VENTILATION SHUTDOWN
FMS	FLOW MONITORING STATION
DPS	DIFFERENTIAL PRESSURE SENSOR
SF	SUPPLY FAN
EF	EXHAUST FAN
DM	DAMPER MOTOR (AUTOMATIC)
OA	OUTSIDE AIR
FM	FLOW METER
CV	CONTROL VALVE

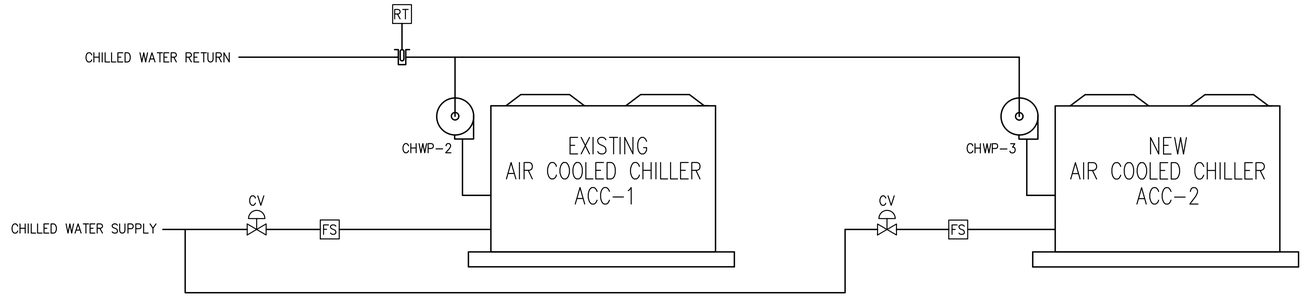

CHILLED WATER CONTROL DIAGRAM

GENERAL NOTE:

NEW AIR COOLED CHILLER (ACC-2) SHALL BE PROVIDED WITH FACTORY MOUNTED CONTROLS AND BACNET INTERFACE TO THE HURLBURT DDC SYSTEM. POINTS SHOWN ON THE SCHEDULE REPRESENT THE MINIMUM REQUIRED (SEE ABOVE).

FACILITY WILL BE 24/7 OPERATION.

AHU-2 SEQUENCE OF OPERATION

ALL SETPOINTS SHALL BE ADJUSTABLE.

SETPOINTS OF 75°F COOLING AND 69°F HEATING SHALL BE MAINTAINED.
THE AHU SUPPLY FAN SHALL BE ENABLED AND COMMANDED TO RUN. THE SUPPLY STATIC PRESSURE CONTROL LOOP, COOLING COIL CONTROL LOOP, AND OUTSIDE AIR CONTROL LOOP SHALL BE ENABLED. VAV TERMINAL UNITS SHALL ALSO BE ENABLED WITH TEMPERATURE SETPOINTS FROM EACH LOCAL SPACE THERMOSTAT.

WHEN THE SUPPLY STATIC PRESSURE CONTROL LOOP IS ENABLED, THE SYSTEM SHALL MAINTAIN STATIC PRESSURE SETPOINT.

WHEN THE COOLING COIL CONTROL LOOP IS ENABLED, THE DDC HARDWARE SHALL MODULATE THE COOLING COIL CHILLED WATER VALVE TO MAINTAIN SUPPLY AIR TEMPERATURE AT 55°F SETPOINT. WHEN THIS LOOP IS DISABLED, THE COOLING COIL CHILLED WATER VALVE SHALL BE CLOSED.

WHEN THE OUTSIDE AIR CONTROL LOOP IS ENABLED, THE DDC SHALL MODULATE THE OUTSIDE AIR DAMPER OPEN TO ATTAIN THE SCHEDULED OUTSIDE AIR CFM SETPOINT. IF THE OUTSIDE AIR DAMPER IS 100% OPEN AND THE MAXIMUM SCHEDULED OA CFM SETPOINT CANNOT BE ATTAINED, THEN THE DDC SHALL MODULATE THE RETURN AIR DAMPER TOWARD THE CLOSED POSITION UNTIL THE MAXIMUM SCHEDULED OUTSIDE AIR CFM IS ATTAINED. AT NO TIME SHALL THE RA DAMPER BE LESS THAN 50% (ADJ) OPEN.

VAV TERMINAL UNIT SEQUENCE OF OPERATION

ALL SETPOINTS SHALL BE ADJUSTABLE.

THE TERMINAL CONTROL UNIT (TCU) SHALL MODULATE THE VAV DAMPER AND THE HOT WATER CONTROL VALVE AS NEEDED TO MAINTAIN SPACE TEMPERATURE AT SETPOINT AS FOLLOWS. ON A RISE IN SPACE TEMPERATURE ABOVE SETPOINT THE CONTROLLER SHALL MODULATE THE VAV DAMPER OPEN TO THE MAXIMUM SCHEDULED CFM SETTING. AS SPACE TEMPERATURE DROPS TO SETPOINT, TCU SHALL MODULATE THE VAV DAMPER CLOSED TO MINIMUM CFM SETTING. IF SPACE TEMPERATURE CONTINUES TO DROP BELOW SETPOINT THROUGH ITS HEATING DEADBAND, TCU SHALL MODULATE THE HOT WATER CONTROL VALVE OPEN AND THE VAV DAMPER SHALL MODULATE TO ITS HEATING CFM SETPOINT AS INDICATED ON THE VAV SCHEDULE.

EMERGENCY SHUT-DOWN SWITCH (qty=2)

INSTALL A RED LIGHTED PUSH-BUTTON, PULL-TO-RESET BUTTON THAT WILL SHUT DOWN ALL BUILDING AIR MOVEMENT DEVICES AND COMMAND ALL DAMPERS (SUPPLY AND EXHAUST) TO THE OUTSIDE CLOSED. THE BUTTON SHALL BE LOCATED UNDER AN INDIVIDUAL CLEAR ACRYLIC COVER AND LABELED, "HVAC EMERGENCY SHUTDOWN". LOCATE THE BUTTON AS SHOWN ON THE PLANS. EMERGENCY SHUTDOWN WILL BE EQUAL PRIORITY TO FIRE ALARM SHUTDOWN INTERLOCKS.

EXHAUST FAN SEQUENCE OF OPERATION

EXHAUST FAN SHALL BE RAN 24/7.

CHILLED WATER SEQUENCE OF OPERATIONS

CHILLERS: ACC-1 AND ACC-2 SHALL BE UNDER THE CONTROL OF A MASTER / SLAVE SEQUENCE. THIS SEQUENCE SHALL ALTERNATE MONTHLY. WHEN DDC SYSTEM COMMANDS MASTER CHILLER ON, CHILLER SHALL COME ON AND MAINTAIN CHILLED WATER SETPOINT (44°F ADJ.) UNDER CONTROL OF BUILT IN CONTROLS. DDC SHALL MONITOR CHILLER DEMAND. WHEN CHILLER HAS BEEN OPERATING AT 90% OF FULL LOAD FOR 10 MINUTES, DDC SHALL OPEN CONTROL VALVE OF SLAVE CHILLER AND CORRESPONDING CHILLER PUMP SHALL START (CHWP-2 OR CHWP-3). AT THIS TIME, THE SLAVE CHILLER SHALL BE COMMANDED ON. DDC SHALL MONITOR CHILLER DEMAND OF BOTH CHILLERS OPERATING. WHEN THE DEMAND OF BOTH CHILLERS HAS BEEN BELOW 25% OF FULL LOAD FOR 10 MINUTES, THE SLAVE CHILLER SHALL BE COMMANDED OFF AND IT'S CONTROL VALVE SHALL CLOSE.

CHILLED WATER PUMPS: CHWP-1 SHALL RUN AT FULL FLOW CONTINUOUSLY. CHWP-2 AND CHWP-3 SHALL CYCLE ON/OFF WITH CHILLERS AS NEEDED. IF ONE CHILLER IS ONLINE, THE CORRESPONDING CHWP, (CHWP-2 OR CHWP-3) SHALL DELIVER FULL FLOW RATE. IF BOTH CHILLERS ARE ONLINE, BOTH CHWP-2 AND CHWP-3 SHALL DELIVER FULL FLOW RATE.

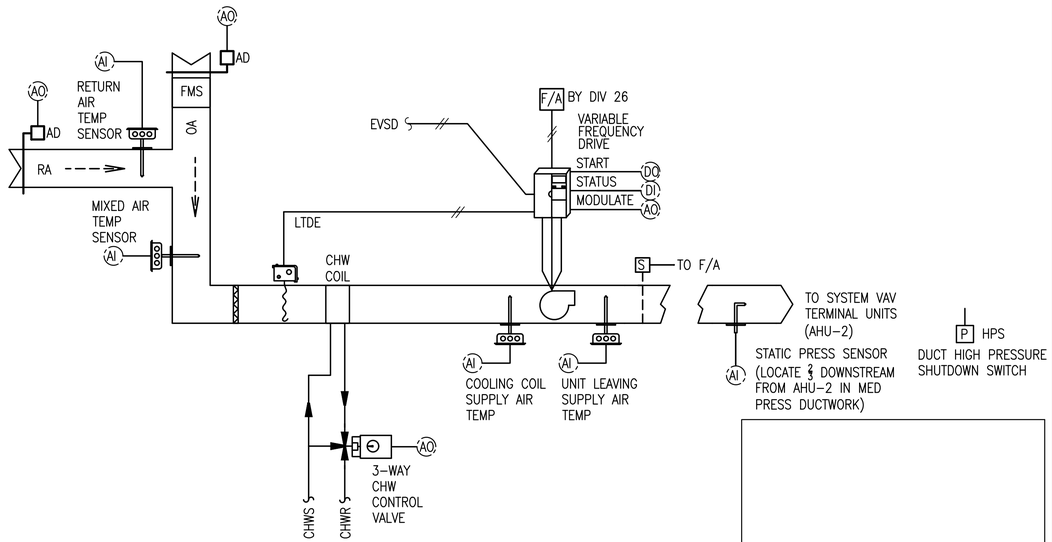

EXISTING AHU-1 AND NEW AHU-2 CONTROL DIAGRAM

NO SCALE

CONTRACTOR SHALL PROVIDE ALL NEW CONTROLS FOR AHU-2.
AHU-1 IS AN EXISTING TO REMAIN AHU WITH ALL EXISTING TO REMAIN CONTROLS. AHU-1 CONTROLS SCHEMATIC IS SHOWN FOR REFERENCE ONLY.

PETERSON ENGINEERING INC.
(PROF. ENG. #: 3600)
75 SOUTH "F" STREET
PENSACOLA, FLORIDA 32502
(850) 434-0513
PEI JOB #17074

GREGORY DAMIAN PETERSON LICENSE 73088 STATE OF FLORIDA PROFESSIONAL ENGINEER

100% SUBMITTAL

REV #	DATE	DESCRIPTION

REPAIR BUILDING 90748
23 SOWS

MECHANICAL CONTROLS

AIR FORCE SPECIAL OPERATIONS COMMAND
1 SPECIAL OPERATIONS CIVIL ENGINEER SQUADRON
HURLBURT FIELD, FLORIDA

DATE: 16 JAN 2018
DESIGNED BY: GDP
DRAWN BY: DJM
BUILDING NUMBER: 90748
PROJECT NUMBER: FTEV16-3001
SHEET REFERENCE: M-602
SHEET NUMBER: 30 OF 48

D:\PROJECT\2017\17074 Repair Bldg. 90748 SOS\DWG\Mech\M-602.dwg, 1/24/2018 1:23:37 PM, joiner

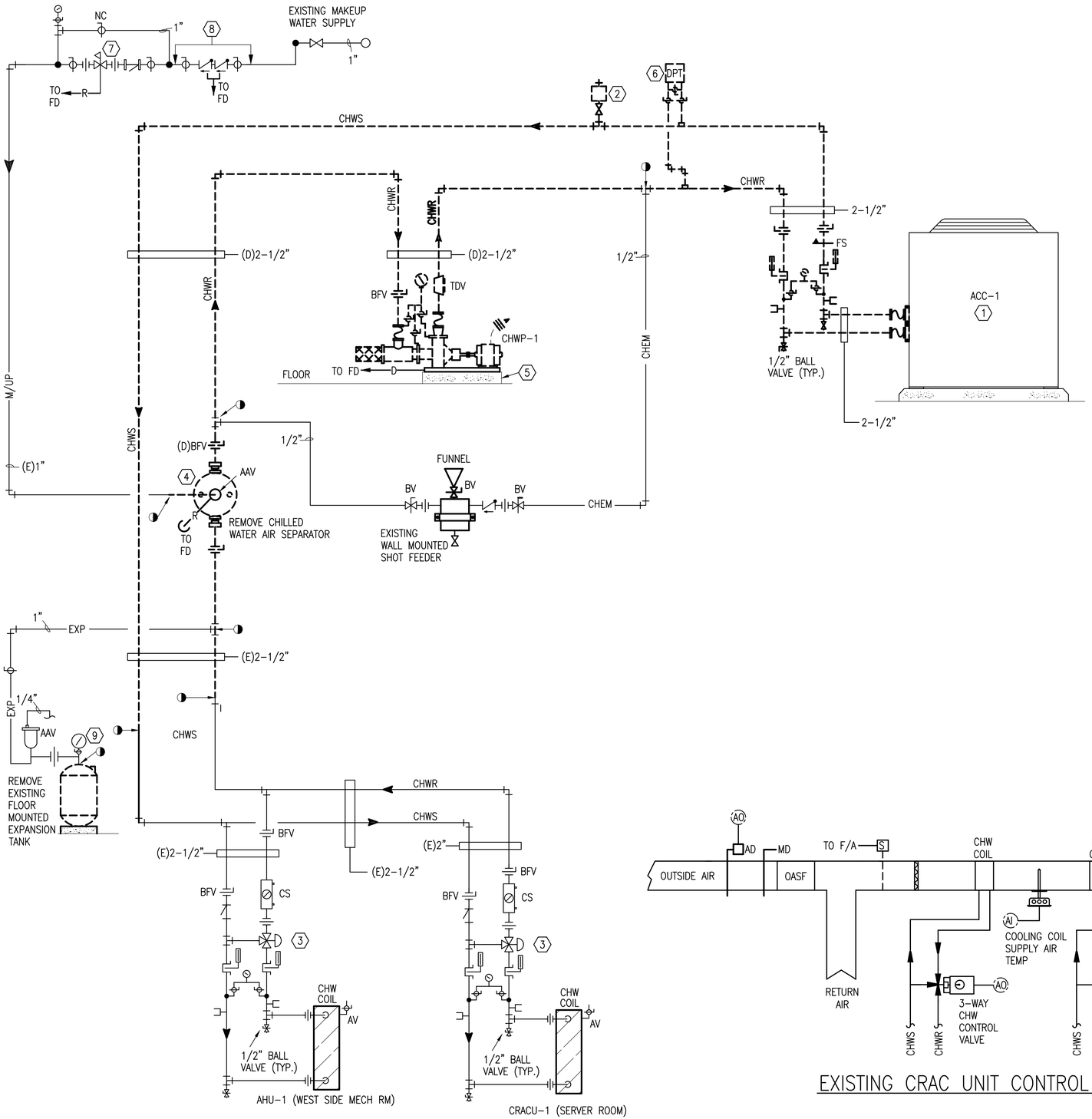

CHILLED WATER PIPING DIAGRAM – DEMOLITION

PIPING NOTES

1. EXISTING AIR COOLED CHILLER AND CONCRETE PAD TO REMAIN.
2. REMOVE FLOW METER.
3. EXISTING MODULATING 3-WAY CONTROL VALVE.
4. REMOVE IN-LINE CHILLED WATER AIR SEPARATOR.
5. REMOVE CHILLED WATER PUMP MOUNTED ON 4" CONCRETE PAD.
6. REMOVE DIFFERENTIAL PRESSURE TRANSMITTER FOR DDC CONTROLS
7. EXISTING COMBINATION PRESSURE REDUCING/RELIEF VALVE SET 20#, RELIEF 30#.
8. EXISTING REDUCED PRESSURE BACKFLOW PREVENTER.
9. REMOVE EXPANSION TANK (SEE SHEET M-604)

CHILLED WATER PIPING LEGEND AND ABBREVIATIONS

PRESSURE GAGE (LIQUID FILLED, NON-SHOCK, COMPOUND FOR PUMPS)	
THERMOMETER W/WELL	
BALL VALVE	
CIRCUIT SETTER	
BUTTERFLY VALVE	
UNION	
STRAINER	
FLEX UNION	
PETE'S PLUG (PRESSURE/TEMP.)	

BFV	BUTTERFLY VALVE
BV	BALL VALVE
CHWS	CHILLED WATER SUPPLY
CHWR	CHILLED WATER RETURN
FS	FLOW SWITCH
ACC	AIR COOLED CHILLER
DPT	DIFFERENTIAL PRESSURE TRANSMITTER
R	RELIEF PIPING
FD	FLOOR DRAIN
AAV	AUTOMATIC AIR VALVE
STR	STRAINER
TDV	TRIPLE DUTY VALVE
----	DEMOLITION
(N)	NEW
(E)	EXISTING
(D)	DEMOLITION

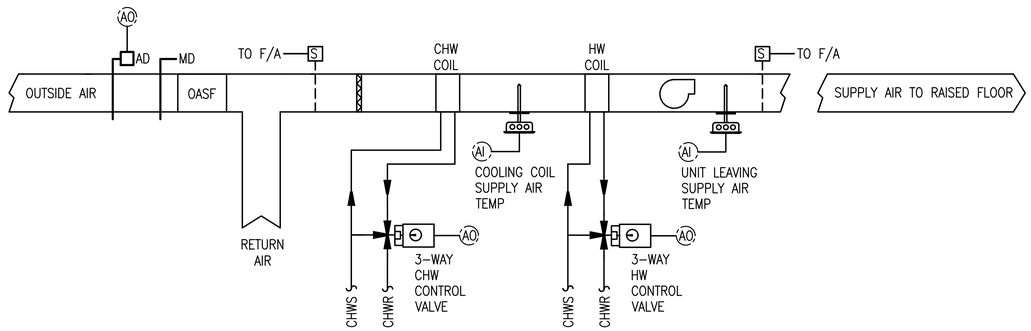

EXISTING CRAC UNIT CONTROL DIAGRAM

PETERSON ENGINEERING INC.
(PROF. ENG. #: 3600)
75 SOUTH "F" STREET
PENSACOLA, FLORIDA 32502
(850) 434-0513
PEI JOB #17074

100% SUBMITTAL

REV #	DATE	DESCRIPTION

REPAIR BUILDING 90748
23 SOWS

CHILLED WATER PIPING DIAGRAM

AIR FORCE SPECIAL OPERATIONS COMMAND
1 SPECIAL OPERATIONS CIVIL ENGINEER SQUADRON
HURLBURT FIELD, FLORIDA

GREGORY DAMIAN PETERSON — LICENSE NO. 74088 — STATE OF FLORIDA — PROFESSIONAL ENGINEER

DATE:	16 JAN 2018
DESIGNED BY:	GDP
DRAWN BY:	DJM
BUILDING NUMBER:	90748
PROJECT NUMBER:	FTEV16-3001
SHEET REFERENCE:	M-603
SHEET NUMBER:	31 OF 48

D:\PROJECT\2017\17074 Repair Bldg. 90748 SOS\DWG\Mech\M-603.dwg, 1/24/2018 1:23:42 PM, joiner

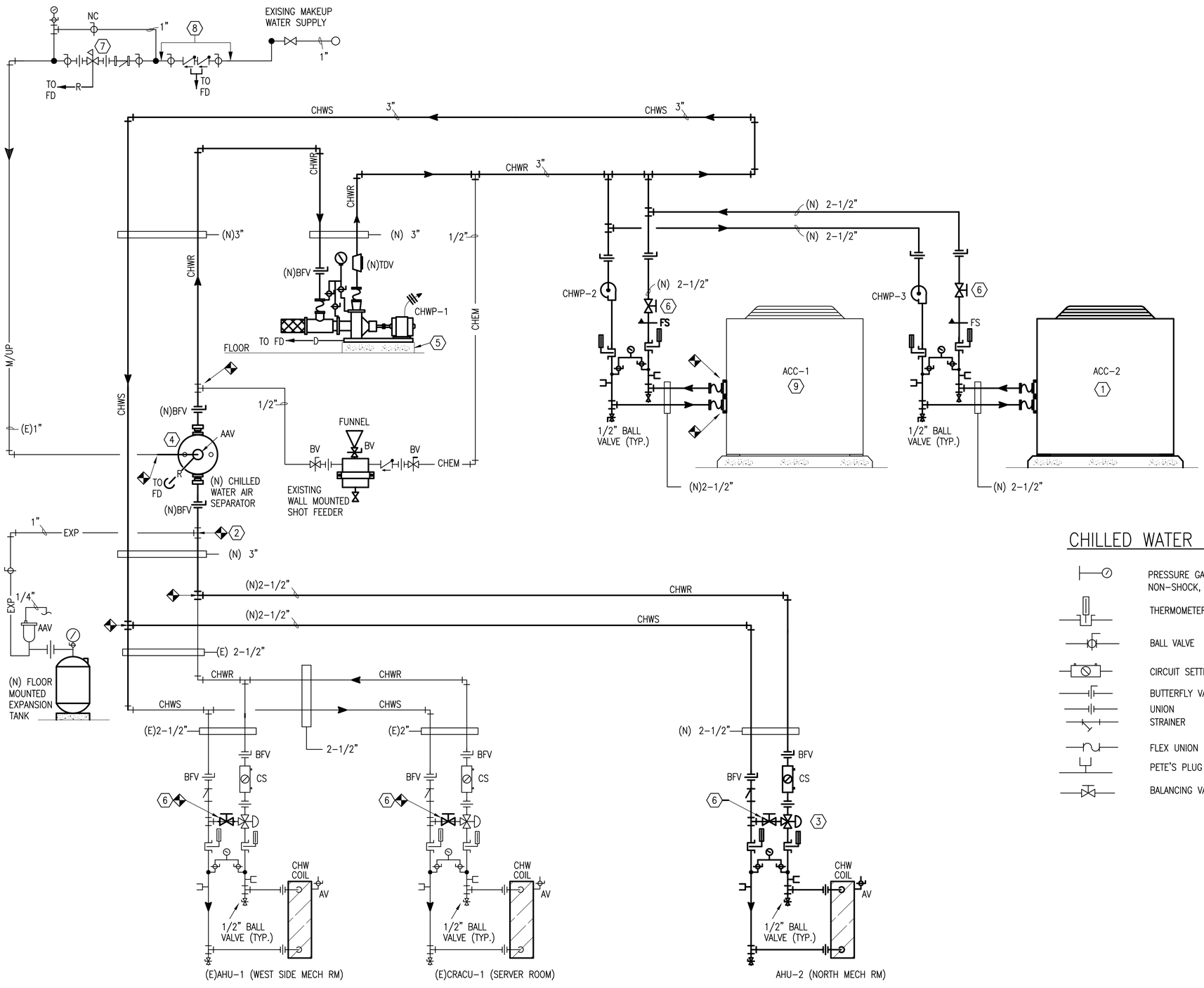

CHILLED WATER PIPING DIAGRAM – NEW WORK

PIPING NOTES

1. NEW AIR COOLED CHILLER (ACC-2) ON NEW 6" CONCRETE PAD.
2. CONNECT NEW EXPANSION TANK TO NEW CHILLED WATER PIPING.
3. NEW MODULATING 3-WAY CONTROL VALVE.
4. NEW IN-LINE CHILLED WATER AIR SEPARATOR W/OUT STRAINER.
5. NEW CHILLED WATER PUMP MOUNTED ON 4" CONCRETE PAD.
6. NEW BALANCING VALVE
7. COMBINATION PRESSURE REDUCING/RELIEF VALVE SET 20#, RELIEF 30#.
8. EXISTING REDUCED PRESSURE BACKFLOW PREVENTER.
9. EXISTING AIR COOLED CHILLER ACC-1. REPIPE AS REQUIRED.

CHILLED WATER PIPING LEGEND AND ABBREVIATIONS

	PRESSURE GAGE (LIQUID FILLED, NON-SHOCK, COMPOUND)	BFV	BUTTERFLY VALVE
	THERMOMETER W/WELL	BV	BALL VALVE
	BALL VALVE	CHWS	CHILLED WATER SUPPLY
	CIRCUIT SETTER	CHWR	CHILLED WATER RETURN
	BUTTERFLY VALVE	FS	FLOW SWITCH
	UNION	ACC	AIR COOLED CHILLER
	STRAINER	DPT	DIFFERENTIAL PRESSURE TRANSMITTER
	FLEX UNION	R	RELIEF PIPING
	PETE'S PLUG (PRESSURE/TEMP.)	FD	FLOOR DRAIN
	BALANCING VALVE	AAV	AUTOMATIC AIR VALVE
		STR	STRAINER
		TDV	TRIPLE DUTY VALVE
		(N)	NEW
		(E)	EXISTING
		(D)	DEMOLITION
		CS	CIRCUIT SETTER

PETERSON ENGINEERING INC.
(PROF. ENG. #: 3600)
75 SOUTH "F" STREET
PENSACLE, FLORIDA 32502
(850) 434-0513
PEI JOB #17074

100% SUBMITTAL

GREGORY DAMIAN PETERSON LICENSE 44088 STATE OF FLORIDA PROFESSIONAL ENGINEER

REV #	DATE	DESCRIPTION

REPAIR BUILDING 90748
23 SOWS

CHILLED WATER PIPING DIAGRAM

AIR FORCE SPECIAL OPERATIONS COMMAND
1 SPECIAL OPERATIONS CIVIL ENGINEER SQUADRON
HURLBURT FIELD, FLORIDA

DATE: 16 JAN 2018
DESIGNED BY: GDP
DRAWN BY: DJM
BUILDING NUMBER: 90748
PROJECT NUMBER: FTEV16-3001
SHEET REFERENCE: M-604
SHEET NUMBER: 32 OF 48

D:\PROJECT\2017\17074 Repair Bldg. 90748 SOS\DWG\Mech\M-604.dwg, 1/24/2018 1:23:47 PM, joiner

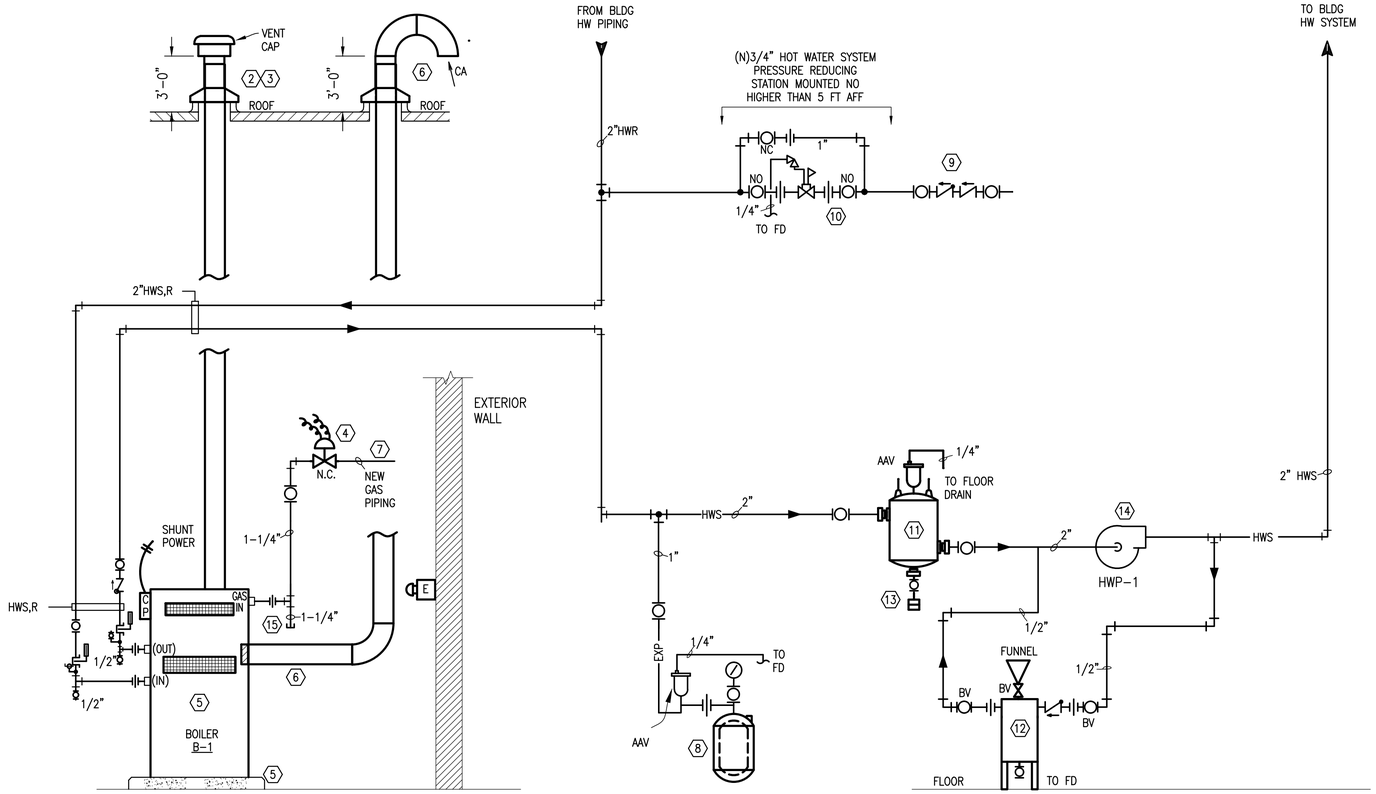

HOT WATER PIPING DIAGRAM

NO SCALE

HOT WATER DIAGRAM NOTES

1. NEW BOILER EMERGENCY SHUTDOWN SWITCH.
2. NEW ROOF PENETRATION FOR NEW BOILER FLUE. PROVIDE NEW FLASHING.
3. NEW FLUE PIPE AND MATERIAL TO COMPLY WITH MANUFACTURER'S RECOMMENDATION.
4. NEW BOILER EMERGENCY SHUTDOWN WHICH SHUNTS POWER FOR BOILER CIRCUITS.
5. NEW BOILER MOUNTED ON 4" HIGH CONCRETE PAD.
6. NEW COMBUSTION AIR DUCT SHALL DIRECT VENT FROM OUTSIDE MECH ROOM IN COMPLIANCE WITH THE BOILER MANUFACTURERS RECOMMENDATIONS – INLET TO HAVE INTEGRAL AIR FILTER.
7. SEE PLUMBING FOR NEW GAS PIPING.
8. NEW BLADDER EXPANSION TANK SUPPORTED FROM STUCTURE.
9. SEE PLUMBING DRAWING FOR COLD WATER MAKE-UP; WATER SUPPLY TO HOT WATER SYSTEM MUST BE THROUGH A REDUCED PRESSURE BACKFLOW PREVENTER.
10. NEW COMBINATION PRESSURE REDUCING/RELIEF VALVE SET 20#, RELIEF 30#.
11. NEW IN-LINE PIPING MOUNTED AIR SEPARATOR WITHOUT STRAINER.
12. NEW 2 GALLON FLOOR MOUNTED SHOT FEEDER.
13. NEW PIPE BLOWDOWN TO FLOOR DRAIN; SAME ROUTE AS CONDENSATE FROM AHU-2.
14. NEW INLINE HOT WATER PUMP PIPE MOUNTED.
15. INSTALL NEW 1-1/4" DIRT LEG 6" IN LENGTH.

HOT WATER-SEQUENCE OF OPERATION

BUILDING WILL BE OCCUPIED 24/7. HOT WATER SYSTEM SHALL BE CONTROLLED BY DDC.

WHEN THERE IS A CALL FOR HEATING THE HOT WATER PUMP SHALL BE ENABLED. AFTER A SHORT TIME, THE BOILER SHALL BE ENABLED. THE DDC SYSTEM SHALL MONITOR HOT WATER SUPPLY AND RETURN TEMPERATURES.

HOT WATER SUPPLY TEMPERATURE SHALL BE 130 DEG F (ADJ). HOT WATER RETURN TEMPERATURE SHALL BE 100 DEG F (ADJ).

HOT WATER PIPING LEGEND AND ABBREVIATIONS

PRESSURE GAGE (LIQUID FILLED, NON-SHOCK, COMPOUND FOR PUMPS)	
THERMOMETER W/WELL	
BALL VALVE	
CIRCUIT SETTER	
BUTTERFLY VALVE	
UNION	
STRAINER	
FLEX UNION	
PETE'S PLUG (PRESSURE/TEMP.)	

BFV	BUTTERFLY VALVE
BV	BALL VALVE
HWS	HOT WATER SUPPLY
HWR	HOT WATER RETURN
FS	FLOW SWITCH
B	BOILER
DPT	DIFFERENTIAL PRESSURE TRANSMITTER
R	RELIEF PIPING
FD	FLOOR DRAIN
AAV	AUTOMATIC AIR VALVE
STR	STRAINER
TDV	TRIPLE DUTY VALVE

PETERSON ENGINEERING INC.
(PROF. ENG. #: 3600)
75 SOUTH "F" STREET
PENSACOLA, FLORIDA 32502
(850) 434-0513
PEI JOB #17074

GREGORY DAMIAN PETERSON LICENSE 44088 STATE OF FLORIDA PROFESSIONAL ENGINEER

100% SUBMITTAL

REV #	DATE	DESCRIPTION

REPAIR BUILDING 90748
23 SOWS

HOT WATER PIPING DIAGRAM

AIR FORCE SPECIAL OPERATIONS COMMAND
1 SPECIAL OPERATIONS CIVIL ENGINEER SQUADRON
HURLBURT FIELD, FLORIDA

DATE: 16 JAN 2018
DESIGNED BY: GDP
DRAWN BY: DJM
BUILDING NUMBER: 90748
PROJECT NUMBER: FTEV16-3001
SHEET REFERENCE: M-605
SHEET NUMBER: 33 OF 48

D:\PROJECT\2017\17074 Repair Bldg. 90748 SOS\DWG\Mech\M-605.dwg, 1/24/2018 1:23:52 PM, joiner

FIRE ALARM GENERAL NOTES

1. THESE DRAWINGS DEPICT GENERAL LOCATIONS OF LIFE SAFETY EQUIPMENT & FIELD DEVICES. EXACT ROUTING OF CONDUITS TO BE DETERMINED IN THE FIELD BY THE INSTALLING CONTRACTOR TO SUIT CONDITIONS. ALL CHANGES SHALL BE CLEARLY INDICATED ON THE RECORD DRAWINGS.
2. CONTRACTOR IS RESPONSIBLE FOR MAKING AND OBTAINING APPROVAL FOR ALL NECESSARY ADJUSTMENT IN CIRCUITING AS REQUIRED TO ACCOMMODATE THE RELOCATION OF EQUIPMENT AND/OR DEVICES WHICH ARE AFFECTED BY ANY AUTHORIZED CHANGE. ALL CHANGES SHALL BE CLEARLY INDICATED ON THE RECORD DRAWINGS.
3. A SET OF APPROVED FIRE ALARM SHOP DRAWINGS SHALL BE AT THE JOB SITE AND SHALL BE USED FOR INSTALLATION.
4. THE POWER CIRCUIT TO THE FACP AND TO THE FIRE ALARM POWER SUPPLIES SHALL BE ON A DEDICATED 120V, 20A BRANCH CIRCUIT BREAKER, AND SHALL HAVE A RED MARKING, LOCK-ON PROVISION AND SHALL BE IDENTIFIED AS "FIRE ALARM CIRCUIT CONTROL." THE LOCATION OF THE CIRCUIT DISCONNECT MEANS (CIRCUIT BREAKER) SHALL BE PERMANENTLY IDENTIFIED AT THE FIRE ALARM CONTROL UNIT.
5. THE CONTRACTOR WILL MAINTAIN ALL AREAS OF THE BUILDING IN A NEAT AND WORKMAN LIKE MANNER.
6. ANY SMOKE DETECTOR HEAD INSTALLED BEFORE THE BUILDING IS CLEANED AND ACCEPTED SHALL BE COVERED TO PROTECT FROM DUST.
7. THE FIRE ALARM INSTALLER WILL MAINTAIN THE FIRE RESISTANCE INTEGRITY OF ALL WALL, CEILING, AND ROOF ASSEMBLIES ANY TIME THAT WORK IS NOT ACTIVELY BEING PERFORMED.
8. INSTALLATION OF DEVICES SHALL BE IN ACCORDANCE WITH MANUFACTURER'S INSTRUCTIONS. POWER LIMITED AND NON-POWER LIMITED FIELD WIRING MUST BE INSTALLED WITHIN THE FACP ENCLOSURE IN ACCORDANCE WITH MANUFACTURER'S INSTRUCTIONS AND NEC.
9. ALL WIRING SHALL BE INSTALLED ACCORDING TO NFPA 70 (NEC).
10. FIRE ALARM CIRCUITS SHALL BE IDENTIFIED IN ACCORDANCE WITH APPROPRIATE SECTION OF NEC 760. MARK ALL FIRE ALARM WIRES IN ACCORDANCE WITH NEC 760 SECTIONS FOR POWER LIMITED AND NON-POWER LIMITED WIRE.
11. FIRE ALARM CABLE INSTALLED IN DUCTS, PLENUM, AND OTHER SPACES USED FOR ENVIRONMENTAL AIR SHALL BE TYPE FPLP.
12. FIRE ALARM CABLE INSTALLED IN THE VERTICAL RUNS AND PENETRATE MORE THAN ONE FLOOR OR CABLES INSTALLED IN VERTICAL RUNS IN SHAFTS SHALL BE TYPE FPLR.
13. FIRE ALARM CABLE INSTALLED IN UNDERGROUND CONDUIT OR OTHER WET LOCATIONS SHALL BE UL LISTED FOR WET LOCATIONS.
14. FIRE ALARM CIRCUITS EXTENDING BEYOND ONE BUILDING AND RUN OUTDOORS SHALL BE INSTALLED IN ACCORDANCE WITH NFPA 70 ARTICLES 760, 770, 725 AND 800 WHERE APPLICABLE.
15. ALL WIRING, INCLUDING SHIELDS MUST BE DRY AND FREE OF SHORTS AND GROUNDS.
16. ALL SHIELDED WIRE MUST HAVE SHIELD CONTINUITY AT FULL LENGTH OF THE WIRE.
17. ONLY SYSTEM WIRING CAN BE RUN IN THE SAME CONDUIT.
18. 120VAC IS NOT PERMITTED IN THE SAME CONDUIT WITH LOW VOLTAGE WIRING.
19. ALL WIRING TO BE IN CONDUIT WITH FACTORY APPLIED RED FINISH.
20. PROVIDE DUCT DETECTORS IN SUPPLY AIR SYSTEMS.
21. PRE-FINAL & FINAL FIRE ALARM TESTING SHALL BE COORDINATED WITH HURLBURT AFB PERSONNEL.
22. ALL WIRING TO BE SOLID COPPER.
23. INSTALL SMOKE DETECTION ABOVE ALL CONTROL PANELS TO INCLUDE NAC EXTENDER PANELS AND EARLY SMOKE DETECTION CONTROL PANELS.
24. MONITORING MODULES FOR SINGLE SERVICE. DUAL INPUT NOT PERMITTED.
25. ALL CONDUIT TO BE NEW AND PROVIDED WITH A FACTORY APPLIED RED FINISH.
26. ALL FIRE ALARM CIRCUITS SHALL BE TERMINATED ON TERMINAL STRIPS. WIRE NUTS ARE PROHIBITED. ALL SIGNALLING LINE CIRCUITS (SLC) AND NOTIFICATION APPLIANCE CIRCUITS (NAC) ENTERING THE BUILDING AND AT THE FIRE ALARM PANEL SHALL BE PROVIDED WITH SUITABLE SURGE SUPPRESSORS (SEE SPECIFICATIONS)
27. THE CONTRACTOR SHALL NOTIFY THE CONTRACTING OFFICER 30 DAYS BEFORE THE PRELIMINARY AND ACCEPTANCE FIRE ALARM TESTS ARE TO BE CONDUCTED. THE TESTS SHALL BE IN ACCORDANCE WITH THE APPROVED TESTS PROCEDURES IN THE PRESENCE OF THE CONTRACTING OFFICER. THE CONTRACTOR SHALL FURNISH ALL INSTRUMENTS AND PERSONNEL REQUIRED FOR THE TESTS.
28. FIRE ALARM CONTRACTOR SHALL PROVIDE SHOP DRAWINGS IN ACCORDANCE WITH HURLBURT FIELD SPECIFICATIONS, INCLUDING BUT NOT LIMITED TO BATTERY POWER CALCULATIONS.

FIRE ALARM LEGEND

- FIRE ALARM SYSTEM MANUAL PULL STATION; SEE MOUNTING HEIGHT DETAIL THIS SHEET
- FIRE ALARM FLUSH CEILING MOUNTED HORN WITH CLEAR STROBE
- WALL MOUNTED CLEAR STROBE
- FIRE ALARM WALL MOUNTED HORN WITH CLEAR STROBE
- FIRE ALARM SYSTEM AUTOMATIC AIR DUCT SMOKE DETECTOR MOUNTED IN SUPPLY AIR DUCT
- FIRE ALARM REMOTE ANNUNCIATOR
- CARBON MONOXIDE DETECTOR
- ISOLATION VALVE – SUPERVISORY SWITCH. SWITCH SHALL REPORT AS SUPERVISORY SIGNAL

FIRE WATCH

COORDINATE ANY REQUIRED FIRE WATCH WITH BOTH THE FIRE PROTECTION CONTRACTOR AND GOVERNMENT. PROVIDE FIRE ALARM ASSISTANCE AS REQUIRED.

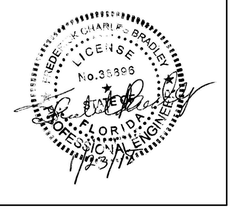

100% SUBMITTAL

REV #	DATE	DESCRIPTION

REPAIR BUILDING 90748, 23 SOWS

FIRE ALARM LEGEND AND GENERAL NOTES

AIR FORCE SPECIAL OPERATIONS COMMAND
1 SPECIAL OPERATIONS CIVIL ENGINEER SQUADRON
HURLBURT FIELD, FLORIDA

DATE: 16 JAN 2018
DESIGNED BY: BRADLEY
DRAWN BY: BAGWELL
BUILDING NUMBER: 90748
PROJECT NUMBER: FTEV 16-3001
SHEET REFERENCE: FA-001
SHEET NUMBER: 34 of 48

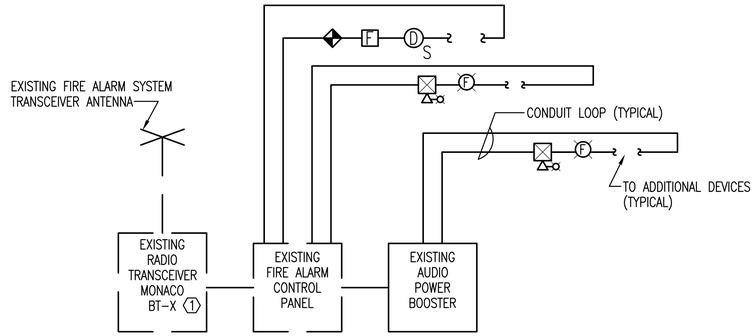

FIRE ALARM RISER DIAGRAM

NOT TO SCALE

FIRE ALARM SYSTEM GENERAL NOTES:

- THE FIRE ALARM SYSTEM SHALL BE WIRED STYLE D (CLASS A)
- FIRE ALARM SYSTEM CONDUCTORS SHALL BE AS RECOMMENDED BY THE FIRE ALARM SHOP DRAWING CALCULATIONS BUT SHALL BE NOT LESS THAN #16 AWG FOR INITIATING DEVICE AND SIGNALING LINE CIRCUITS AND #14 AWG FOR NOTIFICATION APPLIANCE CIRCUITS. INSTALL WIRING IN 3/4" CONDUIT MINIMUM.
- CONTRACTOR SHALL INSTALL NEW NAC POWER SUPPLIES AND AUDIO POWER BOOSTERS AS REQUIRED.

KEYNOTES:

1. INSTALL NEW MONACO BACKPLANE AND ZONE CARDS. AS REQUIRED TO SUPPORT ADDITIONAL ZONES.

GENERAL WALL MOUNTING NOTES

1. MOUNT MANUAL PULL STATION SO THAT OPERABLE LEVER IS BETWEEN 42" AND 48" ABOVE FINISHED FLOOR.
2. MOUNT STROBES SO THAT LENS IS NO MORE THAN 96" AFF AND NO LESS 80" THAN AFF.
3. MOUNT HORNS SO THAT TOP OF APPLIANCE IS A MINIMUM OF 90" AFF. ENSURE THAT HORN IS AT LEAST 6" BELOW CEILING.
4. MOUNT HORN STROBES IN ACCORDANCE WITH STROBE MOUNTING REQUIREMENTS.

NOTE: IN THE WAREHOUSE AREAS CEILING MOUNTED DEVICES SHALL BE INSTALLED TO THE BOTTOM OF STRUCTURAL BEAMS.

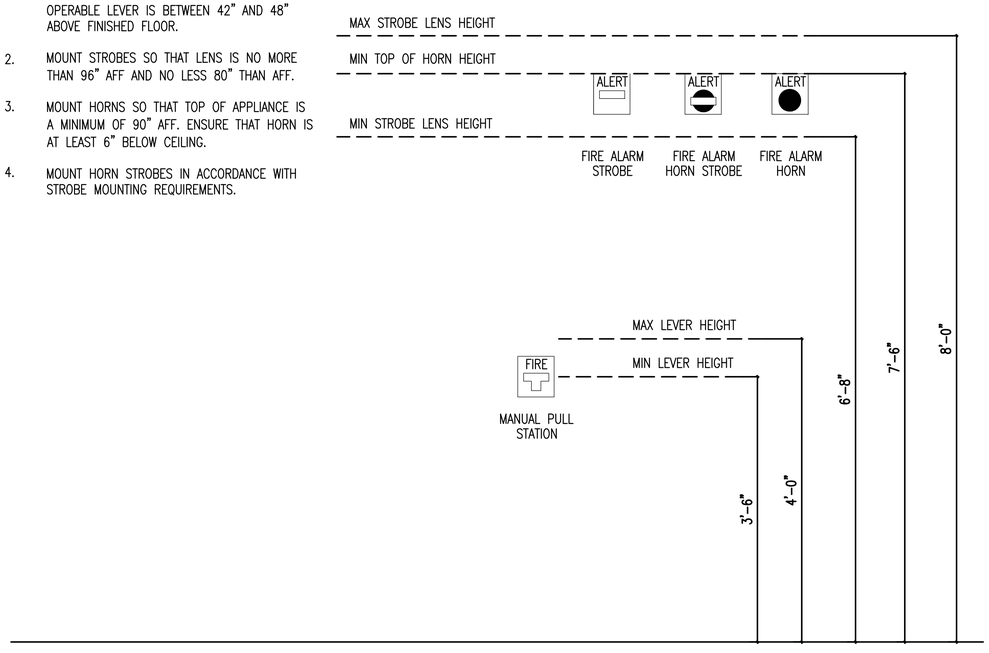

FIRE ALARM MOUNTING HEIGHT DETAIL

NOT TO SCALE

100% SUBMITTAL

REV #	DATE	DESCRIPTION

REPAIR BUILDING 90748, 23 SOWS

FIRE ALARM DETAILS AND RISER

AIR FORCE SPECIAL OPERATIONS COMMAND

1 SPECIAL OPERATIONS CIVIL ENGINEER SQUADRON

HURLBURT FIELD, FLORIDA

DATE: 16 JAN 2018

DESIGNED BY: BRADLEY

DRAWN BY: BAGWELL

BUILDING NUMBER: 90748

PROJECT NUMBER: FTEV 16-3001

SHEET REFERENCE: FA-002

SHEET NUMBER: 35 of 48

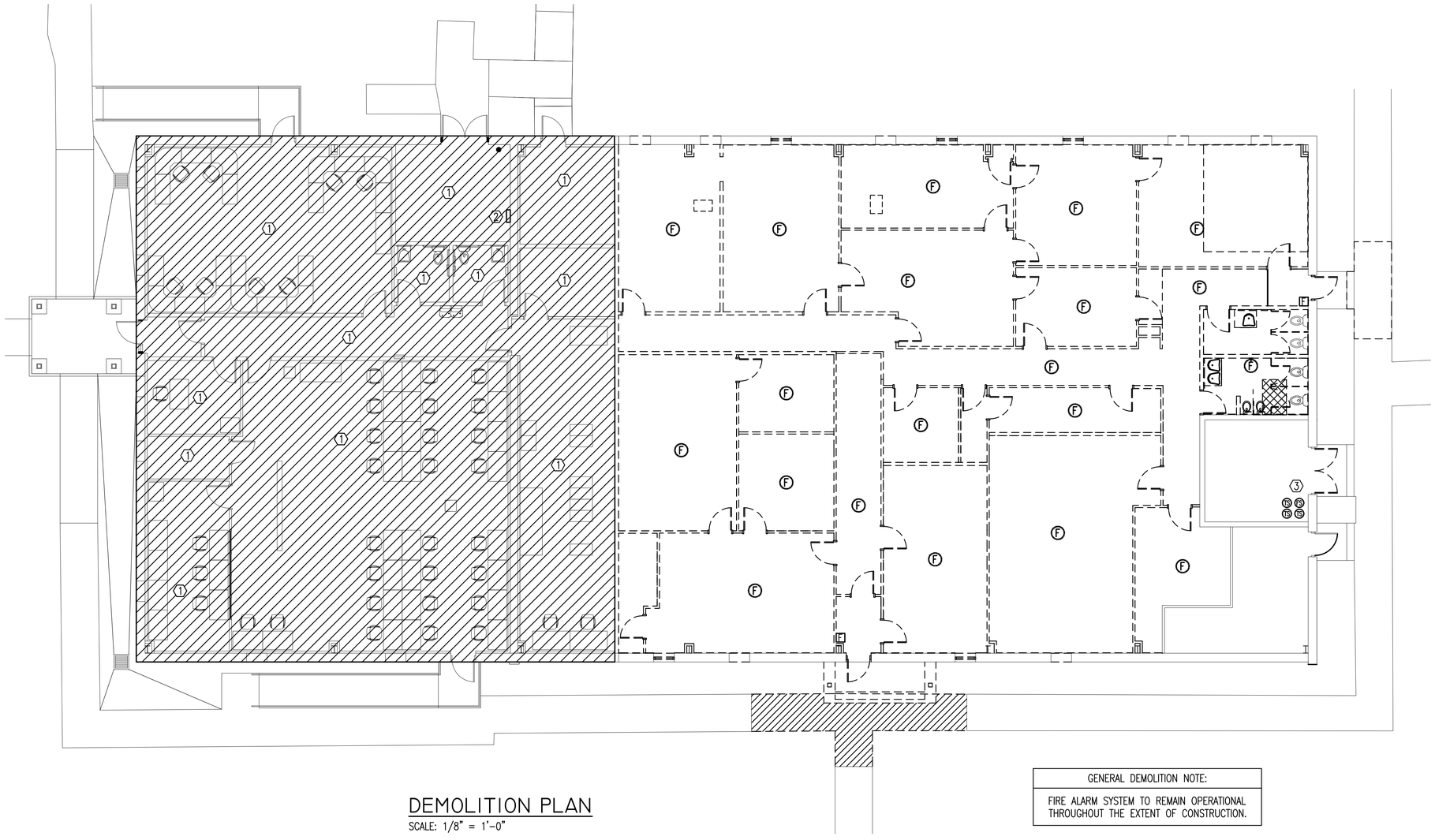

DEMOLITION PLAN

SCALE: 1/8" = 1'-0"

GENERAL DEMOLITION NOTE:
FIRE ALARM SYSTEM TO REMAIN OPERATIONAL THROUGHOUT THE EXTENT OF CONSTRUCTION.

DEMOLITION LEGEND

- (F) REMOVE EXISTING PULL STATION. EXISTING CONDUIT AND WIRE SHALL BE REMOVED BACK TO PANEL.
- (F) REMOVE EXISTING CEILING MOUNTED HORN/STROBE. EXISTING CONDUIT AND WIRE SHALL BE REMOVED BACK TO PANEL.
- (FS) EXISTING FLOW SWITCH TO REMAIN
- (TS) EXISTING TAMPER SWITCH TO REMAIN

KEYNOTES:

1. NO DEMOLITION WORK IN THIS AREA.
2. EXISTING NOTIFIER NFS 320 FIRE ALARM CONTROL PANEL TO REMAIN. PANEL SHALL REMAIN OPERATIONAL THROUGHOUT CONSTRUCTION.
3. EXISTING PULL STATION AND HORN/STROBE TO REMAIN IN MECHANICAL ROOM.

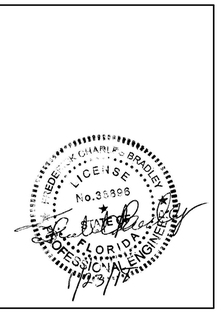

100% SUBMITTAL

REV #	DATE	DESCRIPTION

REPAIR BUILDING 90748, 23 SOWS

FIRE ALARM DEMOLITION PLAN

AIR FORCE SPECIAL OPERATIONS COMMAND

1 SPECIAL OPERATIONS CIVIL ENGINEER SQUADRON

HURLBURT FIELD, FLORIDA

DATE:	16 JAN 2018
DESIGNED BY:	BRADLEY
DRAWN BY:	BAGWELL
BUILDING NUMBER:	90748
PROJECT NUMBER:	FTEV 16-3001
SHEET REFERENCE:	FA-100
SHEET NUMBER:	36 of 48

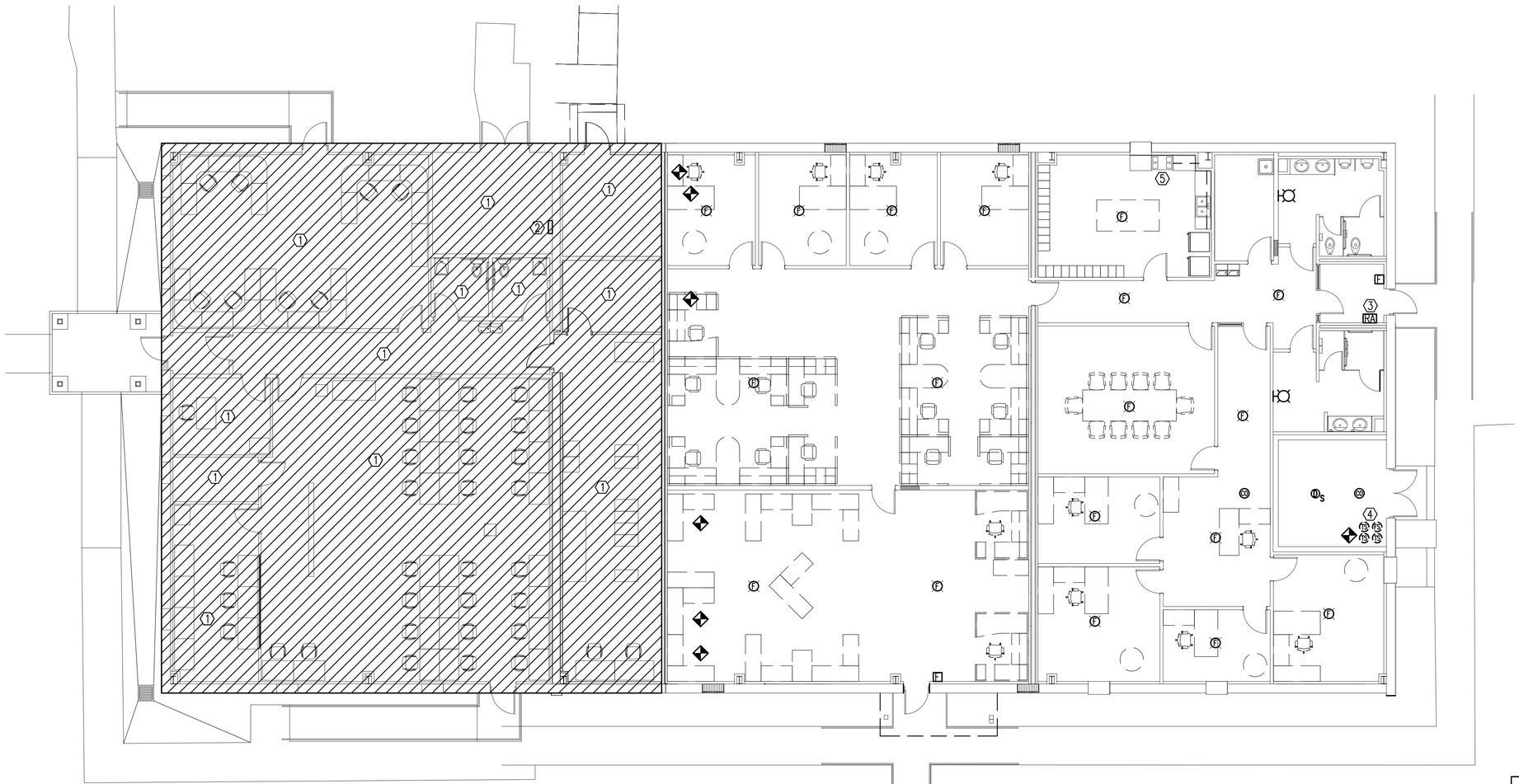

KEYNOTES:

1. NO FIRE ALARM WORK IN THIS AREA.
2. EXISTING NOTIFIER NFS 320 FIRE ALARM CONTROL PANEL TO REMAIN.
3. FIRE ALARM SYSTEM REMOTE ANNUNCIATOR.
4. EXISTING FLOW AND TAMPER SWITCHES, PULL STATION, AND HORN/STROBE SHALL REMAIN.
5. CONNECT THE RANGE HOOD FIRE SUPPRESSION SYSTEM TO THE FIRE ALARM CONTROL PANEL. ACTIVATION OF THE SUPPRESSION SYSTEM SHALL ACTIVATE THE FIRE ALARM SYSTEM.

NEW WORK FIRE ALARM PLAN

SCALE: 1/8" = 1'-0"

NEW WORK GENERAL NOTES

1. THE NEW DEVICES SHALL BE FULLY COMPATIBLE WITH THE EXISTING FA SYSTEM. SYSTEM IS A NOTIFIER NFS-320 PANEL.

FREDERICK CHARLES BRADLEY LICENSE No.35996 STATE OF FLORIDA PROFESSIONAL ENGINEER
12/3/17

100% SUBMITTAL

REV #	DATE	DESCRIPTION

REPAIR BUILDING 90748, 23 SOWS

FIRE ALARM NEW WORK PLAN

AIR FORCE SPECIAL OPERATIONS COMMAND
1 SPECIAL OPERATIONS CIVIL ENGINEER SQUADRON
HURLBURT FIELD, FLORIDA

DATE: 16 JAN 2018
DESIGNED BY: BRADLEY
DRAWN BY: BAGWELL
BUILDING NUMBER: 90748
PROJECT NUMBER: FTEV 16-3001
SHEET REFERENCE: FA-101
SHEET NUMBER: 37 of 48

ELECTRICAL GENERAL NOTES

1. ENTIRE ELECTRICAL INSTALLATION SHALL BE IN ACCORDANCE WITH THE LATEST ACCEPTED EDITION OF THE NATIONAL ELECTRICAL CODE AND ALL LOCAL CODES.
2. ALL ELECTRICAL WORK AND MATERIALS USED IN THIS PROJECT SHALL BE NEW, UNDERWRITERS' LABORITORIES (UL) LISTED AND LABELED, AND SHALL BE FURNISHED AND INSTALLED BY THE CONTRACTOR UNLESS NOTED OTHERWISE.
3. CONDUIT ROUTINGS AND DEVICE/EQUIPMENT LOCATIONS SHOWN ARE DIAGRAMMATIC ONLY, CONTRACTOR SHALL FIELD ROUTE AND LOCATE AS REQUIRED. CONDUIT ROUTINGS SHALL BE PARALLEL OR PERPENDICULAR TO BUILDING LINES.
4. THE CONDUIT SYSTEMS UTILIZED SHALL BE AS FOLLOWS:
   A) BELOW GRADE – PVC SCHEDULE 40.
   B) TRANSITIONS FROM BELOW GRADE (WHICH SHALL INCLUDE A "RSC" FACTORY 90 DEGREE ELBOW) TO ABOVE GRADE AND/OR THRU SLAB – RIGID GALVANIZED STEEL (RGS).
   C) INTERIOR OF BUILDING – ELECTRIC METALLIC TUBING (EMT) UNLESS NOTED OTHERWISE.
   D) EXTERIOR OF BUILDING EXPOSED ABOVE FINISHED GRADE – RIGID STEEL CONDUIT (RSC) UNLESS NOTED OTHERWISE.
   E) FINAL 36" OF CONDUIT CONNECTED TO MOTORS AND DRY TYPE TRANSFORMERS – LIQUIDTIGHT FLEXIBLE CONDUIT (LFMC).
5. ALL NEW CONDUITS RUN UNDERGROUND SHALL HAVE A MINIMUM BURIAL DEPTH OF 36" UNLESS NOTED OTHERWISE.
6. NEW CONDUITS LEAVING OR ENTERING BUILDING SHALL BE SEALED PER N.E.C. TO PREVENT ENTRANCE OF MOISTURE.
7. PAINT ALL NEW EXPOSED SURFACE RUN CONDUITS TO MATCH COLOR OF SURFACE UPON WHICH THEY ARE PLACED.
8. FURNISH 1/4" NYLON PULL ROPE IN ALL EMPTY CONDUITS FOR PULLING OF CONDUCTORS/CABLES.
9. PROVIDE RIGID PLASTIC INSULATED BUSHING ON END OF ALL TELECOMMUNICATIONS AND CABLE TV CONDUIT STUB-OUTS.
10. COORDINATE LOCATIONS OF ALL NEW ELECTRICAL EQUIPMENT, DEVICES, OUTLETS, FIXTURES, ETC., WITH ARCHITECTURAL PLANS, ELEVATIONS AND REFLECTED CEILING PLANS PRIOR TO ROUGH-IN WORK.
11. WHERE CONFLICTS OCCUR ON ELECTRICAL DRAWINGS BETWEEN DRAWINGS, SPECIFICATIONS AND CODES, THE MOST STRINGENT REQUIREMENT THAT APPLIES SHALL BE ADHERED TO.
12. ELECTRICAL CONTRACTOR SHALL FIELD VERIFY ALL EXISTING CONDITIONS PRIOR TO BEGINNING ANY WORK AND SHALL IMMEDIATELY NOTIFY THE GOVERNMENT INSPECTOR OF ANY DESCREPANCIES. FAILURE TO DO SO INDICATES THAT THE CONTRACTOR ACCEPTS THE CONDITIONS AS THEY EXIST AND SHALL PERFORM THE WORK AS SHOWN AND SPECIFIED.
13. CONTRACTOR SHALL COORDINATE ALL WORK WITH OTHER TRADES PRIOR TO INSTALLATION. REFER TO MECHANICAL AND PLUMBING DRAWINGS FOR EXACT LOCATION AND SIZE OF EQUIPMENT WHICH ARE PROVIDED BY OTHERS AND CONNECTED BY ELECTRICAL.
14. PROVIDE A 6'-0" MAXIMUM FLEXIBLE CONNECTION FROM EACH RECESSED LIGHTING FIXTURE TO OUTLET BOX ABOVE CEILING.
15. ALL NEW OUTLET BOXES FOR MOUNTING LIGHTING FIXTURES SHALL BE MINIMUM 4" SQUARE OR OCTAGONAL X 1 1/2" DEEP UNLESS NOTED OTHERWISE.
16. ALL OUTLET BOXES FOR NEW RECEPTACLES SHALL BE 4" SQUARE X 1 1/2" DEEP UNLESS NOTED OTHERWISE.
17. VERIFY ALL DOOR SWINGS WITH ARCHITECTURAL DRAWINGS PRIOR TO ROUGHING IN FOR SWITCHES.
18. NEW WALL OUTLETS SHALL NOT BE INSTALLED BACK TO BACK.
19. ALL NEW PANELBOARDS AND SAFETY SWITCH DISCONNECTS SHALL BE FURNISHED WITH LAMINATED PLASTIC NAMEPLATES. NAMEPLATES SHALL BE MELAMINE PLASTIC, 0.125" THICK, WHITE WITH BLACK CENTER CORE. SURFACE SHALL BE MATTE FINISHED. CORNERS SHALL BE SQUARE. ACCURATELY ALIGN LETTERING AND ENGRAVE INTO THE CORE. MINIMUM SIZE OF NAMEPLATES SHALL BE 1" X 2 1/2". LETTERING SHALL BE A MINIMUM OF .25" HIGH, NORMAL BLOCK STYLE. FASTEN NAMEPLATES WITH A MINIMUM OF TWO SHEET-METAL SCREWS OR TWO RIVETS, PER NAMEPLATE.
20. WORKING SPACE OF 36" FOR 208/120 VOLT SYSTEMS SHALL BE MAINTAINED IN FRONT OF ALL ELECTRICAL PANELS AND DEVICES.
21. NEW SAFETY SWITCH DISCONNECTS SHALL BE MOUNTED AT 48" A.F.F. TO CENTER AND SHALL HAVE 3'-0" MIN. OF WORKING SPACE IN FRONT OF DISCONNECT; COORDINATE WITH MECHANICAL CONTRACTOR AND EQUIPMENT LOCATIONS.
22. FINAL CONDUIT CONNECTIONS TO HEAT PUMPS, AIR HANDLERS, EXHAUST FANS, AND ELECTRIC WATER HEATERS SHALL BE LIQUID TIGHT FLEXIBLE METAL.
23. ALL NEW PANELBOARDS, MAIN BREAKER WHERE STIPULATED, SHALL NOT BE ALLOWED IN BRANCH BREAKER SPACES, MAIN BREAKER WILL ONLY BE PERMITTED ABOVE OR BELOW THE BRANCH BREAKER AREA.
24. BUSBARS ARE TO BE PROVIDED FOR ALL POLES INDICATED ON PANEL SCHEDULE, REGARDLESS OF WHETHER POLES ARE SHOWN WITH CIRCUIT BREAKERS OR "SPACE ONLY".
25. USE OF SERIES RATED CIRCUIT BREAKERS IS NOT ALLOWED.
26. USE OF PLUG-IN CIRCUIT BREAKERS IS NOT ALLOWED.
27. ALL PANELBOARDS SHALL BE FURNISHED WITH DOOR-IN-DOOR OR HINGED FRONT COVER CONSTRUCTION.
28. PROVIDE A TYPED PANELBOARD DIRECTORY FOR ALL ELECTRICAL PANELBOARDS IN THIS CONTRACT. MOUNT IN HOLDER BEHIND A TRANSPARENT PROTECTIVE COVERING. PANELBOARD DIRECTORIES SHALL INDICATE SOURCE OF FEEDER TO PANELBOARD (I.E.: PANEL "B" FED FROM PANEL "MP"). HANDWRITTEN PANELBOARD DIRECTORIES IS UNACCEPTABLE.
29. ALL PENETRATIONS/OPENINGS IN STC RATED WALLS SHALL BE SEALED WITH ACOUSTIC SEALANT RATED FOR USE WITH THAT PARTICULAR WALL.

ELECTRICAL LEGEND

CEILING OUTLETS

"A" RECESSED 2' X 4' LED MARK "A"

RECESSED 1' X 4' LED FIXTURE

PENDANT MOUNTED LED STRIP FIXTURE

JUNCTION BOX WITH BLANK SCREW COVER PLATE

RECESSED LED EMERGENCY LIGHT

CEILING MOUNTED EXIT LIGHT WITH DIRECTIONAL ARROWS

WALL OUTLETS

DUPLEX RECEPTACLE – 20 AMP, 125 VOLT, 2 POLE, 3 WIRE GROUNDED TYPE, NEMA 5-20R. MOUNT 18" A.F.F. TO C/L UNLESS NOTED OTHERWISE

G DUPLEX RECEPTACLE – 20 AMP, 125 VOLT, GFI, 2 POLE, 3 WIRE GROUNDED TYPE, NEMA 5-20R. MOUNT 18" A.F.F. TO C/L UNLESS NOTED OTHERWISE

G DUPLEX RECEPTACLE – 20 AMP, 125 VOLT, GFI, 2 POLE, 3 WIRE GROUNDED TYPE, NEMA 5-20R. MOUNT 6" TO C/L ABOVE COUNTER UNLESS NOTED OTHERWISE

DUPLEX RECEPTACLE – 20 AMP, 125 VOLT, 2 POLE, 3 WIRE GROUNDED TYPE, NEMA 5-20R. MOUNT 6" TO C/L ABOVE COUNTER UNLESS NOTED OTHERWISE

QUADRUPLEX RECEPTACLE – 20 AMP, 125 VOLT, 2 POLE, 3 WIRE GROUNDED TYPE, NEMA 5-20R. MOUNT 18" A.F.F. TO C/L UNLESS NOTED OTHERWISE

WATER COOLER DUPLEX RECEPTACLE – 20 AMP, 125 VOLT, GFI, 2 POLE, 3 WIRE GROUNDED TYPE, NEMA 5-20R. COORDINATE MOUNTING HEIGHT WITH WATER COOLER

DUPLEX RECEPTACLE – 20 AMP, 125 VOLT, 2 POLE, 3 WIRE GROUNDED TYPE, NEMA 5-20R. MOUNT 84" A.F.F. TO C/L

WALL MOUNTED EXIT LIGHT

250 VOLT RANGE RECEPTACLE, 50 AMP, 2 POLE, 3 WIRE GROUNDED TYPE, NEMA L6-50 COORDINATE MOUNTING HEIGHT WITH EQUIPMENT FURNISHED

WALL MOUNTED JUNCTION BOX

EMERGENCY LED WALL FIXTURE

WP DUPLEX RECEPTACLE – 20 AMP, 125 VOLT, GFI, 2 POLE, 3 WIRE GROUNDED TYPE, NEMA 5-20R. MOUNT 18" A.F.F UNLESS NOTED OTHERWISE. PROVIDE WEATHERPROOF BOX FOR RECEPTACLE.

EXTERIOR WALL MOUNTED FIXTURE

FLOOR OUTLETS

DUPLEX RECEPTACLE – 20 AMP, 125 VOLT, 2 POLE, 3 WIRE GROUNDED TYPE, NEMA 5-20R. MOUNTED IN THE FLOOR.

MULTIGANGED FLOOR BOX WITH DUPLEX RECEPTACLE AND DATA OUTLET; PROVIDE A SEPARATE 1" CONDUIT FOR DATA.

WALL SWITCHES (UNLESS OTHERWISE NOTED, MOUNT 48" A.F.F. TO C/L)

S A.C. TYPE, SINGLE POLE, 20 AMP, 120/277 VOLT

S3 A.C. TYPE, 3-WAY, 20 AMP, 120/277 VOLT

S_D A.C. TYPE, SINGLE POLE, 20 AMP, 120/277 VOLT DIMMER SWITCH

S_M MOTOR RATED TOGGLE SWITCH

S_R WALL MOUNTED DUAL TECHNOLOGY OCCUPANCY SENSOR

BRANCH CIRCUITING

RUN CONCEALED UNDER FLOOR

RUN CONCEALED IN CEILING OR WALLS

LA1-1 HOMERUN TO PANEL. ANY CIRCUIT WITHOUT FURTHER IDENTIFICATION INDICATES 2 #12, 1 #12 GROUND – 1/2" C; 3 #12, 1 #12 GROUND – 1/2" C; 4 #12, 1 #12 GROUND – 1/2" C; ETC. AS PER NEC. LETTERS AND NUMERALS INDICATE PANEL AND CIRCUIT NUMBER.

LIQUID-TIGHT FLEXIBLE CONDUIT CONNECTION

SURFACE MOUNTED CONDUIT; RUN PARALLEL OR PERPINDICULAR TO BUILDING LINES

MISCELLANEOUS

A.F.F. ABOVE FINISH FLOOR

WP WEATHERPROOF

U.N.O. UNLESS NOTED OTHERWISE

C/L CENTERLINE

SURFACE MOUNTED DEVICE

LOW VOLTAGE INTELLIGENT DIGITAL OCCUPANCY SENSOR WITH ASSOCIATED POWER PACK; DUAL TECHNOLOGY,

120/208V PANEL

NON-FUSIBLE DISCONNECT SWITCH; XX/YY/ZZ WHERE X INDICATES AMPERAGE, Y INDICATES # OF POLES, AND Z INDICATES NEMA RATING

CEILING TO FLOOR POWER POLE- INSTALL ONE DUPLEX RECEPTACLE – 20 AMP, 125 VOLT, 2 POLE, 3 WIRE GROUNDED TYPE, NEMA 5-20R, COORDINATE MOUNTING HEIGHT WITH EQUIPMENT FURNISHED.

TELECOMMUNICATIONS ROUGH-IN SYSTEM LEGEND

DEVICE SYMBOL	DESCRIPTION	MOUNTING HEIGHT AFF (UNO)
UNCLASSIFIED NETWORK DEVICES - ROUGH-IN ONLY		
	NIPRNET/VOICE OUTLET	18"
UNCLASSIFIED RACEWAY & SUPPORTING INFRASTRUCTURE - ROUGH-IN ONLY		
UCT	UNCLASS CABLE TRAY (CTx) - TYPE 'x'	SEE DETAILS; SCHEDULE
CLASSIFIED OR SPECIAL SYSTEMS NETWORK DEVICES - TYPE 'x' - ROUGH-IN ONLY		
	CLASSIFIED OUTLET IN PDS LOCKBOX	VARIES
CLASSIFIED OR SPECIAL SYSTEMS RACEWAY - ROUGH-IN ONLY		
SPB	PULL BOX - SECURED (S)	VARIES
LB	SECURE LOCKBOX	VARIES
ACCESS CONTROL SYSTEM (ACS) - ROUGH-IN ONLY		
CR	CARD READER	48"
INTRUSION DETECTION SYSTEM (IDS) - ROUGH-IN ONLY		
MD	CEILING MOUNTED MOTION DETECTOR	SEE DETAIL
BMS	BALANCED MAGNETIC SWITCH	SEE DETAIL
CABLE TV - ROUGH-IN ONLY		
C	CABLE TV OUTLET	84"

DAVID M. BAGWELL
LICENSED
No. 59251
1/5/18
STATE OF FLORIDA
PROFESSIONAL ENGINEER

100% SUBMITTAL

REV #	DATE	DESCRIPTION

REPAIR BUILDING 90748, 23 SOWS

ELECTRICAL/TELECOM LEGEND AND GENERAL NOTES

AIR FORCE SPECIAL OPERATIONS COMMAND
1 SPECIAL OPERATIONS CIVIL ENGINEER SQUADRON
HURLBURT FIELD, FLORIDA

DATE: 16 JAN 2018
DESIGNED BY: D. BAGWELL
DRAWN BY: CTK
BUILDING NUMBER: 90748
PROJECT NUMBER: FTEV 16-3001
SHEET REFERENCE: E-001
SHEET NUMBER: 38 of 48

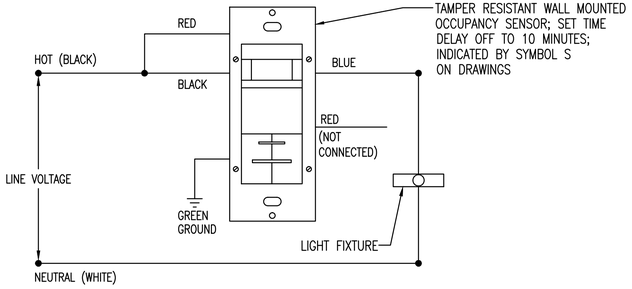

LIGHTING WALL MOUNTED INFRARED OCCUPANCY SENSOR DETAIL

NOT TO SCALE

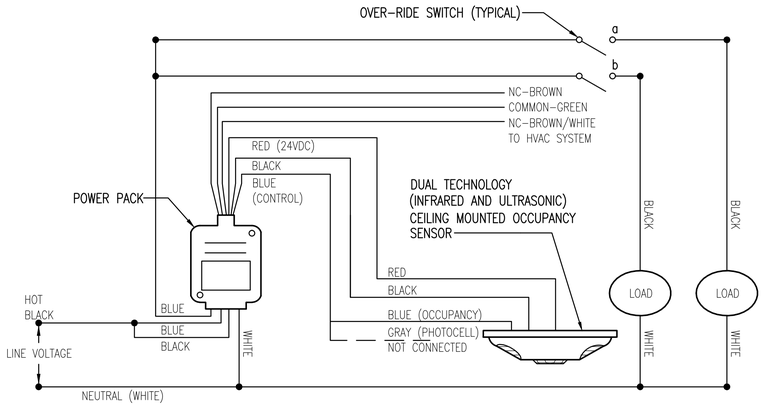

LIGHTING CEILING MOUNTED MOTION DETECTOR DETAIL

NOT TO SCALE

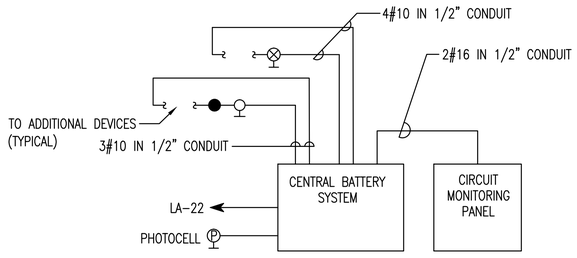

EMERGENCY LIGHTING DIAGRAM

NOT TO SCALE

EMERGENCY LIGHTING DIAGRAM NOTES

- EXIT LIGHTS SHALL BE CONFIGURED FOR ALWAYS ON OPERATION.
- CENTRAL BATTERY SYSTEM SHALL HAVE SELF-TEST DIAGNOSTICS.
- SYSTEM SHALL OPERATE AT 24VDC AND BATTERIES SHALL BE SIZED TO PROVIDED A MINIMUM OF 90 MINUTES OF EMERGENCY POWER.
- ALL LIGHTING CIRCUITS IN AREAS SERVED BY SHALL CENTRAL BATTERY SYSTEM SHALL BE ROUTED THROUGH CIRCUIT MONITORING PANEL.
- ALL WIRING MUST BE IN CONDUIT AND SEPARATE FROM NON-EMERGENCY LIGHTING CIRCUITS.
- PHOTOCELL SHALL CONTROL EXTERIOR LIGHTS; LIGHTS SHALL OPERATE ALL NIGHT AS A SECURITY LIGHT.

CENTRAL BATTERY DESIGN CALCULATIONS
EM = 7 WATTS
EM2 = 10 WATTS
EXIT = 2 WATTS

EM; 34 * 7 = 238 WATTS
EM2; 1 * 10 = 10 WATTS
EXIT; 10 * 2 = 10 WATTS

TOTAL = 258 WATTS

100% SUBMITTAL

REV #	DATE	DESCRIPTION

REPAIR BUILDING 90748, 23 SOWS

MOTION SENSOR DETAILS/EMERGENCY LIGHTING DIAGRAM

AIR FORCE SPECIAL OPERATIONS COMMAND
1 SPECIAL OPERATIONS CIVIL ENGINEER SQUADRON
HURLBURT FIELD, FLORIDA

DATE: 16 JAN 2018
DESIGNED BY: D. BAGWELL
DRAWN BY: CTK
BUILDING NUMBER: 90748
PROJECT NUMBER: FTEV 16-3001
SHEET REFERENCE: E-002
SHEET NUMBER: 39 of 48

FEATURES

LAMP TYPE: 4000K LED
PROFILE: LED (EM2)
WATTS: 10

OPTIONS: OPERATES FOR BOTH NORMAL AND EMERGENCY

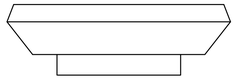

NOM. DIMENSIONS (10" W X 5" H)

GENERAL DESCRIPTION

HOUSING: RUGGED EXTRUDED ALUMINUM

ELECTRICAL: 24 VDC – POWERED FROM CENTRAL BATTERY SYSTEM
FINISH: WHITE ENAMEL OR POLYESTER POWDER COAT

WALL MOUNTED LED FIXTURE MARK 'B'

FEATURES

LAMP TYPE: LED
MOUNTING: CEILING RECESSED

PROFILE: 5000 LUMEN LED PACKAGE (LDI)

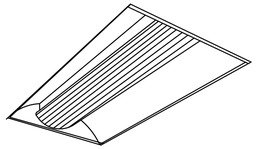

NOM. DIMENSIONS (24" W X 4' L X 6" D)

GENERAL DESCRIPTION

HOUSING: COLD ROLLED STEEL, FLANGE TO COORDINATE WITH CEILING; EXTRUDED ALUMINUM LENS FRAME, HINGED REMOVAL AND SPRING-LOADED CATCHES

REFLECTORS: HIGH REFLECTANCE GLOSS WHITE

ELECTRICAL: 120/277 VOLT DIMMING DRIVER (SEE LIGHTING FIXTURE SCHEDULE)

LED LIFE: 90% LED LUMEN MAINTENANCE AT 60,000 HOURS

RECESSED DIRECT/INDIRECT 2'x4' MARK 'A' LED FIXTURE

FEATURES

LAMP TYPE: LED
MOUNTING: UNIVERSAL
TYPE X IS WALL MOUNTED ABOVE DOOR
SHIELDING: FLAT SHEET ACRYLIC
LETTERS: RED

NOM. DIMENSIONS (11 3/8 " W X 7 7/8 " H X 1 3/4 " D)

GENERAL DESCRIPTION

HOUSING: DIE-CAST ALUMINUM. WHITE FINISH. HARDWARE FINISH TO MATCH HOUSING FINISH. 152 mm (6") H LETTERS WITH 19 mm (3/4") STROKE. DIRECTIONAL ARROWS AS REQUIRED.

ELECTRICAL: 24 VDC – POWERED FROM CENTRAL BATTERY SYSTEM

FINISH: WHITE

OTHER: MINIMUM BRIGHTNESS 20 CD/SQ METER ON FACE OF SIGN.

LED STENCIL FACE EXIT SIGN MARK 'G' & 'H'

FEATURES

LAMP TYPE: LED
SHIELDING: ACRYLIC PRISMATIC LENS

PROFILE: 5200 LUMES (FT)
NOM. DIMENSIONS (10" W X 4' L X 4 1/2" D)

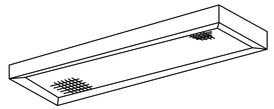

GENERAL DESCRIPTION

HOUSING: 0.026" MIN. THICKNESS FORMED STEEL HOUSING. BAKE WHITE ENAMEL FINISH. 85% MIN. REFLECTANCE (INTERIOR). ENTIRE HOUSING SHALL BE PAINTED WHITE.

MOUNTING: CEILING SURFACE

LENS: CLEAR EXTRUDED 100% ACRYLIC HAVING A MINIMUM OVERALL (BOTTOM OF LENS) THICKNESS OF 0.10 INCHES WITH A MAXIMUM PRISM PENETRATION DEPTH OF 0.07 INCHES (0.055 INCH MINIMUM OVERALL SIDE THICKNESS) AND WELDED END PLATES TO FORM A SINGLE PIECE, 5 SIDED BASKET.

ELECTRICAL: 120 VOLT DRIVER (SEE LIGHTING FIXTURE SCHEDULE)

LED RECESSED MOUNTED WRAP AROUND MARK 'D'

FEATURES

LAMP TYPE: LED
WATTAGE: 7 WATTS

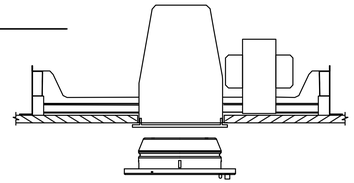

NOM. DIMENSIONS 4" DIAMETER

GENERAL DESCRIPTION

HOUSING: 4" DOWNLIGHT

MOUNTING: CEILING RECESSED

ELECTRICAL: 24 VDC – POWERED FROM CENTRAL BATTERY SYSTEM

LED LIFE: 50,000 HOURS

RECESSED LED DOWNLIGHT MARK 'C'

FEATURES

LAMP TYPE: 4000K LED
PROFILE: LED (LS)
NOM. DIMENSIONS (5" W X 4" H X 4' L)

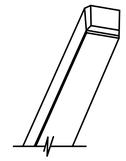

GENERAL DESCRIPTION

HOUSING: DIE-FORMED COLD ROLLED STEEL, DESIGNED FOR INDIVIDUAL OR CONTINUOUS ROW MOUNTING

REFLECTORS: GLOSS WHITE

ELECTRICAL: 120 VOLT DRIVER (SEE LIGHTING FIXTURE SCHEDULE)

FINISH: WHITE ENAMEL OR POLYESTER POWDER COAT

LED STRIP LIGHT MARK 'E'

LIGHTING FIXTURE SCHEDULE

CONTRACT DRAWING FIXTURE MARK	LAMP TYPE	FIXTURE MIN. LUMEN	FIXTURE VOLT	FIXTURE DESCRIPTION
A	LED	800	24VDC	RECESSED LED EMERGENCY LIGHT POWERED FROM CENTRAL BATTERY SYSTEM
B	LED	500	24VDC	EXTERIOR WALL MOUNTED LED EMERGENCY LIGHT POWERED FROM CENTRAL BATTERY SYSTEM
C	LED	5000	120	2'x4' RECESSED DIRECT/INDIRECT TROFFER
D	LED	5200	120	1'x4' SURFACE MOUNTER TROFFER
E	LED	3800	120	PENDANT MOUNTED LED INDUSTRIAL STRIP
G	LED	--	24VDC	LED EXIT LIGHT
H	LED	--	24VDC	LED EXIT LIGHT WITH DIRECTIONAL ARROWS

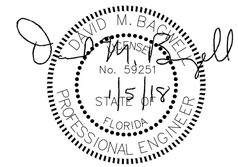

100% SUBMITTAL

REV #	DATE	DESCRIPTION

REPAIR BUILDING 90748, 23 SOWS

LIGHTING FIXTURE SCHEDULE AND DETAILS

AIR FORCE SPECIAL OPERATIONS COMMAND
1 SPECIAL OPERATIONS CIVIL ENGINEER SQUADRON
HURLBURT FIELD, FLORIDA

DATE: 16 JAN 2018
DESIGNED BY: D. BAGWELL
DRAWN BY: CTK
BUILDING NUMBER: 90748
PROJECT NUMBER: FTEV 16-3001
SHEET REFERENCE: E-003
SHEET NUMBER: 40 of 48

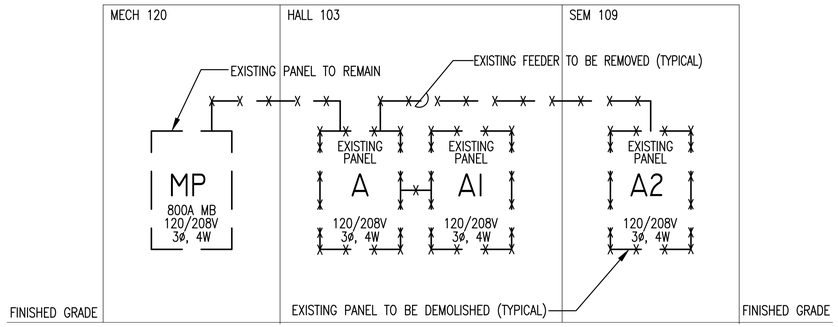

DEMOLITION POWER RISER DIAGRAM

NOT TO SCALE

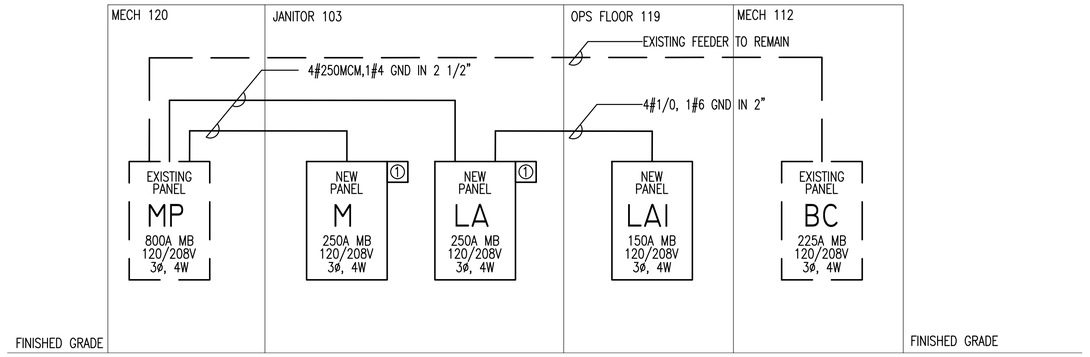

NEW WORK POWER RISER DIAGRAM

NOT TO SCALE

KEYNOTES:

① SURGE SUPPRESSOR: INSTALL PER MANUFACTURERS RECOMMENDATIONS

POWER PHASING NOTE:
A MAJORITY OF THE SOUTHERN PORTION OF THE BUILDING IS NOT UNDER CONSTRUCTION AND WILL REMAIN INHABITED DURING THE PROJECT. POWER SHALL REMAIN ON FOR EXISTING PANELS 'BC' AND PANEL 'MP' DURING THE BUILDINGS NORMAL WORKING HOURS. ANY POWER SHUTDOWNS SHALL BE COORDINATED AND AUTHORIZED WITH THE BUILDING USERS AND BASE CE PRIOR TO DE-ENERGIZING.

DAVID M. BAGWELL
No. 59251
STATE OF FLORIDA
PROFESSIONAL ENGINEER
1/15/18

100% SUBMITTAL

REV #	DATE	DESCRIPTION

REPAIR BUILDING 90748, 23 SOWS

POWER RISER DIAGRAM AND PANEL SCHEDULES

AIR FORCE SPECIAL OPERATIONS COMMAND
1 SPECIAL OPERATIONS CIVIL ENGINEER SQUADRON
HURLBURT FIELD, FLORIDA

DATE: 16 JAN 2018
DESIGNED BY: D. BAGWELL
DRAWN BY: CTK
BUILDING NUMBER: 90748
PROJECT NUMBER: FTEV 16-3001
SHEET REFERENCE: E-004
SHEET NUMBER: 41 of 48

CIRCUIT BREAKER PANEL SCHEDULE
EXISTING PANEL MP

120/208 VOLT 3ø 4W
800 AMP MAIN BREAKER

SURFACE MOUNTED
NEMA 1 ENCLOSURE

CKT	LOAD DESCRIPTION	BREAKER POLE	BREAKER AMP	KVA/PHASE A	KVA/PHASE B	KVA/PHASE C	KVA/PHASE A	KVA/PHASE B	KVA/PHASE C	BREAKER AMP	BREAKER POLE	LOAD DESCRIPTION	CKT
1										30	2	EXISTING DDC	2
3	SPARE	3	20										4
5													6
7										20	3	EXISTING AHU-2	8
9	EXISTING BOILER	3	20										10
11													12
13										30	3	EXISTING EXHAUST FAN	14
15	VAULT	3	60										16
17													18
19	EWH	2	30②							20	3	TVSS	20
21													22
23										20	1	EXISTING AHU-2 UV LIGHTS	24
25	SPARE	3	30							--	-	SPACE ONLY	26
27										--	-	SPACE ONLY	28
29	REC-MECH	1	20							--	-	SPACE ONLY	30
31							17.38						32
33	EXISTING PANEL BC	3	225					20.00		①250	3	PANEL 'LA'	34
35									19.09				36
37							23.06						38
39	EXISTING ACC-2	3	175					24.88		①250	3	PANEL 'M'	40
41									23.88				42

	A	B	C
EXISTING CONNECTED KVA	19.8	19.8	19.8
TOTAL ADDED KVA	40.44	44.88	43.97
TOTAL KVA	60.24	64.68	63.77

MINIMUM INTERRUPTING CAPACITY: 42,000 AMPS SYMMETRICAL

① INSTALL NEW 250A/3 POLE BREAKER; EXISTING CIRCUIT WILL BE REMOVED DURING DEMOLITION.
② INSTALL NEW 30A/2 POLE BREAKER; IN EXISTING SPACE/BREAKER

1. ALL CIRCUITS ARE EXISTING TO REMAIN UNLESS NOTED OTHERWISE.
2. BREAKERS THAT ARE NOT BEING UTILIZED AFTER NEW CONSTRUCTION SHALL BE TURNED OFF AND LABELED AS SPARE

CIRCUIT BREAKER PANEL SCHEDULE
PANEL M

120/208 VOLT 3ø 4W
250 AMP MAIN BREAKER

SURFACE MOUNTED
NEMA 1 ENCLOSURE

CKT	LOAD DESCRIPTION	BREAKER POLE	BREAKER AMP	KVA/PHASE A	KVA/PHASE B	KVA/PHASE C	KVA/PHASE A	KVA/PHASE B	KVA/PHASE C	BREAKER AMP	BREAKER POLE	LOAD DESCRIPTION	CKT
1	EF-1	1	20	1.18			5.8						2
3					.94			5.8		90	3	AHU-2	4
5	HWP-1	3	15			.94			5.8				6
7				.94			.25			20	1	EF-1	8
9	WH-1	2	30		2.25			13.73					10
11						2.25			13.73	175	3	ACC-2	12
13	SPARE	1	20				13.73						14
15	SPARE	1	20					1.0		20	1	VAV	16
17	SPACE ONLY	-	--						.58				18
19	SPACE ONLY	-	--				.58			15	3	CHWP-2	20
21	SPACE ONLY	-	--					.58					22
23	SPACE ONLY	-	--						.58				24
25	SPACE ONLY	-	--				.58			15	3	CHWP-3	26
27	SPACE ONLY	-	--					.58					28
29	SPACE ONLY	-	--							--	-	SPACE ONLY	30

	A	B	C
TOTAL CONNECTED KVA	23.06	24.88	23.88

MINIMUM INTERRUPTING CAPACITY: 22,000 AMPS SYMMETRICAL

CIRCUIT BREAKER PANEL SCHEDULE
PANEL LA

120/208 VOLT 3ø 4W
250 AMP MAIN BREAKER

SURFACE MOUNTED
NEMA 1 ENCLOSURE

CKT	LOAD DESCRIPTION	BREAKER POLE	BREAKER AMP	KVA/PHASE A	KVA/PHASE B	KVA/PHASE C	KVA/PHASE A	KVA/PHASE B	KVA/PHASE C	BREAKER AMP	BREAKER POLE	LOAD DESCRIPTION	CKT
1	REC-WATER FOUNTAIN	1	20	.50			.90			20	1	REC-JANITOR/MEN/WOMEN	2
3	REC-REFRIGERATOR	1	20		1.0			.72		20	1	REC-HALL	4
5	REC-REFRIGERATOR	1	20			1.0			.72	20	1	REC-CONFERENCE/TRAINING	6
7	REC-BREAK	1	20	.5			.54			20	1	REC-CONFERENCE/TRAINING	8
9	REC-BREAK	1	20		.5			.72		20	1	REC-DO	10
11	REC-BREAK	1	20			.5			.90	20	1	REC-COMMANDER	12
13	REC-BREAK	1	20	.72			.72			20	1	REC-1ST SGT	14
15	RANGE	2	50		4.8			.50		20	1	REC-SEM	16
17						4.8			.54	20	1	REC-RECEPTION	18
19	LTS-BREAK/JAN/MEN/WOMEN/HALL	1	20	0.8			.95			20	1	LTS-CONF/DO/COMM/1ST SGT/SEM	20
21	REC-PRINTER	1	20		0.5			1.0		20	1	CENTRAL BATTERY SYSTEM	22
23	REC-BREAK	1	20			.5				20	1	SPARE	24
25	REC-CONFERENCE	1	20	1.0			.54			20	1	REC-EXTERIOR	26
27	SPARE	1	20					1.2		①20	1	GARBAGE DISPOSAL	28
29	SPARE	1	20							20	1	SPARE	30
31	SPARE	1	20							20	1	SPARE	32
33	SPARE	1	20							20	1	SPARE	34
35	SPARE	1	20							20	1	SPARE	36
37				10.21									38
39	PANEL 'LA1'	3	150		9.06					30	3	SURGE SUPPRESSOR	40
41						11.13							42

	A	B	C
TOTAL CONNECTED KVA	17.38	20.00	19.09

① INSTALL GFI BREAKER

MINIMUM INTERRUPTING CAPACITY: 22,000 AMPS SYMMETRICAL

CIRCUIT BREAKER PANEL SCHEDULE
PANEL LA1

120/208 VOLT 3ø 4W
150 AMP MAIN BREAKER

RECESSED MOUNTED
NEMA 1 ENCLOSURE

CKT	LOAD DESCRIPTION	BREAKER POLE	BREAKER AMP	KVA/PHASE A	KVA/PHASE B	KVA/PHASE C	KVA/PHASE A	KVA/PHASE B	KVA/PHASE C	BREAKER AMP	BREAKER POLE	LOAD DESCRIPTION	CKT
1	REC-SYSTEM FURNITURE STANEVAL	1	20①	1.0			1.08			20	1	REC-WXT	2
3	REC-SYSTEM FURNITURE STANEVAL	1	20①		1.0			.54		20	1	REC-STANEVAL	4
5	REC-SYSTEM FURNITURE STANEVAL	1	20①			1.0			1.08	20	1	REC-OIC	6
7	REC-SYSTEM FURNITURE STANEVAL	1	20①	1.0			1.0			20	1	REC-STANEVAL	8
9	REC-STANEVAL	1	20		.5			1.08		20	1	REC-NCOIC	10
11	REC-STANEVAL	1	20			.5			1.0	20	1	REC-STANEVAL	12
13	REC-STANEVAL	1	20	.5			1.08			20	1	REC-TEAM ROOM	14
15	REC-OPS FLOOR	1	20		1.0			1.0		20	1	REC-STANEVAL	16
17	REC-OPS FLOOR	1	20			1.0			1.0	20	1	REC-OPS FLOOR	18
19	REC-OPS FLOOR	1	20	1.0			1.0			20	1	REC-OPS FLOOR	20
21	REC-OPS FLOOR	1	20		0.5			1.0		20	1	REC-OPS FLOOR	22
23	REC-PRINT OPS FLOOR	1	20			1.0			1.0	20	1	REC-PRINT OPS FLOOR	24
25	IDS PANEL	1	20				1.0			20	1	REC-PRINT OPS FLOOR	26
27	SPARE	1	20					1.0		20	1	IDS PANEL	28
29	LTS-OPS FLOOR	1	20			.55			1.0	20	1	IPS CONTAINER IN COMM RM 121	30
31	LTS-STANEVAL	1	20	.55						20	1	SPARE	32
33	LTS-WXT/OIC/NCOIC/TEAM ROOM	1	20		.44					20	1	SPARE	34
35	REC-SYSTEM FURNITURE STANEVAL	1	20①			1.0				20	1	SPARE	36
37	REC-SYSTEM FURNITURE STANEVAL	1	20①	1.0						20	1	SPARE	38
39	REC-SYSTEM FURNITURE STANEVAL	1	20①		1.0					20	1	SPARE	40
41	REC-SYSTEM FURNITURE STANEVAL	1	20①			1.0				20	1	SPARE	42

	A	B	C
TOTAL CONNECTED KVA	10.21	9.06	11.13

① INSTALL A HANDLE TIE

MINIMUM INTERRUPTING CAPACITY: 22,000 AMPS SYMMETRICAL

SERVICE LOAD CALCULATION

EXISTING MAX METER DEMAND READING FOR AREA REMAINING: .74
METER MULTIPLIER: 80

MAXIMUM KW: 59.2
MAXIMUM AMPS: 164.5

MAXIMUM KW * 1.25 + ADDED LOAD = NEW LOAD
59.2 * 1.25 + 125.11 = 199.11 KW = 553.1 AMPS

DAVID M. BAGWELL
LICENSED
No. 59251
STATE OF FLORIDA
PROFESSIONAL ENGINEER
1/5/18

100% SUBMITTAL

REV #	DATE	DESCRIPTION

REPAIR BUILDING 90748,
23 SOWS

PANEL SCHEDULES

AIR FORCE SPECIAL OPERATIONS COMMAND
1 SPECIAL OPERATIONS CIVIL ENGINEER SQUADRON
HURLBURT FIELD, FLORIDA

DATE: 16 JAN 2018
DESIGNED BY: D. BAGWELL
DRAWN BY: CTK
BUILDING NUMBER: 90748
PROJECT NUMBER: FTEV 16-3001
SHEET REFERENCE: E-005
SHEET NUMBER: 42 of 48

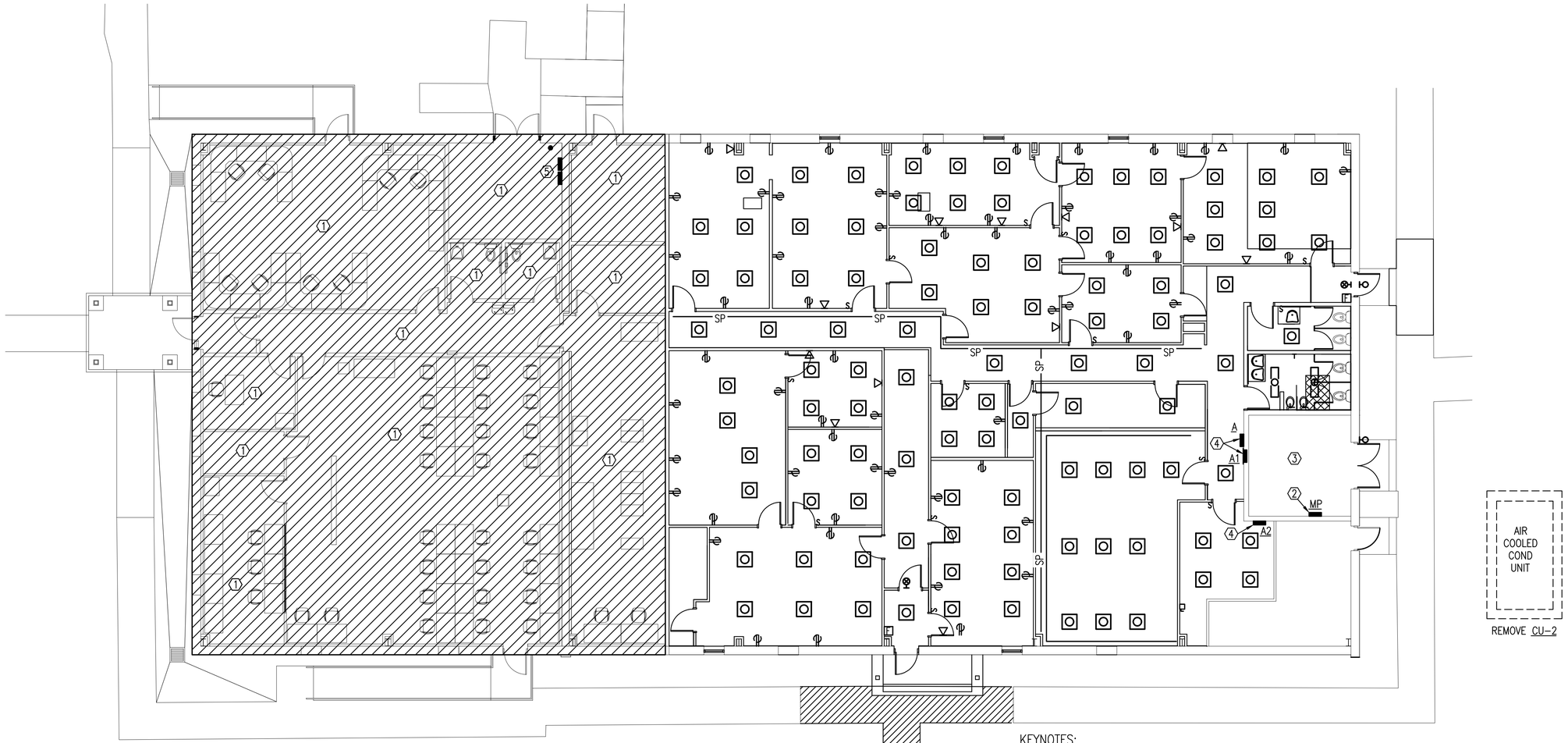

ELECTRICAL DEMOLITION PLAN

SCALE: 1/8" = 1'-0"

KEYNOTES:

1. NO ELECTRICAL DEMOLITION WORK IN THIS AREA.
2. EXISTING PANEL 'MP' TO REMAIN.
3. ALL ABANDONED AND UNUSED CONDUIT AND WIRE SHALL BE COMPLETELY REMOVED FROM EXISTING MECHANICAL ROOM. REMOVE WIRE AND CONDUIT FROM MECHANICAL EQUIPMENT BEING REMOVED.
4. DEMOLISH PANEL AND ALL ASSOCIATED CONDUIT AND CONDUCTORS
5. EXISTING PANEL BC TO REMAIN.

DEMOLITION NOTES

1. ALL EXISTING SYSTEMS AND CONDITIONS SHOWN ON THE PLANS ARE APPROXIMATE. THE EXISTING ELECTRICAL CIRCUITS OF POWER, RECEPTACLES, LIGHTING, ETC. BEING REMOVED MAY NOT BE SHOWN ON THESE DOCUMENTS, BUT ARE TO BE REMOVED AS REQUIRED TO BUILD THIS PROJECT AND TO PERMIT NEW FINISHES, WALLS, ETC. THE CONTRACTOR SHALL FIELD VERIFY ALL CONDITIONS PRIOR TO BEGINNING ANY WORK AND SHALL NOTIFY THE ARCHITECT OF DISCREPANCIES. FAILURE TO DO SO INDICATES THAT THE CONTRACTOR ACCEPTS THE CONDITIONS AS THEY EXIST AND SHALL PERFORM ANY ADDITIONAL WORK NECESSARY TO PERFORM THE WORK AS SHOWN AND SPECIFIED.
2. THE EXISTING GENERAL POWER BRANCH CIRCUITS AND DEVICES SHALL BE BE DISCONNECTED AND REMOVED FROM AREAS TO BE RENOVATED. EXISTING EXISTING PANELBOARDS AND FEEDERS SHALL REMAIN UNLESS NOTED OTHERWISE.
3. REMOVE ALL DISCONNECTS, WIRING, AND CONDUITS SERVING MECHANICAL AND PLUMBING EQUIPMENT BEING REMOVED OR RELOCATED. SEE MECHANICAL AND PLUMBING PLANS.
4. ALL EXISTING GENERAL LIGHTING AND EGRESS LIGHTING FIXTURES SHALL BE DISCONNECTED AND REMOVED. EXISTING WIRING AND CONDUIT MAY BE REUSED WHERE POSSIBLE.
5. CONTRACTOR SHALL IDENTIFY ALL UNUSED CONDUIT AND WIRING. ALL ABANDONED CONDUIT AND WIRING LOCATED ABOVE CEILING SHALL BE COMPLETELY REMOVED.
6. ALL FLUORESCENT BULBS AND BALLASTS BEING REMOVED SHALL BE DISPOSED OF PROPERLY.
7. ALL BATTERIES IN EMERGENCY FIXTURES SHALL BE RECYCLED.
8. EXISTING SYSTEMS FURNITURE POWER CONNECTIONS SHALL BE TURNED OVER TO THE FACILITY USER.

DEMOLITION LEGEND

- REMOVE EXISTING 2'x2' FLUORESCENT FIXTURE. EXISTING CONDUIT AND WIRE SHALL BE REMOVED BACK TO PANEL.
- REMOVE EXISTING 1'x4' FLUORESCENT FIXTURE. EXISTING CONDUIT AND WIRE SHALL BE REMOVED BACK TO PANEL.
- REMOVE EXISTING EXIT LIGHT. EXISTING CONDUIT AND WIRE SHALL BE REMOVED BACK TO PANEL.
- REMOVE EXISTING WALL BRACKET FIXTURE. EXISTING CONDUIT AND WIRE SHALL BE REMOVED BACK TO PANEL.
- S REMOVE EXISTING SWITCH. EXISTING CONDUIT AND WIRE SHALL BE REMOVED BACK TO PANEL.
- REMOVE EXISTING DUPLEX RECEPTACLE. EXISTING CONDUIT AND WIRE SHALL BE REMOVED BACK TO PANEL.
- REMOVE EXISTING DATA OUTLET. EXISTING CONDUIT AND WIRE SHALL BE REMOVED BACK TO PANEL.
- REMOVE EXISTING ELECTRICAL DISCONNECT. EXISTING CONDUIT AND WIRE SHALL BE REMOVED BACK TO PANEL.
- REMOVE EXISTING SURFACE MOUNTED RECEPTACLE RACEWAY.
- SP REMOVE EXISTING SIPR PDS.

DAVID M. BAGWELL
No. 59251
STATE OF FLORIDA
PROFESSIONAL ENGINEER
1/15/18

100% SUBMITTAL

REV #	DATE	DESCRIPTION

REPAIR BUILDING 90748, 23 SOWS

ELECTRICAL DEMOLITION PLAN

AIR FORCE SPECIAL OPERATIONS COMMAND
1 SPECIAL OPERATIONS CIVIL ENGINEER SQUADRON
HURLBURT FIELD, FLORIDA

DATE: 16 JAN 2018
DESIGNED BY: D. BAGWELL
DRAWN BY: CTK
BUILDING NUMBER: 90748
PROJECT NUMBER: FTEV 16-3001
SHEET REFERENCE: E-100
SHEET NUMBER: 43 of 48

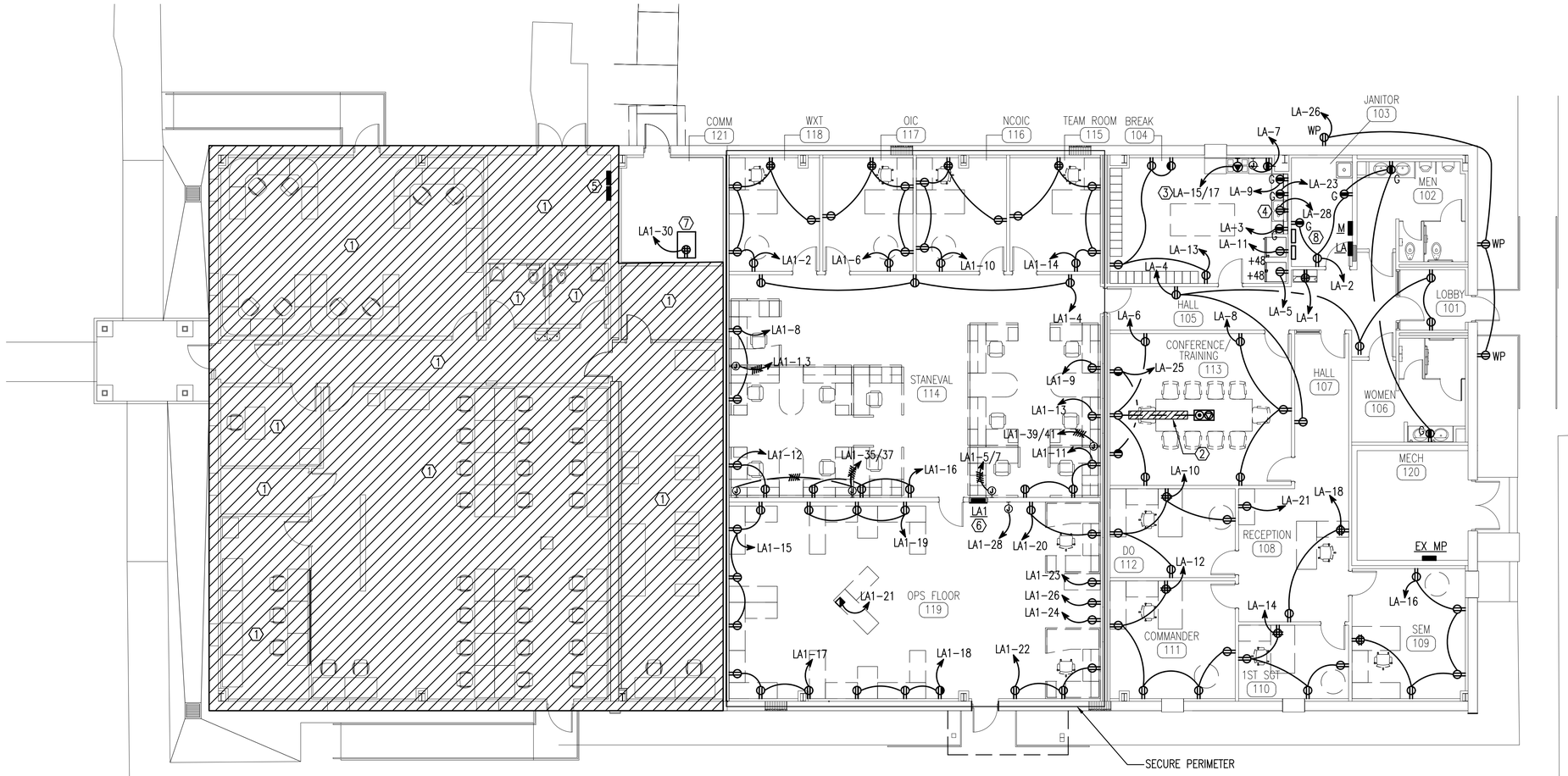

NEW WORK POWER PLAN

SCALE: 1/8" = 1'-0"

SYSTEMS FURNITURE NOTE:
COORDINATE SYSTEMS FURNITURE CONNECTIONS WITH GOVERNMENT REPRESENTATIVES PRIOR TO ROUGH-IN.

KEYNOTES:

1. NO NEW ELECTRICAL WORK IN THIS AREA.
2. CUT AND PATCH AS REQUIRED TO INSTALL NEW FLOOR OUTLET.
3. 3#6, 1#10 GND IN 1"C.
4. RECEPTACLE FOR GARBAGE DISPOSAL. COORDINATE EXACT LOCATION UNDER COUNTER WITH CABINET INSTALLERS.
5. EXISTING PANEL BC TO REMAIN. DO NOT DISTURB FEEDER FROM EXISTING PANEL MP.
6. PANEL LA1 SHALL OPEN INTO OPS FLOOR 119.
7. INSTALL QUAD RECEPTACLE INSIDE THE IPS CONTAINER.
8. PROVIDE MARKING ON FLOOR IN FRONT OF PANELBOARDS SHOWING "DO NOT STORE ANYTHING IN FRONT OF ELECTRICAL PANELS".

DAVID M. BAGWELL
No. 59251
STATE OF FLORIDA
PROFESSIONAL ENGINEER
1/5/18

100% SUBMITTAL

REV #	DATE	DESCRIPTION

REPAIR BUILDING 90748, 23 SOWS

NEW WORK POWER PLAN

AIR FORCE SPECIAL OPERATIONS COMMAND
1 SPECIAL OPERATIONS CIVIL ENGINEER SQUADRON
HURLBURT FIELD, FLORIDA

DATE: 16 JAN 2018
DESIGNED BY: D. BAGWELL
DRAWN BY: CTK
BUILDING NUMBER: 90748
PROJECT NUMBER: FTEV 16-3001
SHEET REFERENCE: E-200
SHEET NUMBER: 44 of 48

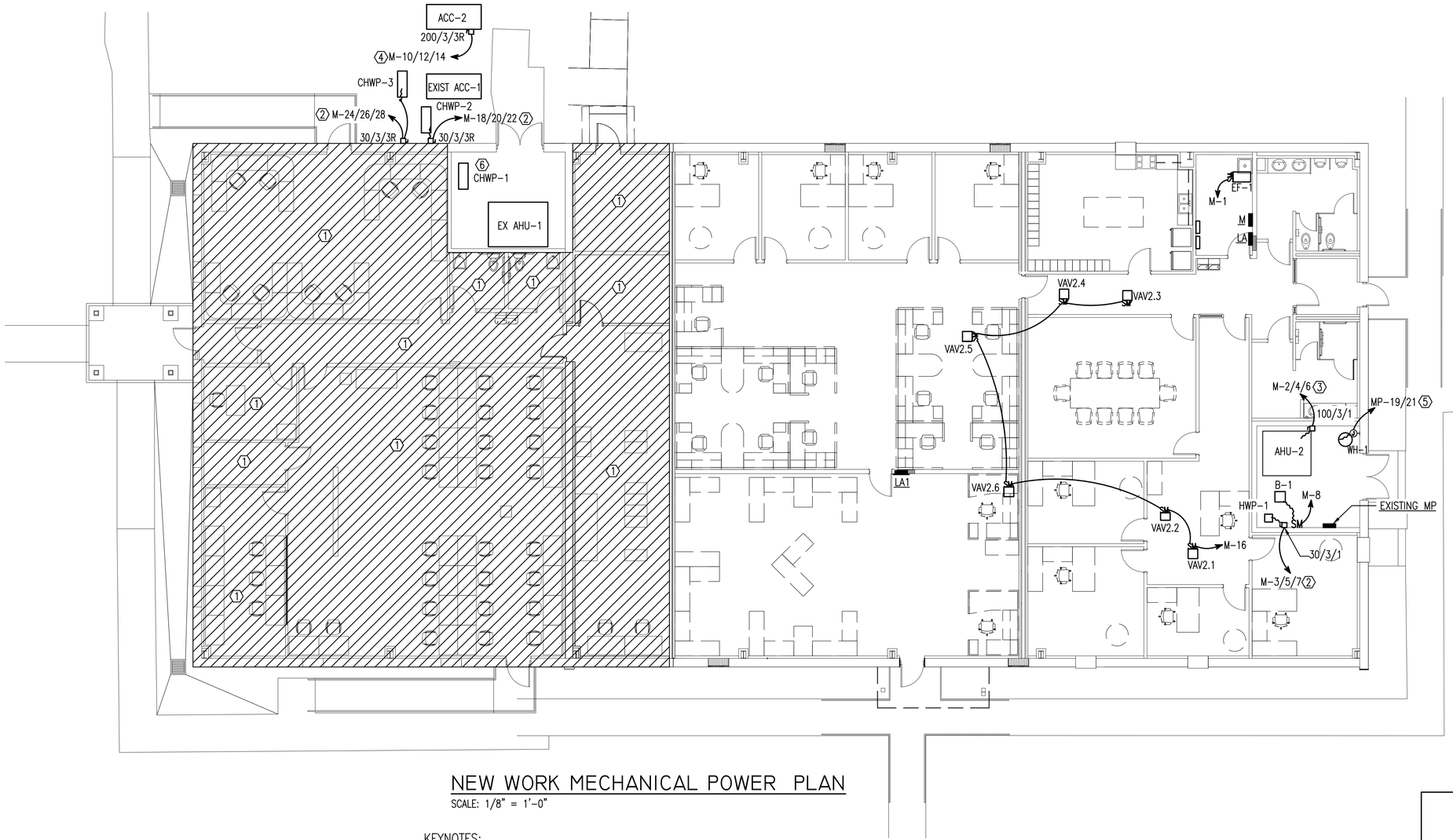

NEW WORK MECHANICAL POWER PLAN

SCALE: 1/8" = 1'-0"

KEYNOTES:

1. NO NEW MECHANICAL WORK IN THIS AREA.
2. 3#12, 1#12 GND IN 3/4"
3. 3#2, 1#8 GND IN 1 1/4"
4. 3#3/0, 1#6 GND IN 2"
5. 2#10, 1#10 GND IN 1/2"
6. THE EXISTING CHILLED WATER PUMP IS BEING REPLACED. DISCONNECT POWER TO THE EXISTING PUMP AND RECONNECT POWER TO THE NEW PUMP.

DAVID M. BAGWELL
No. 59251
STATE OF FLORIDA
PROFESSIONAL ENGINEER
1/5/18

100% SUBMITTAL

REV #	DATE	DESCRIPTION

REPAIR BUILDING 90748, 23 SOWS

NEW WORK MECHANICAL POWER PLAN

AIR FORCE SPECIAL OPERATIONS COMMAND
1 SPECIAL OPERATIONS CIVIL ENGINEER SQUADRON
HURLBURT FIELD, FLORIDA

DATE: 16 JAN 2018
DESIGNED BY: D. BAGWELL
DRAWN BY: CTK
BUILDING NUMBER: 90748
PROJECT NUMBER: FTEV 16-3001
SHEET REFERENCE: E-201
SHEET NUMBER: 45 of 48

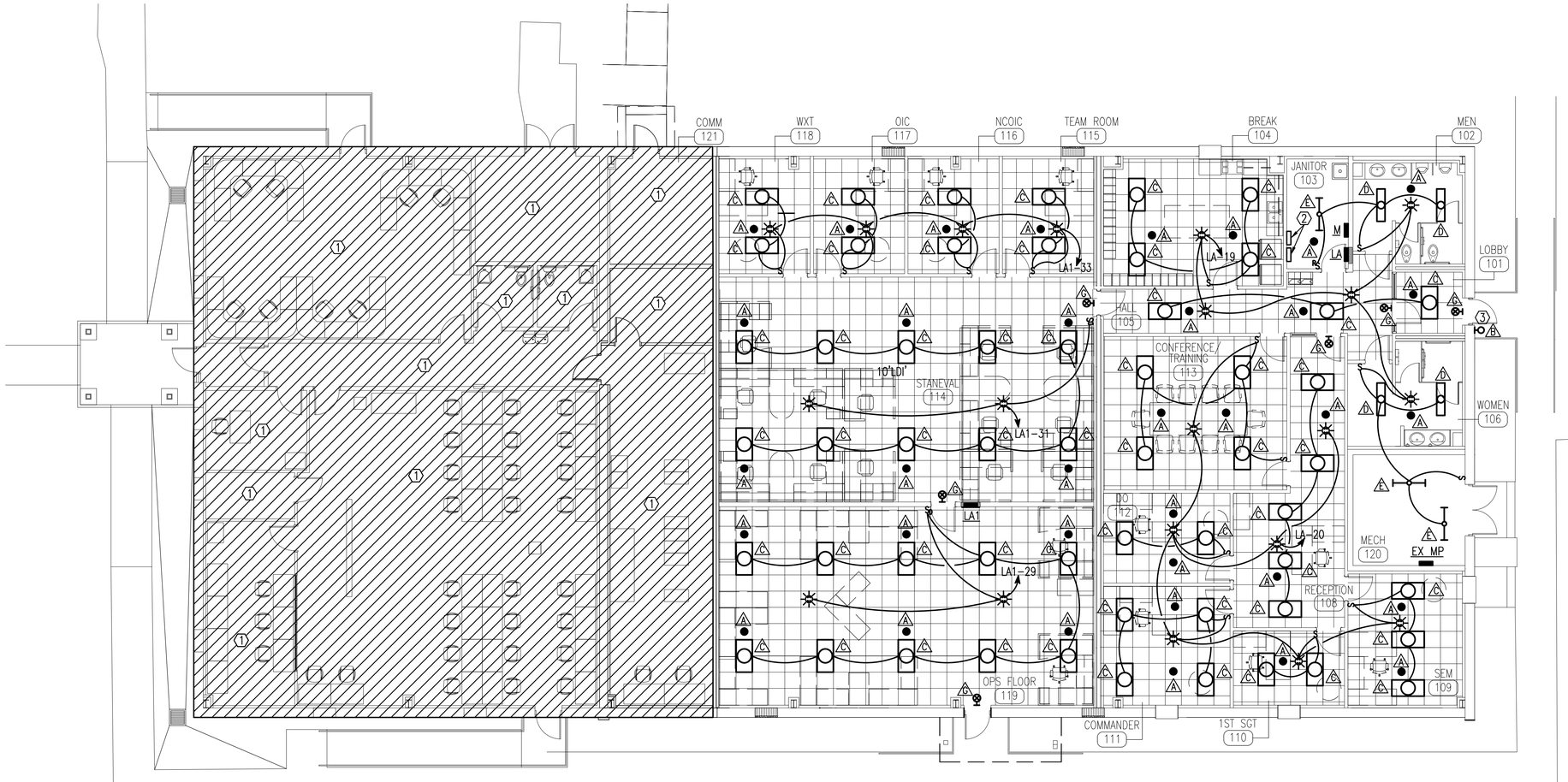

NEW WORK LIGHTING PLAN

SCALE: 1/8" = 1'-0"

KEYNOTES:

1. NO DEMOLITION WORK IN THIS AREA.
2. EMERGENCY LIGHTING BATTERY SYSTEM.
3. COORDINATE MOUNTING HEIGHT OF LIGHT FIXTURE WITH NEW CANOPY. LIGHT FIXTURE MOUNTING SHALL BE BELOW CANOPY STRUCTURE SO NOT TO INHIBIT LIGHT OUTPUT.

DAVID M. BAGWELL
LICENSED
No. 59251
1/5/18
STATE OF FLORIDA
PROFESSIONAL ENGINEER

100% SUBMITTAL

REV #	DATE	DESCRIPTION

REPAIR BUILDING 90748,
23 SOWS

NEW WORK LIGHTING PLAN

AIR FORCE SPECIAL OPERATIONS COMMAND
1 SPECIAL OPERATIONS CIVIL ENGINEER SQUADRON
HURLBURT FIELD, FLORIDA

DATE: 16 JAN 2018
DESIGNED BY: D. BAGWELL
DRAWN BY: CTK
BUILDING NUMBER: 90748
PROJECT NUMBER: FTEV 16-3001
SHEET REFERENCE: E-300
SHEET NUMBER: 46 of 48

PDS KEY
1PDS = 1" PDS (CAN SERVE UP TO 2 WORKSTATIONS)
15PDS = 1.5" PDS (CAN SERVE UP TO 6 WORKSTATIONS)
2PDS = 2" PDS (CAN SERVE UP TO 10 WORKSTATIONS)
25PDS = 2.5" PDS (CAN SERVE UP TO 15 WORKSTATIONS)
3PDS = 3" PDS (CAN SERVE UP TO 22 WORKSTATIONS)
35PDS = 3.5" PDS (CAN SERVE UP TO 30 WORKSTATIONS)

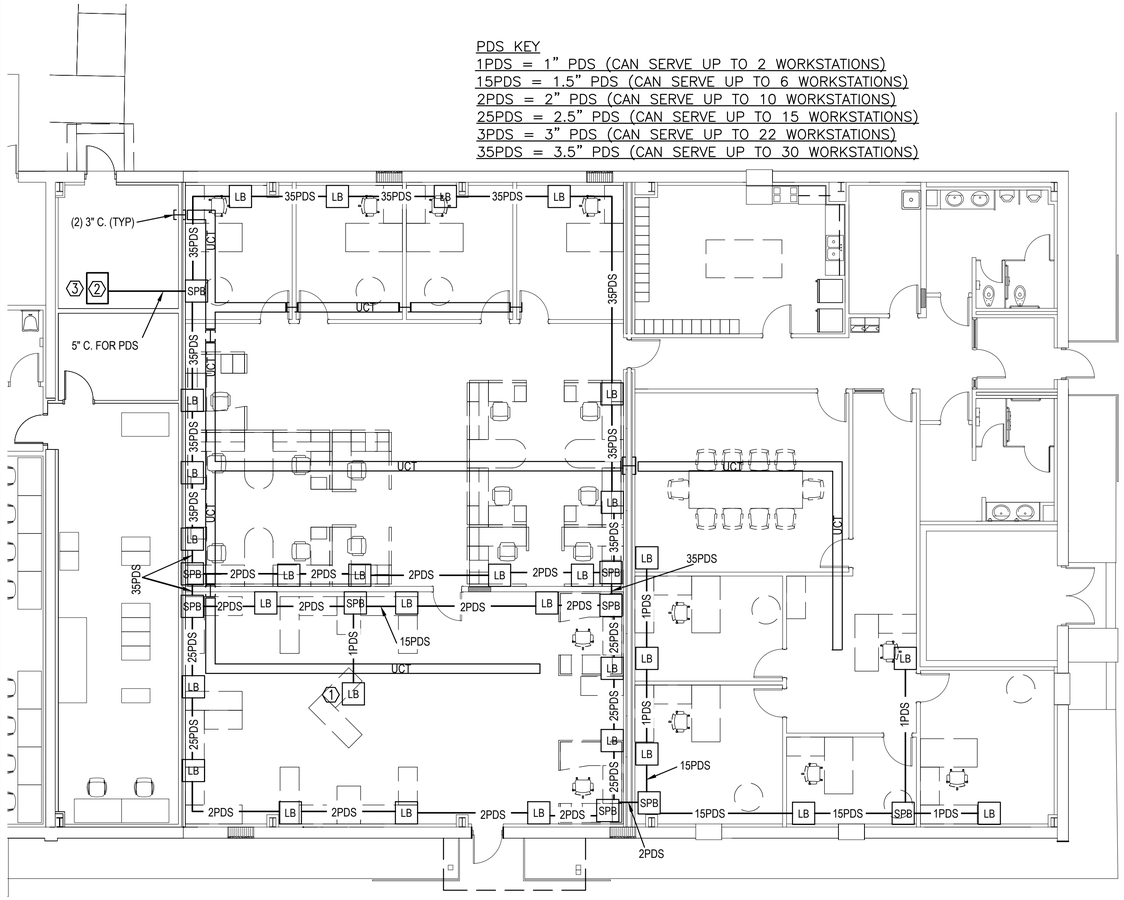

TELECOM/SECURITY RACEWAY PLAN

SCALE: 1/8" = 1'-0"

KEYNOTES:

1. APPROXIMATE LOCATION OF LOCKBOX. PROVIDE UTILITY POLE TO MOUNT LOCKBOX. EXACT LOCATION SHALL BE COORDINATED WITH USER PRIOR TO INSTALLATION.
2. PROVIDE AND INSTALL A HAMILTON IPS MODEL #54-39-24, CLASS 5, 24U RACK, INTERIOR DIMENSIONS 50.5"H x 26.25"W x 34.75D, WITH CLASS 5 HOFFMAN BOX, 19" EIA VERTICAL RACK MOUNTS. CONNECT THE PDF TO THE HOFFMAN BOX. COORDINATE THE FINAL LOCATION OF IPS CONTAINER AND INSTALLATION METHOD WITH BASE COMM PRIOR TO PERFORMING WORK.
3. IN EXISTING COMM ROOM 121 INSTALL A 1" PDS BETWEEN THE EXISTING HOFFMAN BOX AND THE NEW HOFFMAN BOX ON THE NEW IPS CONTAINER.

NEW WORK NOTES:

1. UNCLASSIFIED CABLE TRAY IS TO BE MOUNTED ABOVE ACCESSIBLE CEILING.
2. PROTECTED DISTRIBUTION SYSTEM (PDS) AND LOCKBOXES ARE TO BE CONTRACTOR PROVIDED AND INSTALLED BELOW CEILING IN ACCORDANCE WITH AFSSI 7703. THIS INCLUDES END AND JUNCTION BOXES. GOVERNMENT IS INSTALLING ALL CABLING. APPLY JB WELD AND OBTAIN FINAL APPROVAL BY THE GOVERNMENT. CABLING SHALL NOT BE INSTALLED UNTIL THE INSTALLATION IS APPROVED. LOCKBOXES MUST BE ABLE TO ACCOMMODATE A SARGENT AND GREENLEAF LOCK NSN 5340002856523.
3. INSTALL FIRE CAULK AT ALL NEW AND EXISTING PENETRATIONS INTO THE EXISTING COMMUNICATIONS ROOM.
4. COORDINATE PDS INSTALLATION WITH DISPLAY LOCATIONS IN THE CONFERENCE ROOM. AVOID CONFLICT WITH EQUIPMENT BY KEEPING CONDUITS AS HIGH ON WALL AS BASE SECURITY WILL ALLOW.
5. COORDINATE EXACT LOCATION AND MOUNTING HEIGHT OF PDS AND LOCKBOX WITH BASE SECURITY PRIOR TO INSTALLING.
6. PDS NOT MOUNTED TO WALL SHALL BE CONNECTED TO THE BUILDING STRUCTURE VIA ALL THREAD AND HANGARS. PDS SHALL NOT BE CONNECTED TO A FALSE CEILING.

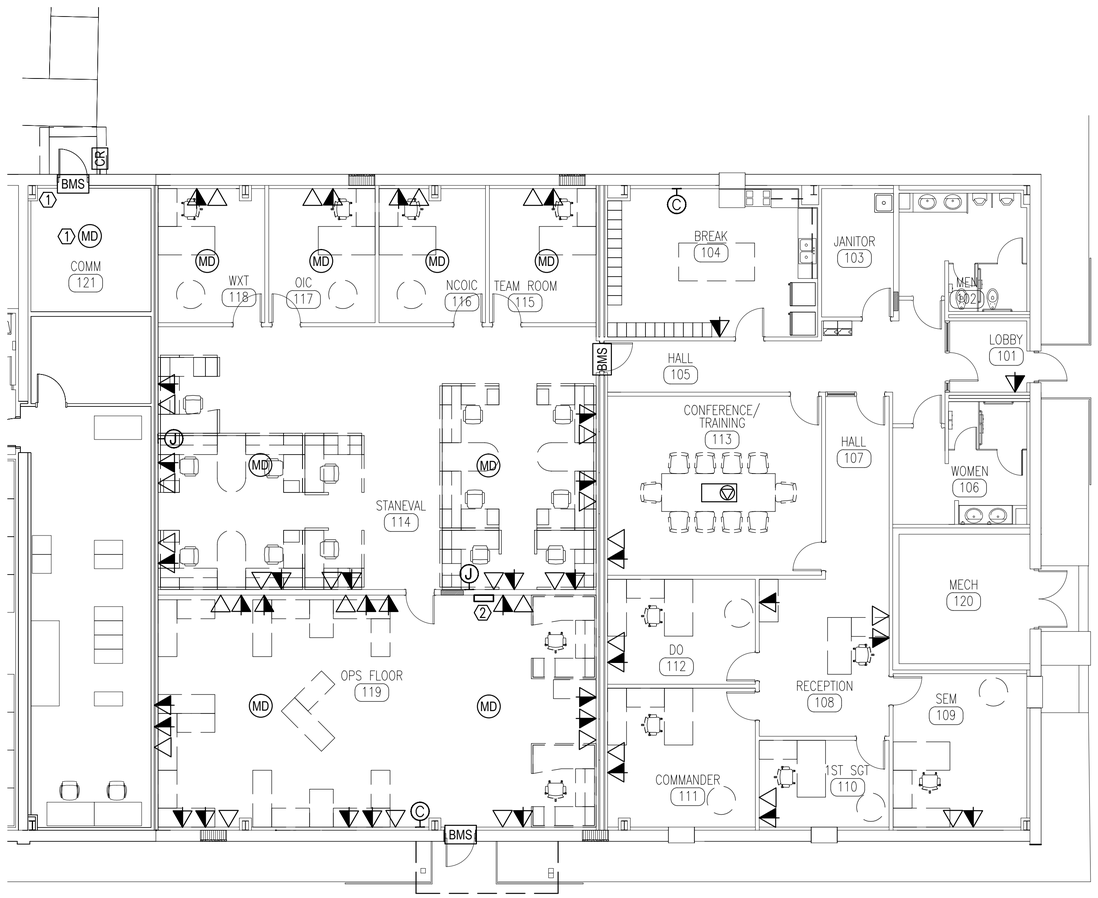

TELECOM/SECURITY FIRST FLOOR PLAN

SCALE: 1/8" = 1'-0"

KEYNOTES:

1. INTRUSION DETECTION DEVICES SHALL BE SERVED FROM GFGI IDS PANEL IN ROOM 119. INSTALL CONDUIT TO FUTURE IDS LOCATION. CONDUIT AND J-BOX SHALL BE SURFACE MOUNT IN COMM ROOM.
2. APPROXIMATE LOCATION OF GFGI IDS HEADEND PANEL. ALL IDS CONDUIT TO BE ROUTED TO THIS LOCATION. COORDINATE EXACT FINAL LOCATION OF IDS PANEL WITH GOVERNMENT PRIOR TO INSTALLATION OF CONDUITS. INSTALL A 3/4" CONDUIT WITH PULLSTRING TO COMM ROOM 121 FOR FUTURE TELEPHONE CABLE.

NEW WORK NOTES:

1. INSTALL 1" CONDUIT FROM EACH CABLE TV OUTLET JUNCTION BOX TO ACCESSIBLE CEILING SPACE.
2. PROVIDE FIRE CAULKING AS REQUIRED FOR ALL PENETRATIONS THROUGH FIRE RATED WALLS.

DAVID M. BAGWELL
No. 59251
1/5/18
STATE OF FLORIDA
PROFESSIONAL ENGINEER

100% SUBMITTAL

REV #	DATE	DESCRIPTION

REPAIR BUILDING 90748, 23 SOWS

TELECOM/SECURITY FIRST FLOOR PLAN

AIR FORCE SPECIAL OPERATIONS COMMAND
1 SPECIAL OPERATIONS CIVIL ENGINEER SQUADRON
HURLBURT FIELD, FLORIDA

DATE: 16 JAN 2018
DESIGNED BY: D. BAGWELL
DRAWN BY: CTK
BUILDING NUMBER: 90748
PROJECT NUMBER: FTEV 16-3001
SHEET REFERENCE: E-400
SHEET NUMBER: 47 of 48

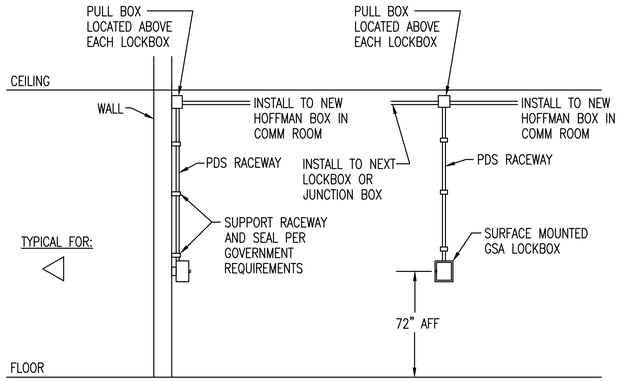

SURFACE MOUNTED PDS RACEWAY ELEVATION - ROUGH-IN

NOT TO SCALE

1. LOCKBOX MOUNTING HEIGHTS TO BE COORDINATED WITH OWNER FURNISHED FURNITURE.
2. PDS SHALL BE SURFACE MOUNTED ON WALLS/CEILINGS AND NOT COVERED BY FURNITURE.
3. LOCKBOX ON END OF RUNS DO NOT NEED A PULL BOX LOCATED ABOVE.
4. PDS WILL ATTACH TO THE WALL AS CLOSE AS POSSIBLE TO THE CEILING.

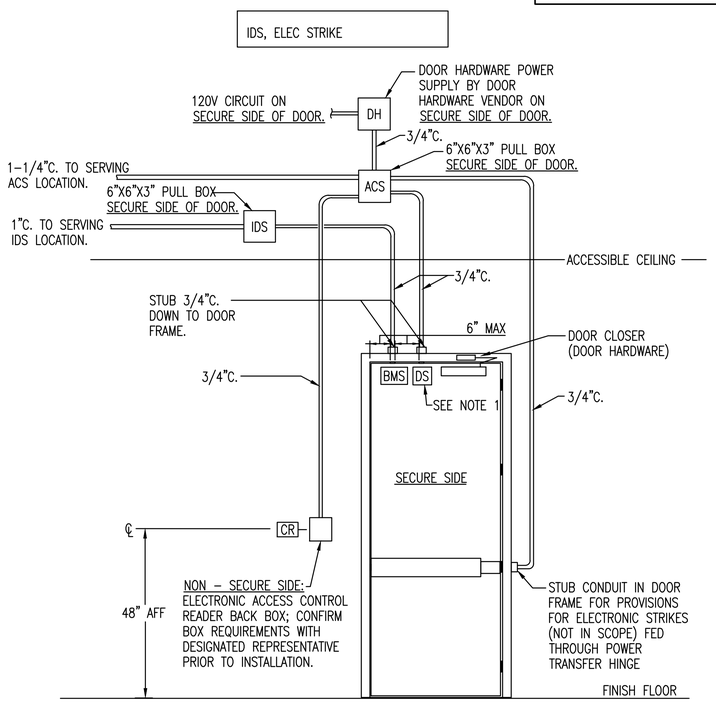

NOTES:
1. ACS DOOR POSITION SWITCH (NOT SHOWN ON PLANS FOR CLARITY)
2. ALL NOTED CONDUIT IS CONCEALED.
3. ALL NOTED ACCESSIBLE PULL BOXES AND BACK BOXES (THIS DETAIL) ARE LOCATED ON SECURE SIDE OF DOOR.
4. AS A MINIMUM, PROVIDE PULLBOX EVERY 100' OF INTERIOR CONDUIT RUNS.
5. SYSTEM COMPONENTS ARE NOT INCLUDED IN SCOPE OF WORK. CONTRACTOR SHALL ROUGH-IN PER OWNER'S ACCESS CONTROL AND SECURITY CONTRACTOR.

SECURITY DOOR ROUGH-IN ONLY DETAIL SINGLE DOOR

NOT TO SCALE

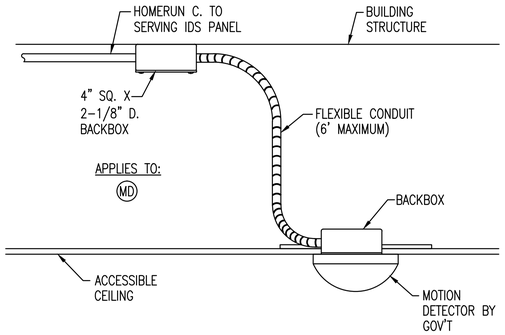

MOTION DETECTOR CEILING MOUNT DETAIL – ROUGH-IN

MOTION DETECTOR CEILING MOUNT DETAIL - ROUGH-IN

NOT TO SCALE

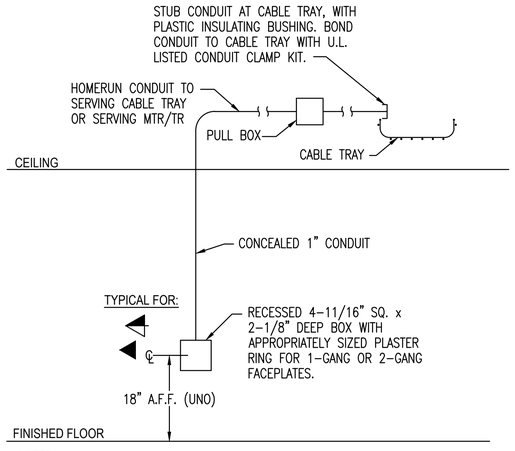

NOTES:

1. TELECOM OUTLET MOUNTING HEIGHT MAY VARY AT LOCATIONS OF FIXED CABINETS OR CASEWORK. LOCATE AND MOUNT OUTLETS AS DIRECTED BY THE TECHNICAL REPRESENTATIVE.
2. DO NOT INSTALL MORE THAN FOUR 4-PAIR CABLES IN A 1" CONDUIT.

TELECOM OUTLET MOUNTING DETAIL - DEVICE CONDUIT TO CABLE TRAY - ROUGH-IN

NOT TO SCALE

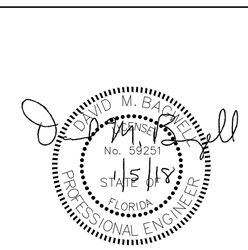

100% SUBMITTAL

REV #	DATE	DESCRIPTION

REPAIR BUILDING 90748, 23 SOWS

TELECOM/SECURITY DETAILS

AIR FORCE SPECIAL OPERATIONS COMMAND
1 SPECIAL OPERATIONS CIVIL ENGINEER SQUADRON
HURLBURT FIELD, FLORIDA

DATE: 16 JAN 2018
DESIGNED BY: D. BAGWELL
DRAWN BY: CTK
BUILDING NUMBER: 90748
PROJECT NUMBER: FTEV 16-3001
SHEET REFERENCE: E-500
SHEET NUMBER: 48 of 48